Tranquility®
Water-to-Water (TMW) Series
Submittal Data

Model TMW036 – 340
50Hz - HFC-410A

English Language/S-I Units

Rev.: 16 October, 2015

ClimateMaster works continually to improve its products. As a result, the design and specifications of each product at the time of order may be changed without notice and may not be as described herein. Please contact ClimateMaster's Customer Service Department at +1-405-745-6000 for specific information on the current design and specifications. Statements and other information contained herein are not express warranties and do not form the basis of any bargain between the parties, but are merely ClimateMaster's opinion or commendation of its products. The latest version of this document is available at **climatemaster.com**.

ClimateMaster®
Water-Source Heat Pump Systems

SUBMITTAL DATA - S-I UNITS

Unit Designation: _____

Job Name: _____

Architect: _____

Engineer: _____

Contractor: _____

PERFORMANCE DATA

Cooling Capacity: _____ kW

EER: _____

Heating Capacity: _____ kW

COP: _____

Ambient Air Temp: _____ °C

Entering Water Temp (Clg): _____ °C

Entering Air Temp (Clg): _____ °C

Entering Water Temp (Htg): _____ °C

Entering Air Temp (Htg): _____ °C

Airflow: _____ l/s

Fan Speed or Motor/RPM/Turns: _____

Operating Weight: _____ (kg)

ELECTRICAL DATA

Power Supply: _____ Volts _____ Phase _____ Hz

Minimum Circuit Ampacity: _____

Maximum Overcurrent Protection: _____

CLIMATEMASTER
Water-Source Heat Pump Systems

Table of Contents

	*Page Number
TMW Series Nomenclature	3
Performance Data	4
Performance Data - Selection Notes	5
Performance Data - TMW036 - Cooling	6
Performance Data - TMW036 - Heating	7
Performance Data - TMW060 - Cooling	9
Performance Data - TMW060 - Heating	10
Performance Data - TMW120 - Cooling	12
Performance Data - TMW120 - Heating	13
Performance Data - TMW170 - Cooling	15
Performance Data - TMW170 - Heating	16
Performance Data - TMW340 - Cooling	18
Performance Data - TMW340 - Heating	19
Antifreeze Correction Table	21
Physical & Electrical Data	22
Dimensional Data - TMW360 - 120	23
Dimensional Data - TMW170 & 340	24
TMW Series Wiring Diagram Matrix	25
Typical Wiring Diagram - Three Phase TMW036-060 Units - with CXM	26
Typical Wiring Diagram - Three Phase TMW120 Units - with CXM	27
Typical Wiring Diagram - Three Phase TMW 340 Units - with CXM	28
Typical Wiring Diagram - Three Phase TMW 340 Units - with DXM	29
Typical Wiring Diagram - Three Phase TMW 170 Units - with CXM	30
Typical Wiring Diagram - Three Phase TMW 170 Units - with DXM	31
Engineering Specifications	32
Revision History	36

*Document page number is shown next to part number (e.g. LC392 - 3 = page 3). Since not all pages are typically used in the submittals process, the page number in the lower right corner can still be used (page ____of_____).

ClimateMaster works continually to improve its products. As a result, the design and specifications of each product at the time of order may be changed without notice and may not be as described herein. Please contact ClimateMaster's Customer Service Department at +1-405-745-6000 for specific information on the current design and specifications. Statements and other information contained herein are not express warranties and do not form the basis of any bargain between the parties, but are merely ClimateMaster's opinion or commendation of its products. The latest version of this document is available at **climatemaster.com.**

CLIMATEMASTER®
Water-Source Heat Pump Systems

TMW Series Nomenclature

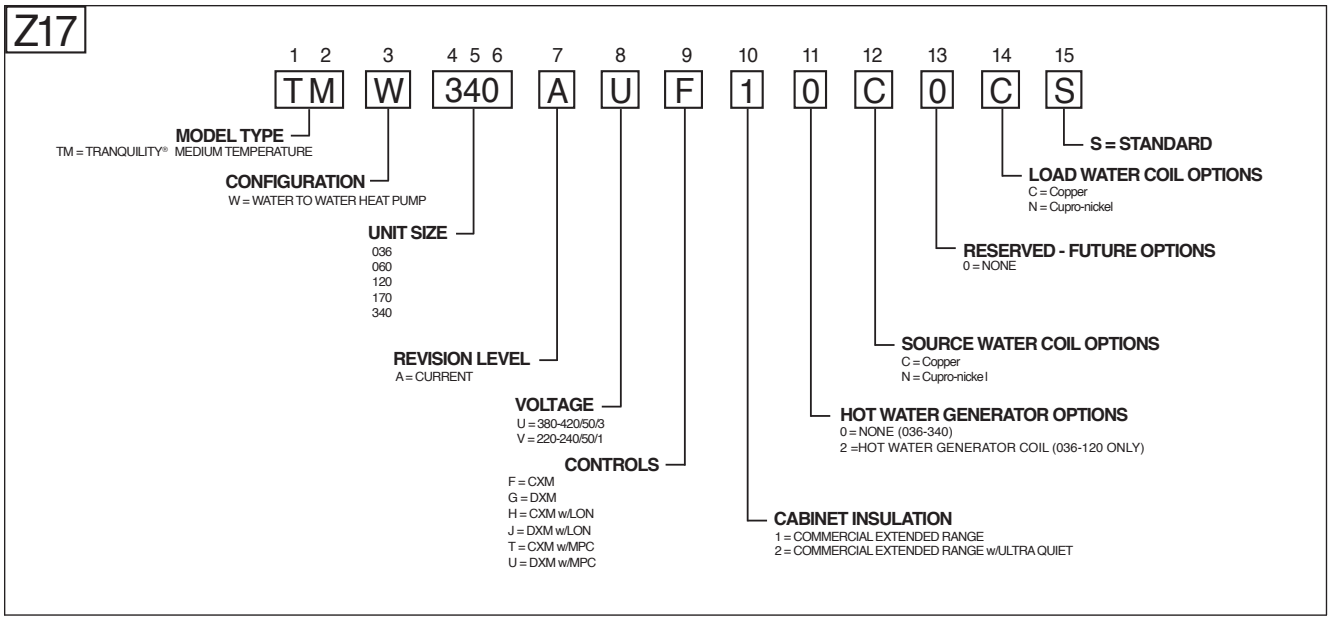

ClimateMaster works continually to improve its products. As a result, the design and specifications of each product at the time of order may be changed without notice and may not be as described herein. Please contact ClimateMaster's Customer Service Department at +1-405-745-6000 for specific information on the current design and specifications. Statements and other information contained herein are not express warranties and do not form the basis of any bargain between the parties, but are merely ClimateMaster's opinion or commendation of its products. The latest version of this document is available at **climatemaster.com.**

CLIMATEMASTER
Water-Source Heat Pump Systems

Performance Data

TMW036-340 Performance Data ASHRAE/AHRI/ISO 13256-2 50Hz English (S-I) Units

Model	Refrigerant	Water Loop Heat Pump				Ground Water Heat Pump				Ground Loop Heat Pump			
		Cooling		Heating		Cooling		Heating		Cooling		Heating	
		Indoor 12°C Outdoor 30°C		Indoor 40°C Outdoor 20°C		Indoor 12°C Outdoor 15°C		Indoor 40°C Outdoor 10°C		Indoor 12°C Outdoor 25°C		Indoor 40°C Outdoor 0°C	
		Capacity kW	EER W/W	Capacity kW	COP	Capacity kW	EER W/W	Capacity kW	COP	Capacity kW	EER W/W	Capacity kW	COP
TMW036	HFC-410A	8.64	4.64	11.32	5.20	9.71	7.31	9.28	4.27	8.91	5.32	7.14	3.27
TMW060	HFC-410A	14.39	4.87	19.37	5.30	15.50	7.18	16.00	4.30	15.12	5.89	12.81	3.40
TMW120	HFC-410A	28.78	4.87	38.75	5.30	31.01	7.18	32.01	4.30	30.25	5.89	25.62	3.40
TMW170	HFC-410A	34.13	4.30	45.92	5.00	37.28	6.41	36.71	4.08	36.82	4.99	28.89	3.18
TMW340	HFC-410A	68.23	4.30	91.56	5.00	78.45	6.38	73.15	3.97	73.81	4.99	57.34	3.18

Cooling capacities based upon 27°C DB, 19°C WB entering air temperature.
Heating capacities based upon 20°C DB, 15°C WB entering air temperature.
Ground lop heat pump ratings based on 15% methanol antifreeze solution.
All ratings based upon operation at lower voltage of dual voltage rated models.

ClimateMaster works continually to improve its products. As a result, the design and specifications of each product at the time of order may be changed without notice and may not be as described herein. Please contact ClimateMaster's Customer Service Department at +1-405-745-6000 for specific information on the current design and specifications. Statements and other information contained herein are not express warranties and do not form the basis of any bargain between the parties, but are merely ClimateMaster's opinion or commendation of its products. The latest version of this document is available at **climatemaster.com.**

CLIMATEMASTER
Water-Source Heat Pump Systems

Performance Data - Selection Notes

For operation in the shaded area when water is used in lieu of an antifreeze solution, the LWT (Leaving Water Temperature) must be calculated. Flow must be maintained to a level such that the LWT is maintained above 5°C when the JW3 jumper is not clipped (see example below). This is due to the potential of the refrigerant temperature being as low as 0°C with 5°C LWT, which may lead to a nuisance cutout due to the activation of the Low Temperature Protection. JW3 should never be clipped for standard range equipment or systems without antifreeze.

	HC kW	Power kW	HE kW	LAT °C	COP W/W
	5.46	1.75	3.70	29.6	3.11
6.68	6.07	1.78	4.30	30.7	3.42
6.97	6.31	1.79	4.52	31.1	3.53
7.16	6.43	1.79	4.64	31.3	3.59
6.72	6.80	1.81	5.00	31.9	3.77
6.89	7.08	1.82	5.26	32.4	3.89
7.12	7.23	1.82	5.40	32.7	3.96
.98	7.73	1.88	5.84	33.6	4.10
4	8.05	1.90	6.16	34.1	4.24
	8.23	1.91	6.33	34.4	4.32
	8.29	1.87	6.42	34.6	4.43
		1.89	6.77	35.2	
			6.96		

Example:

At 10°C EWT (Entering Water Temperature) and 0.28 l/s (minimum flow rate), a TS036 unit has a HE of 5.84 kW. To calculate LWT, rearrange the formula for HE as follows:

HE = TD x Flow x 4.18
where HE = Heat of Extraction (kW); TD = temperature difference (EWT - LWT); and
Flow = Water Flow Rate in l/s

TD = HE / (l/s x 4.18)
TD = 5.84 / (0.28 x 4.18)
TD = 5°C
LWT = EWT - TD
LWT = 10 - 5 = 5°C

In this example, as long as the EWT does not fall below 10°C, the system will operate as designed at 0.28 l/s. For EWTs below 10°C, higher flow rates will be required (open loop systems with EWT below 10°C, for example, require the middle flow rate).

ClimateMaster works continually to improve its products. As a result, the design and specifications of each product at the time of order may be changed without notice and may not be as described herein. Please contact ClimateMaster's Customer Service Department at +1-405-745-6000 for specific information on the current design and specifications. Statements and other information contained herein are not express warranties and do not form the basis of any bargain between the parties, but are merely ClimateMaster's opinion or commendation of its products. The latest version of this document is available at **climatemaster.com.**

CLIMATEMASTER®
Water-Source Heat Pump Systems

Performance Data - TMW036 - Cooling

Source			Load																			
EWT °C	Flow		EWT °C	Flow 0.28 L/S						Flow 0.43 l/s						Flow 0.57 l/s					
	l/s	kPa		Output kW	Input kW	HR kW	LWT °C	EER W/W	WPD kPa	Output kW	Input kW	HR kW	LWT °C	EER W/W	WPD kPa	Output kW	Input kW	HR kW	LWT °C	EER W/W	WPD kPa
10	0.28	8.6	10	8.54	1.22	7.32	2.00	6.99	4.1	9.07	1.25	7.82	4.33	7.28	9.7	9.07	1.18	7.89	5.61	7.68	9.7
			15	9.57	1.25	8.31	6.00	7.63	3.4	9.99	1.26	8.73	8.72	7.91	9.0	9.99	1.23	8.76	10.22	8.12	9.7
			20	10.20	1.23	8.97	10.22	8.29	3.4	10.78	1.28	9.50	13.28	8.43	9.0	10.78	1.30	9.48	14.83	8.32	9.0
			25	11.15	1.28	9.87	14.56	8.71	2.8	11.41	1.29	10.12	17.83	8.86	8.3	11.41	1.31	10.10	19.56	8.70	8.3
			30	11.65	1.30	10.35	19.06	8.99	2.8	11.94	1.30	10.63	22.50	9.15	8.3	11.94	1.31	10.62	24.33	9.10	8.3
	0.43	22.4	10	10.78	1.23	9.55	1.89	8.76	4.1	9.18	1.18	7.99	4.28	7.77	9.7	9.18	1.15	8.03	5.56	7.99	9.7
			15	9.70	1.19	8.51	5.89	8.16	3.4	10.12	1.20	8.92	8.67	8.45	9.0	10.12	1.22	8.90	10.17	8.28	9.7
			20	10.57	1.21	9.36	10.06	8.77	3.4	10.91	1.21	9.70	13.17	8.99	9.0	10.91	1.23	9.68	14.78	8.87	9.0
			25	11.28	1.21	10.06	14.39	9.29	2.8	11.57	1.22	10.35	17.72	9.47	8.3	11.57	1.23	10.34	19.50	9.40	8.3
			30	11.80	1.23	10.57	18.89	9.60	2.8	11.78	1.23	10.55	19.28	9.58	8.3	11.78	1.23	10.55	21.06	9.58	8.3
	0.57	39.5	10	8.75	1.09	7.66	1.78	8.03	4.1	9.31	1.11	8.20	4.17	8.41	9.7	9.31	1.15	8.16	5.50	8.11	9.7
			15	9.81	1.12	8.69	5.78	8.79	3.4	10.25	1.12	9.13	8.56	9.13	9.0	10.25	1.15	9.10	10.11	8.93	9.7
			20	10.73	1.13	9.59	9.94	9.48	3.4	11.04	1.14	9.90	13.06	9.69	9.0	11.04	1.15	9.89	14.72	9.62	9.0
			25	11.44	1.14	10.30	14.28	10.03	2.8	11.73	1.15	10.58	17.67	10.21	8.3	11.73	1.15	10.58	19.39	10.21	8.3
			30	11.96	1.16	10.81	18.78	10.35	2.8	11.94	1.16	10.78	19.22	10.32	8.3	11.94	1.15	10.79	21.00	10.40	8.3
20	0.28	6.6	10	7.97	1.57	6.40	2.50	5.09	4.1	8.49	1.57	6.93	4.67	5.42	9.7	8.49	1.60	6.89	5.89	5.31	9.7
			15	8.94	1.58	7.36	6.61	5.65	3.4	9.75	1.57	8.18	8.89	6.20	9.0	9.75	1.60	8.15	10.50	6.10	9.7
			20	10.04	1.61	8.44	10.56	6.25	3.4	10.75	1.58	9.17	13.28	6.79	9.0	10.75	1.61	9.15	15.11	6.69	9.0
			25	10.96	1.62	9.34	14.72	6.75	2.8	11.62	1.61	10.01	17.72	7.23	8.3	11.62	1.61	10.01	19.78	7.23	8.3
			30	11.78	1.64	10.14	18.94	7.18	2.8	11.94	1.62	10.32	19.50	7.39	8.3	11.94	1.61	10.33	21.67	7.43	8.3
	0.43	18.5	10	8.07	1.49	6.58	2.44	5.41	4.1	8.60	1.48	7.11	4.61	5.79	9.7	8.60	1.52	7.08	5.83	5.67	9.7
			15	9.07	1.50	7.57	6.50	6.04	3.4	9.88	1.49	8.39	8.78	6.62	9.0	9.88	1.53	8.36	10.44	6.48	9.7
			20	10.17	1.52	8.66	10.44	6.71	3.4	10.91	1.51	9.40	13.17	7.23	9.0	10.91	1.53	9.38	15.06	7.15	9.0
			25	11.09	1.54	9.55	14.56	7.20	2.8	11.78	1.53	10.25	17.67	7.72	8.3	11.78	1.53	10.25	19.72	7.72	8.3
			30	11.94	1.56	10.38	18.83	7.66	2.8	12.07	1.53	10.53	19.11	7.87	8.3	12.07	1.53	10.54	21.28	7.91	8.3
	0.57	34.1	10	8.18	1.39	6.78	2.33	5.87	4.1	8.70	1.39	7.31	4.50	6.24	9.7	8.70	1.44	7.26	5.78	6.03	9.7
			15	9.18	1.41	7.76	6.39	6.51	3.4	10.02	1.40	8.61	8.72	7.14	9.0	10.02	1.38	8.64	10.39	7.27	9.7
			20	10.31	1.43	8.88	10.33	7.22	3.4	11.04	1.42	9.62	13.11	7.78	9.0	11.04	1.43	9.61	15.00	7.74	9.0
			25	11.23	1.44	9.78	14.44	7.78	2.8	11.94	1.44	10.50	17.56	8.32	8.3	11.94	1.44	10.49	19.67	8.27	8.3
			30	12.07	1.46	10.61	18.67	8.27	2.8	12.22	1.44	10.79	19.00	8.52	8.3	12.22	1.44	10.78	21.22	8.47	8.3
30	0.28	5.3	10	7.26	1.99	5.26	3.17	3.64	4.1	7.76	2.02	5.74	5.11	3.84	9.7	7.76	2.03	5.72	6.28	3.81	9.7
			15	8.23	2.02	6.21	7.28	4.08	3.4	8.99	2.03	6.97	9.39	4.44	9.0	8.99	2.03	6.96	10.83	4.42	9.7
			20	9.39	2.03	7.35	11.17	4.62	3.4	10.12	2.04	8.08	13.67	4.96	9.0	10.12	2.03	8.09	15.39	4.98	9.0
			25	10.44	2.05	8.39	15.22	5.09	2.8	11.09	2.06	9.04	18.06	5.39	8.3	11.09	2.03	9.06	20.00	5.46	8.3
			30	11.33	2.06	9.27	19.39	5.51	2.8	11.41	2.07	9.34	19.50	5.52	8.3	11.41	2.03	9.38	21.56	5.61	8.3
	0.43	16.5	10	7.33	1.89	5.44	3.11	3.87	4.1	7.86	1.92	5.94	5.06	4.10	9.7	7.86	1.89	5.97	6.22	4.17	9.7
			15	8.33	1.91	6.42	7.17	4.36	3.4	9.10	1.92	7.18	9.28	4.74	9.0	9.10	1.89	7.21	10.78	4.82	9.7
			20	9.52	1.93	7.59	11.06	4.94	3.4	10.25	1.94	8.32	13.56	5.30	9.0	10.25	1.94	8.32	15.33	5.30	9.0
			25	10.57	1.94	8.63	15.11	5.44	2.8	11.25	1.95	9.30	17.94	5.77	8.3	11.25	1.95	9.30	19.94	5.77	8.3
			30	11.49	1.96	9.53	19.22	5.86	2.8	11.57	1.96	9.61	19.44	5.90	8.3	11.57	1.95	9.62	21.50	5.93	8.3
	0.57	30.3	10	7.44	1.77	5.67	3.00	4.20	4.1	7.97	1.80	6.16	5.00	4.42	9.7	7.97	1.80	6.16	6.17	4.42	9.7
			15	8.44	1.79	6.65	7.06	4.72	3.4	9.20	1.80	7.40	9.22	5.10	9.0	9.20	1.79	7.41	10.72	5.15	9.7
			20	9.65	1.80	7.84	10.94	5.35	3.4	10.38	1.81	8.57	13.50	5.73	9.0	10.38	1.80	8.58	15.28	5.76	9.0
			25	10.70	1.82	8.88	14.94	5.88	2.8	11.38	1.83	9.55	17.89	6.23	8.3	11.38	1.80	9.58	19.89	6.31	8.3
			30	11.62	1.84	9.78	19.06	6.33	2.8	11.70	1.84	9.86	19.33	6.37	8.3	11.70	1.80	9.89	21.39	6.48	8.3
40	0.28	4.6	10	6.41	2.50	3.91	4.00	2.56	4.1	6.86	2.55	4.31	5.67	2.69	9.7	6.86	2.53	4.33	6.72	2.71	9.7
			15	7.44	2.53	4.91	8.00	2.95	3.4	7.97	2.55	5.42	10.00	3.12	9.0	7.97	2.53	5.43	11.22	3.14	9.7
			20	8.52	2.55	5.97	12.00	3.34	3.4	9.07	2.56	6.51	14.33	3.55	9.0	9.07	2.53	6.54	15.72	3.58	9.0
			25	9.54	2.56	6.98	16.00	3.73	2.8	10.10	2.57	7.52	18.67	3.92	8.3	10.10	2.57	7.52	20.28	3.92	8.3
	0.43	13.8	10	6.52	2.27	4.25	3.89	2.87	4.1	6.99	2.30	4.69	5.61	3.03	9.7	6.99	2.31	4.68	6.61	3.02	9.7
			15	7.60	2.29	5.31	7.89	3.32	3.4	8.15	2.30	5.85	9.89	3.54	9.0	8.15	2.31	5.84	11.11	3.52	9.7
			20	8.70	2.30	6.40	11.83	3.78	3.4	9.25	2.31	6.94	14.22	4.00	9.0	9.25	2.34	6.92	15.61	3.96	9.0
			25	9.75	2.32	7.43	15.83	4.20	2.8	10.31	2.33	7.98	18.50	4.43	8.3	10.31	2.34	7.97	20.11	4.41	8.3
	0.57	27.7	10	6.57	2.23	4.34	3.83	2.95	4.1	7.02	2.27	4.75	5.56	3.09	9.7	7.02	2.29	4.73	6.61	3.07	9.7
			15	7.62	2.25	5.38	7.83	3.39	3.4	8.18	2.27	5.90	9.89	3.60	9.0	8.18	2.29	5.89	11.11	3.57	9.7
			20	8.73	2.26	6.46	11.78	3.86	3.4	9.31	2.28	7.03	14.17	4.08	9.0	9.31	2.29	7.02	15.61	4.07	9.0
			25	9.81	2.27	7.53	15.78	4.32	2.8	10.36	2.29	8.07	18.50	4.53	8.3	10.36	2.29	8.07	20.11	4.53	8.3
45	0.28	4.0	10	5.92	2.75	3.17	4.44	2.15	4.1	6.34	2.80	3.54	6.00	2.27	9.7	6.34	2.78	3.56	7.00	2.28	9.7
			15	6.99	2.77	4.22	8.56	2.52	3.4	7.44	2.80	4.64	10.44	2.66	9.0	7.44	2.78	4.66	11.56	2.68	9.7
			20	8.10	2.80	5.30	12.61	2.90	3.4	8.54	2.80	5.74	14.89	3.05	9.0	8.54	2.78	5.76	16.11	3.07	9.0
			25	9.15	2.80	6.34	16.72	3.26	2.8	9.65	2.82	6.83	19.28	3.42	8.3	9.65	2.82	6.83	20.72	3.42	8.3
	0.43	13.2	10	6.05	2.51	3.54	4.33	2.41	4.1	6.47	2.55	3.92	5.94	2.54	9.7	6.47	2.58	3.88	6.89	2.50	9.7
			15	7.12	2.53	4.59	8.33	2.81	3.4	7.57	2.55	5.02	10.28	2.97	9.0	7.57	2.58	4.99	11.33	2.93	9.7
			20	8.23	2.55	5.68	12.28	3.23	3.4	8.70	2.56	6.14	14.56	3.40	9.0	8.70	2.58	6.12	15.83	3.37	9.0
			25	9.04	2.56	6.49	15.39	3.53	2.8	9.52	2.57	6.95	17.89	3.71	8.3	9.52	2.58	6.93	19.28	3.68	8.3
	0.57	26.4	10	6.05	2.50	3.55	4.33	2.42	4.1	6.47	2.55	3.92	5.94	2.54	9.7	6.47	2.58	3.88	6.89	2.50	9.7
			15	7.12	2.53	4.60	8.33	2.82	3.4	7.60	2.55	5.05	10.28	2.98	9.0	7.60	2.58	5.01	11.33	2.94	9.7
			20	8.23	2.54	5.69	12.28	3.24	3.4	8.70	2.56	6.14	14.56	3.40	9.0	8.70	2.58	6.12	15.83	3.37	9.0
			25	9.04	2.55	6.49	15.39	3.55	2.8	9.52	2.57	6.95	17.89	3.71	8.3	9.52	2.58	6.93	19.22	3.68	8.3

Interpolation is permissible; extrapolation is not.
All entering air conditions are 27°C DB and 19°C WB in cooling and 20°C DB in heating.
AHRI/ISO certified conditions are 27°C DB and 19°C WB in cooling and 20°C DB in heating.
Table does not reflect fan or pump power corrections for AHRI/ISO conditions.
All performance data is based upon the lower voltage of dual voltage rated units.
Performance stated is at the rated power supply; performance may vary as the power supply varies from the rated.
Operation below 4°C EWT is based upon a 15% methanol antifreeze solution.
Operation below 16°C EWT requires optional insulated water/refrigerant circuit.
See performance correction tables for operating conditions other than those listed above.
Gray shaded area refers to calculations required to determine if heating water flow is sufficient for non-antifreeze systems.

ClimateMaster works continually to improve its products. As a result, the design and specifications of each product at the time of order may be changed without notice and may not be as described herein. Please contact ClimateMaster's Customer Service Department at +1-405-745-6000 for specific information on the current design and specifications. Statements and other information contained herein are not express warranties and do not form the basis of any bargain between the parties, but are merely ClimateMaster's opinion or commendation of its products. The latest version of this document is available at **climatemaster.com.**

CLIMATEMASTER®
Water-Source Heat Pump Systems

Performance Data - TMW036 - Heating

Source			Load																			
EWT °C	Flow		EWT °C	Flow 0.28 l/s						Flow 0.43 l/s						Flow 0.57 l/s					
	l/s	WPD kPa		Output kW	Input kW	HE kW	LWT °C	COP W/W	WPD kPa	Output kW	Input kW	HE kW	LWT °C	COP W/W	WPD kPa	Output kW	Input kW	HE kW	LWT °C	COP W/W	WPD kPa
-5	0.57	51.7	15	6.94	1.26	5.68	22.11	5.50	3.5	6.97	1.19	5.78	31.89	5.86	9.0	7.05	1.16	5.88	18.89	6.05	17.2
			25	6.86	1.48	5.39	31.44	4.65	2.8	6.91	1.46	5.45	29.33	4.74	8.3	6.94	1.44	5.51	28.28	4.84	15.9
			30	6.85	1.57	5.28	36.67	4.35	2.8	6.86	1.54	5.32	34.28	4.45	8.3	6.89	1.53	5.36	33.22	4.52	15.2
			35	6.70	1.97	4.74	41.28	3.41	2.1	6.73	1.86	4.87	39.17	3.62	7.6	6.76	1.81	4.94	38.17	3.73	15.2
0	0.28	11.7	15	7.33	1.25	6.08	22.44	5.85	3.5	7.36	1.19	6.17	12.44	6.19	9.0	7.39	1.16	6.23	19.03	6.39	17.2
			25	7.12	1.51	5.62	31.78	4.72	2.8	7.18	1.39	5.79	28.39	5.18	8.3	7.18	1.34	5.83	27.33	5.34	15.9
			30	7.07	1.70	5.37	36.72	4.17	2.8	7.15	1.61	5.54	34.50	4.45	8.3	7.20	1.57	5.64	33.39	4.60	15.2
			35	6.97	1.93	5.04	41.67	3.62	2.1	7.05	1.82	5.23	39.39	3.87	7.6	7.07	1.77	5.30	38.33	3.99	15.2
			45	6.86	2.41	4.45	51.44	2.85	1.4	6.89	2.28	4.61	49.28	3.02	7.6	6.86	2.22	4.64	48.22	3.09	13.1
	0.43	28.3	15	7.48	1.26	6.22	22.72	5.92	3.5	7.73	1.20	6.53	20.39	6.46	9.0	7.76	1.16	6.59	19.17	6.66	17.2
			25	7.23	1.52	5.71	32.11	4.77	2.8	7.28	1.44	5.85	29.89	5.07	8.3	7.31	1.39	5.91	28.78	5.24	15.9
			30	7.15	1.70	5.45	36.89	4.21	2.8	7.18	1.61	5.57	34.50	4.47	8.3	7.20	1.57	5.64	33.39	4.60	15.2
			35	7.07	1.93	5.14	41.67	3.67	2.1	7.10	1.82	5.28	39.44	3.90	7.6	7.12	1.77	5.35	38.33	4.02	15.2
			45	6.89	2.41	4.48	51.44	2.86	1.4	6.91	2.28	4.63	49.28	3.03	7.6	6.94	2.22	4.72	48.22	3.12	13.1
	0.57	49.0	15	7.83	1.27	6.56	22.94	6.16	3.5	7.94	1.20	6.74	20.50	6.63	9.0	7.97	1.16	6.80	19.28	6.84	17.2
			25	7.70	1.57	6.13	32.22	4.89	2.8	7.76	1.48	6.27	29.83	5.23	8.3	7.78	1.45	6.33	28.67	5.36	15.9
			30	7.60	1.76	5.83	37.11	4.31	2.8	7.65	1.66	5.99	34.78	4.60	8.3	7.68	1.62	6.05	33.61	4.73	15.2
			35	7.49	1.98	5.51	42.06	3.78	2.1	7.52	1.88	5.64	39.67	4.00	7.6	7.55	1.83	5.72	38.56	4.13	15.2
			45	7.20	2.53	4.68	51.72	2.85	1.4	7.18	2.39	4.79	49.44	3.01	7.6	7.15	2.33	4.82	48.39	3.07	13.1
5	0.28	10.3	15	8.23	1.26	6.97	23.22	6.52	3.5	8.23	1.24	6.99	-0.50	6.65	9.0	8.25	1.20	7.06	19.49	6.90	17.2
			25	8.10	1.57	6.52	32.56	5.14	2.8	8.07	1.51	6.56	24.89	5.35	8.3	8.10	1.47	6.63	23.83	5.52	15.9
			30	7.94	1.76	6.18	37.44	4.50	2.8	8.02	1.43	6.59	35.00	5.62	8.3	8.04	1.39	6.65	33.78	5.77	15.2
			35	7.81	1.98	5.82	42.33	3.93	2.1	7.89	1.67	6.21	39.89	4.71	7.6	7.89	1.62	6.26	38.72	4.86	15.2
			45	7.65	2.53	5.12	52.17	3.03	1.4	7.70	1.96	5.74	49.78	3.93	7.6	7.68	1.91	5.77	48.61	4.02	13.1
	0.43	25.5	15	8.47	1.27	7.19	23.50	6.66	3.5	8.60	1.21	7.39	20.94	7.13	9.0	8.62	1.17	7.45	19.83	7.35	17.2
			25	8.28	1.57	6.71	32.78	5.26	2.8	8.39	1.49	6.89	30.22	5.62	8.3	8.41	1.45	6.96	28.94	5.80	15.9
			30	8.18	1.77	6.40	37.72	4.62	2.8	8.25	1.68	6.57	35.11	4.91	8.3	8.28	1.63	6.65	33.89	5.07	15.2
			35	8.07	1.99	6.08	42.56	4.05	2.1	8.12	1.90	6.22	40.06	4.27	7.6	8.12	1.84	6.29	38.78	4.42	15.2
			45	7.73	2.53	5.20	52.28	3.06	1.4	7.73	2.38	5.35	49.83	3.25	7.6	7.70	2.33	5.37	48.61	3.31	13.1
	0.57	44.8	15	8.65	1.27	7.38	23.67	6.81	3.5	8.78	1.21	7.58	21.00	7.28	9.0	8.81	1.17	7.63	19.72	7.51	17.2
			25	8.47	1.58	6.88	32.94	5.35	2.8	8.57	1.49	7.08	30.33	5.74	8.3	8.60	1.46	7.14	29.06	5.89	15.9
			30	8.36	1.77	6.59	37.83	4.72	2.8	8.44	1.67	6.77	35.28	5.04	8.3	8.44	1.63	6.81	34.00	5.17	15.2
			35	8.23	1.99	6.24	42.72	4.13	2.1	8.28	1.89	6.40	40.17	4.39	7.6	8.28	1.84	6.44	38.89	4.51	15.2
			45	7.86	2.53	5.33	52.39	3.10	1.4	7.86	2.39	5.47	49.89	3.28	7.6	7.86	2.34	5.52	48.72	3.36	13.1
10	0.28	9.0	15	9.44	1.28	8.16	24.44	7.38	3.5	9.60	1.21	8.39	21.50	7.96	9.0	9.65	1.17	8.48	20.11	8.23	17.2
			25	9.23	1.58	7.65	33.72	5.83	2.8	9.36	1.50	7.86	30.83	6.24	8.3	9.39	1.46	7.93	29.39	6.43	15.9
			30	9.12	1.77	7.35	38.56	5.15	2.8	9.23	1.68	7.55	35.72	5.49	8.3	9.23	1.63	7.60	34.33	5.65	15.2
			35	8.89	1.58	7.30	33.72	5.61	2.1	9.36	1.50	7.86	30.83	6.24	7.6	9.39	1.46	7.93	29.39	6.43	15.2
			45	8.60	2.53	6.06	53.06	3.39	1.4	8.62	2.39	6.23	50.39	3.60	7.6	8.60	2.34	6.26	49.06	3.68	13.1
			50							8.39	2.67	5.71	55.22	3.14	6.2	8.36	2.60	5.76	53.94	3.22	12.4
	0.43	23.4	15	9.81	1.28	8.53	24.89	7.67	3.5	10.33	1.21	9.12	22.00	8.51	9.0	10.38	1.18	9.20	20.44	8.79	17.2
			25	9.57	1.59	7.98	34.33	6.02	2.8	10.04	1.50	8.54	31.28	6.69	8.3	10.07	1.47	8.60	29.72	6.86	15.9
			30	9.44	1.78	7.66	38.83	5.30	2.8	9.86	1.69	8.17	36.17	5.84	8.3	9.88	1.64	8.24	34.67	6.03	15.2
			35	9.23	2.01	7.22	44.00	4.59	2.1	9.65	1.90	7.75	41.00	5.07	7.6	9.67	1.85	7.82	39.56	5.22	15.2
			45	8.89	2.54	6.34	53.56	3.50	1.4	9.15	2.41	6.74	50.72	3.79	7.6	9.15	2.35	6.80	49.33	3.90	13.1
			50							8.89	2.68	6.20	55.56	3.31	6.2	8.86	2.62	6.24	54.17	3.39	12.4
	0.57	41.4	15	10.15	1.28	8.87	25.11	7.93	3.5	10.33	1.21	9.12	21.72	8.51	9.0	10.38	1.18	9.20	20.44	8.79	17.2
			25	9.91	1.59	8.32	34.39	6.23	2.8	10.04	1.50	8.54	31.56	6.69	8.3	10.10	1.47	8.63	29.72	6.88	15.9
			30	9.75	1.78	7.97	39.17	5.48	2.8	9.88	1.69	8.20	36.17	5.85	8.3	9.88	1.64	8.24	34.67	6.03	15.2
			35	9.57	2.01	7.56	44.00	4.76	2.1	9.67	1.90	7.77	41.00	5.09	7.6	9.67	1.85	7.82	39.56	5.22	15.2
			45	9.12	2.54	6.58	53.56	3.59	1.4	9.15	2.41	6.74	50.72	3.79	7.6	9.15	2.35	6.80	49.33	3.90	13.1
			50							8.89	2.68	6.20	55.56	3.31	6.2	8.86	2.62	6.24	54.17	3.39	12.4
15	0.28	8.3	15	10.17	1.29	8.89	25.33	7.90	3.5	10.36	1.21	9.14	22.00	8.54	9.0	10.38	1.18	9.20	20.44	8.79	17.2
			25	10.07	1.59	8.48	34.50	6.33	2.8	10.23	1.50	8.73	31.39	6.82	8.3	10.25	1.47	8.79	29.83	6.99	15.9
			30	9.99	1.78	8.21	39.39	5.61	2.8	10.12	1.69	8.43	36.33	5.99	8.3	10.15	1.64	8.51	34.78	6.19	15.2
			35	9.86	2.01	7.85	44.28	4.91	2.1	9.96	1.89	8.07	41.22	5.26	7.6	9.99	1.85	8.15	39.72	5.41	15.2
			45	9.52	2.54	6.97	53.94	3.74	1.4	9.54	2.40	7.14	50.94	3.97	7.6	9.54	2.35	7.20	49.50	4.07	13.1
			50							9.31	2.68	6.63	55.78	3.47	6.2	9.28	2.62	6.66	54.39	3.55	12.4
	0.43	21.4	15	10.52	1.29	9.23	25.50	8.17	3.5	11.02	1.22	9.79	22.39	9.02	9.0	11.07	1.19	9.88	20.72	9.31	17.2
			25	10.38	1.60	8.79	35.06	6.49	2.8	10.88	1.51	9.38	31.78	7.21	8.3	10.91	1.48	9.43	30.11	7.39	15.9
			30	10.31	1.79	8.52	39.61	5.77	2.8	10.75	1.70	9.06	36.72	6.33	8.3	10.78	1.65	9.13	35.06	6.54	15.2
			35	10.17	2.02	8.16	44.83	5.04	2.1	10.57	1.90	8.67	41.61	5.56	7.6	10.59	1.85	8.74	40.00	5.72	15.2
			45	9.78	2.55	7.23	54.39	3.83	1.4	10.07	2.42	7.65	51.28	4.16	7.6	10.07	2.35	7.72	49.72	4.28	13.1
			50							9.81	2.69	7.12	56.06	3.65	6.2	9.78	2.62	7.16	54.61	3.73	12.4
	0.57	38.6	15	10.83	1.29	9.54	25.72	8.41	3.5	11.04	1.22	9.82	22.44	9.04	9.0	11.09	1.19	9.91	20.72	9.33	17.2
			25	10.70	1.60	9.10	35.22	6.69	2.8	10.88	1.51	9.38	31.78	7.21	8.3	10.91	1.48	9.43	30.11	7.39	15.9
			30	10.59	1.79	8.81	39.94	5.93	2.8	10.75	1.70	9.06	36.72	6.33	8.3	10.78	1.65	9.13	35.06	6.54	15.2
			35	10.46	2.02	8.45	44.83	5.19	2.1	10.57	1.90	8.67	41.61	5.56	7.6	10.59	1.85	8.74	40.00	5.72	15.2
			45	10.02	2.55	7.47	54.39	3.93	1.4	10.10	2.42	7.68	51.28	4.17	7.6	10.10	2.35	7.74	49.72	4.29	13.1
			50							9.81	2.70	7.11	56.06	3.63	6.2	9.78	2.62	7.16	54.61	3.73	12.4

Interpolation is permissible; extrapolation is not.
All entering air conditions are 27°C DB and 19°C WB in cooling and 20°C DB in heating.
AHRI/ISO certified conditions are 27°C DB and 19°C WB in cooling and 20°C DB in heating.
Table does not reflect fan or pump power corrections for AHRI/ISO conditions.
All performance data is based upon the lower voltage of dual voltage rated units.
Performance stated is at the rated power supply; performance may vary as the power supply varies from the rated.
Operation below 4°C EWT is based upon a 15% methanol antifreeze solution.
Operation below 16°C EWT requires optional insulated water/refrigerant circuit.
See performance correction tables for operating conditions other than those listed above.
Gray shaded area refers to calculations required to determine if heating water flow is sufficient for non-antifreeze systems.

Table Continued on Next Page

ClimateMaster works continually to improve its products. As a result, the design and specifications of each product at the time of order may be changed without notice and may not be as described herein. Please contact ClimateMaster's Customer Service Department at +1-405-745-6000 for specific information on the current design and specifications. Statements and other information contained herein are not express warranties and do not form the basis of any bargain between the parties, but are merely ClimateMaster's opinion or commendation of its products. The latest version of this document is available at **climatemaster.com.**

CLIMATEMASTER
Water-Source Heat Pump Systems

Performance Data - TMW036 - Heating

Table Continued from Previous Page

Source			Load																			
EWT °C	Flow		EWT °C	Flow 0.28 l/s						Flow 0.43 l/s						Flow 0.57 l/s					
	l/s	WPD kPa		Output kW	Input kW	HE kW	LWT °C	COP W/W	WPD kPa	Output kW	Input kW	HE kW	LWT °C	COP W/W	WPD kPa	Output kW	Input kW	HE kW	LWT °C	COP W/W	WPD kPa
20	0.28	6.9	15	11.02	1.30	9.72	25.78	8.50	3.5	11.09	1.22	9.87	22.50	9.08	9.0	11.15	1.19	9.96	20.83	9.37	17.2
			25	10.94	1.60	9.34	35.28	6.84	2.8	11.12	1.51	9.61	31.89	7.37	8.3	11.15	1.48	9.67	30.22	7.55	15.9
			30	10.88	1.79	9.10	40.22	6.09	2.8	11.04	1.70	9.34	36.89	6.51	8.3	11.07	1.65	9.42	35.22	6.72	15.2
			35	10.81	2.02	8.79	45.17	5.36	2.1	10.94	1.90	9.03	41.83	5.75	7.6	10.96	1.85	9.11	40.17	5.92	15.2
			45	10.44	2.55	7.89	54.78	4.09	1.4	10.52	2.42	8.10	51.56	4.35	7.6	10.52	2.35	8.16	49.94	4.47	13.1
			50							10.25	2.69	7.56	56.39	3.81	6.2	10.23	2.62	7.60	54.83	3.90	12.4
	0.43	19.3	15	11.25	1.30	9.96	26.11	8.68	3.5	11.73	1.23	10.50	22.83	9.53	9.0	11.78	1.20	10.58	21.11	9.84	17.2
			25	11.23	1.61	9.62	35.61	6.98	2.8	11.70	1.52	10.18	32.28	7.71	8.3	11.75	1.48	10.28	30.50	7.96	15.9
			30	11.15	1.80	9.35	40.44	6.21	2.8	11.62	1.70	9.92	37.22	6.85	8.3	11.67	1.66	10.02	35.50	7.05	15.2
			35	11.07	2.03	9.04	45.67	5.46	2.1	11.49	1.91	9.58	42.17	6.01	7.6	11.51	1.86	9.65	40.39	6.19	15.2
			45	10.91	2.57	8.34	55.28	4.25	1.4	10.99	2.43	8.56	51.83	4.53	7.6	10.99	2.36	8.63	50.17	4.65	13.1
			50							10.70	2.71	7.99	56.67	3.95	6.2	10.70	2.63	8.07	55.00	4.06	12.4
	0.57	35.2	15	11.86	1.30	10.56	26.33	9.15	3.5	11.75	1.23	10.52	22.83	9.55	9.0	11.78	1.20	10.58	21.11	9.84	17.2
			25	11.51	1.62	9.90	35.83	7.13	2.8	11.70	1.52	10.18	32.28	7.71	8.3	11.75	1.48	10.28	30.50	7.96	15.9
			30	11.46	1.80	9.67	40.78	6.38	2.8	11.65	1.70	9.95	37.22	6.86	8.3	11.67	1.66	10.02	35.50	7.05	15.2
			35	11.36	2.03	9.33	45.67	5.61	2.1	11.49	1.91	9.58	42.17	6.01	7.6	11.51	1.86	9.65	40.39	6.19	15.2
			45	11.15	2.57	8.58	55.28	4.34	1.4	11.02	2.43	8.59	51.83	4.54	7.6	11.02	2.36	8.65	50.17	4.66	13.1
			50							10.70	2.71	7.99	56.67	3.95	6.2	10.70	2.63	8.07	55.00	4.06	12.4
25	0.28	6.2	15	12.01	1.30	10.71	26.50	9.21	3.5	11.96	1.23	10.73	22.94	9.73	9.0	11.94	1.20	10.74	21.17	9.97	17.2
			25	11.94	1.62	10.32	36.06	7.39	2.8	12.04	1.52	10.52	32.44	7.94	8.3	12.07	1.48	10.59	30.67	8.18	15.9
			30	11.83	1.80	10.03	41.11	6.59	2.8	11.99	1.70	10.29	37.44	7.06	8.3	12.04	1.66	10.38	35.67	7.27	15.2
			35	11.75	2.03	9.73	46.06	5.80	2.1	11.91	1.91	10.00	42.44	6.23	7.6	11.94	1.86	10.07	40.61	6.41	15.2
			45	11.38	2.56	8.82	55.67	4.45	1.4	11.46	2.43	9.04	52.17	4.72	7.6	11.49	2.36	9.13	50.39	4.86	13.1
			50							10.67	2.70	7.98	56.67	3.96	6.2	10.65	2.63	8.02	55.00	4.05	12.4
	0.43	18.6	15	12.09	1.30	10.79	26.78	9.28	3.5	12.41	1.24	11.17	23.28	10.02	9.0	12.46	1.21	11.26	21.39	10.34	17.2
			25	12.33	1.62	10.71	36.28	7.59	2.8	12.54	1.53	11.01	32.83	8.22	8.3	12.59	1.48	11.11	30.89	8.48	15.9
			30	12.30	1.80	10.50	41.28	6.82	2.8	12.51	1.71	10.81	37.78	7.34	8.3	12.57	1.66	10.90	35.89	7.55	15.2
			35	12.22	2.03	10.20	46.50	6.04	2.1	12.41	1.92	10.49	42.72	6.47	7.6	12.43	1.87	10.57	40.83	6.65	15.2
			45	11.80	2.57	9.23	56.11	4.58	1.4	11.94	2.44	9.50	52.39	4.90	7.6	11.94	2.37	9.57	50.61	5.04	13.1
			50							11.67	2.67	9.01	56.50	4.38	6.2	11.67	2.60	9.07	54.72	4.49	12.4
	0.57	33.8	15	12.17	1.30	10.87	27.00	9.34	3.5	12.41	1.24	11.17	23.28	10.02	9.0	12.46	1.21	11.26	21.39	10.34	17.2
			25	12.33	1.62	10.71	36.56	7.59	2.8	12.54	1.53	11.01	32.83	8.22	8.3	12.59	1.48	11.11	30.89	8.48	15.9
			30	12.30	1.80	10.50	41.56	6.82	2.8	12.51	1.71	10.81	37.78	7.34	8.3	12.57	1.66	10.90	35.89	7.55	15.2
			35	12.22	2.03	10.20	46.50	6.04	2.1	12.41	1.92	10.49	42.72	6.47	7.6	12.43	1.87	10.57	40.83	6.65	15.2
			45	11.80	2.57	9.23	56.11	4.58	1.4	11.94	2.44	9.50	52.39	4.90	7.6	11.94	2.37	9.57	50.61	5.04	13.1

Interpolation is permissible; extrapolation is not.
All entering air conditions are 27°C DB and 19°C WB in cooling and 20°C DB in heating.
AHRI/ISO certified conditions are 27°C DB and 19°C WB in cooling and 20°C DB in heating.
Table does not reflect fan or pump power corrections for AHRI/ISO conditions.
All performance data is based upon the lower voltage of dual voltage rated units.
Performance stated is at the rated power supply; performance may vary as the power supply varies from the rated.
Operation below 4°C EWT is based upon a 15% methanol antifreeze solution.
Operation below 16°C EWT requires optional insulated water/refrigerant circuit.
See performance correction tables for operating conditions other than those listed above.
Gray shaded area refers to calculations required to determine if heating water flow is sufficient for non-antifreeze systems.

ClimateMaster works continually to improve its products. As a result, the design and specifications of each product at the time of order may be changed without notice and may not be as described herein. Please contact ClimateMaster's Customer Service Department at +1-405-745-6000 for specific information on the current design and specifications. Statements and other information contained herein are not express warranties and do not form the basis of any bargain between the parties, but are merely ClimateMaster's opinion or commendation of its products. The latest version of this document is available at **climatemaster.com.**

CLIMATEMASTER®
Water-Source Heat Pump Systems

Performance Data - TMW060 - Cooling

Source			Load																			
EWT °C	Flow		EWT °C	Flow 0.47 l/s						Flow 0.71 l/s						Flow 0.95 l/s					
	l/s	kPa		Output kW	Input kW	HR kW	LWT °C	EER W/W	WPD kPa	Output kW	Input kW	HR kW	LWT °C	EER W/W	WPD kPa	Output kW	Input kW	HR kW	LWT °C	EER W/W	WPD kPa
10	0.47	8.2	10	13.62	1.98	15.6	2.33	6.86	9.7	14.49	1.99	16.5	4.56	7.27	24.1	14.85	2.01	16.9	5.83	7.39	42.7
			15	14.91	2.01	16.9	6.56	7.42	9.7	15.83	2.01	17.8	9.06	7.88	22.7	16.25	2.03	18.3	10.44	7.99	41.4
			20	15.88	2.03	17.9	11.06	7.81	9.0	16.88	2.03	18.9	13.67	8.30	22.1	17.32	2.05	19.4	15.11	8.45	40.0
			25	16.56	2.05	18.6	15.67	8.08	8.3	17.59	2.05	19.6	18.44	8.58	21.4	18.06	2.07	20.1	19.89	8.71	39.3
			30	16.90	2.07	19.0	20.44	8.18	8.3	17.96	2.07	20.0	23.28	8.69	20.7	18.46	2.08	20.5	24.78	8.86	37.9
	0.71	23.4	10	14.20	2.01	16.2	2.00	7.07	9.7	15.08	2.01	17.1	4.33	7.50	24.1	15.48	2.03	17.5	5.67	7.61	42.7
			15	15.35	2.03	17.4	6.33	7.58	9.7	16.30	2.03	18.3	8.89	8.05	22.7	16.75	2.04	18.8	10.33	8.20	41.4
			20	16.22	2.04	18.3	10.89	7.94	9.0	17.25	2.04	19.3	13.56	8.45	22.1	17.69	2.07	19.8	15.00	8.53	40.0
			25	16.83	2.06	18.9	16.22	8.17	8.3	17.85	2.06	19.9	18.33	8.67	21.4	18.35	2.08	20.4	19.83	8.81	39.3
			30	17.11	2.07	19.2	20.33	8.25	8.3	18.17	2.07	20.2	23.22	8.76	20.7	18.67	2.09	20.8	24.72	8.93	37.9
	0.95	42.7	10	14.75	2.03	16.8	1.67	7.28	9.7	15.67	2.03	17.7	4.11	7.74	24.1	16.09	2.05	18.1	5.44	7.85	42.7
			15	15.80	2.04	17.8	6.11	7.74	9.7	16.77	2.04	18.8	8.72	8.21	22.7	17.22	2.06	19.3	10.17	8.37	41.4
			20	16.56	2.05	18.6	10.67	8.08	9.0	17.59	2.05	19.6	13.44	8.58	22.1	18.06	2.07	20.1	14.89	8.71	40.0
			25	17.06	2.07	19.1	15.39	8.26	8.3	18.14	2.07	20.2	18.22	8.78	21.4	18.61	2.09	20.7	19.78	8.90	39.3
			30	17.30	2.07	19.4	20.22	8.34	8.3	18.38	2.08	20.5	23.11	8.82	20.7	18.88	2.10	21.0	24.67	8.99	37.9
20	0.47	52.4	10	12.75	2.45	15.2	2.83	5.20	9.7	13.54	2.45	16.0	4.94	5.52	24.1	13.91	2.48	16.4	6.11	5.62	42.7
			15	14.20	2.49	16.7	7.00	5.69	9.7	15.09	2.49	17.6	6.06	6.05	22.7	15.48	2.52	18.0	10.61	6.15	41.4
			20	15.33	2.53	17.9	11.39	6.07	9.0	16.27	2.53	18.8	9.61	6.42	22.1	16.72	2.56	19.3	15.28	6.54	40.0
			25	16.12	2.57	18.7	15.94	6.28	8.3	17.11	2.57	19.7	18.61	6.67	21.4	17.56	2.59	20.2	20.06	6.78	39.3
			30	16.51	2.60	19.1	20.72	6.35	8.3	17.54	2.60	20.1	23.44	6.75	20.7	18.01	2.62	20.6	24.94	6.86	37.9
	0.71	20.7	10	13.33	2.48	15.8	2.50	5.36	9.7	14.14	2.48	16.6	4.72	5.69	24.1	14.54	2.51	17.0	5.94	5.79	42.7
			15	14.67	2.52	17.2	6.78	5.83	9.7	16.17	2.53	18.7	8.89	6.40	22.7	16.01	2.55	18.6	10.50	6.28	41.4
			20	15.69	2.55	18.2	11.17	6.15	9.0	17.09	2.56	19.6	13.56	6.68	22.1	17.11	2.58	19.7	15.17	6.63	40.0
			25	16.40	2.58	19.0	15.78	6.35	8.3	17.40	2.59	20.0	18.50	6.72	21.4	17.88	2.62	20.5	20.00	6.83	39.3
			30	16.75	2.62	19.4	20.33	6.40	8.3	17.77	2.62	20.4	23.33	6.79	20.7	18.27	2.64	20.9	24.89	6.92	37.9
	0.95	37.9	10	13.88	2.52	16.4	2.17	5.51	9.7	14.75	2.52	17.3	4.50	5.86	24.1	15.14	2.54	17.7	5.72	5.96	42.7
			15	15.14	2.54	17.7	6.50	5.96	9.7	16.06	2.55	18.6	9.00	6.30	22.7	16.51	2.57	19.1	10.33	6.41	41.4
			20	16.06	2.57	18.6	10.94	6.24	9.0	17.06	2.57	19.6	13.61	6.63	22.1	17.51	2.60	20.1	15.06	6.74	40.0
			25	16.67	2.60	19.3	15.61	6.41	8.3	17.69	2.61	20.3	18.39	6.79	21.4	18.19	2.63	20.8	19.89	6.91	39.3
			30	16.96	2.63	19.6	20.44	6.44	8.3	18.01	2.63	20.6	23.22	6.84	20.7	18.51	2.66	21.2	24.78	6.97	37.9
30	0.47	6.2	10	12.28	3.01	15.3	3.11	4.08	9.7	12.57	3.01	15.6	5.28	4.18	24.1	12.80	3.06	15.9	6.39	4.19	42.7
			15	13.93	3.04	17.0	7.17	4.58	9.7	14.28	3.04	17.3	9.67	4.69	22.7	14.54	3.08	17.6	10.89	4.72	41.4
			20	15.25	3.08	18.3	11.39	4.95	9.0	15.59	3.08	18.7	14.17	5.06	22.1	15.91	3.12	19.0	15.50	5.09	40.0
			25	16.22	3.13	19.4	15.83	5.18	8.3	16.59	3.12	19.7	18.78	5.31	21.4	16.90	3.17	20.1	20.22	5.33	39.3
			30	16.80	3.19	20.0	20.56	5.27	8.3	17.17	3.18	20.3	23.56	5.40	20.7	17.54	3.23	20.8	25.06	5.43	37.9
	0.71	19.3	10	12.86	3.06	15.9	2.78	4.20	9.7	13.14	3.06	16.2	5.06	4.30	24.1	13.41	3.11	16.5	6.22	4.31	42.7
			15	14.43	3.08	17.5	6.89	4.68	9.7	14.75	3.08	17.8	9.94	4.78	22.7	15.04	3.13	18.2	10.72	4.80	41.4
			20	15.64	3.12	18.8	11.17	5.02	9.0	16.01	3.12	19.1	14.00	5.14	22.1	16.33	3.17	19.5	15.39	5.16	40.0
			25	16.54	3.17	19.7	15.67	5.22	8.3	16.90	3.16	20.1	18.67	5.35	21.4	17.25	3.21	20.5	20.17	5.38	39.3
			30	17.32	3.24	20.6	20.28	5.35	8.3	17.69	3.24	20.9	23.39	5.46	20.7	18.06	3.29	21.3	24.89	5.49	37.9
	0.95	35.2	10	13.43	3.11	16.5	2.44	4.32	9.7	13.72	3.11	16.8	4.83	4.42	24.1	14.01	3.16	17.2	6.06	4.44	42.7
			15	14.91	3.12	18.0	6.56	4.77	9.7	15.25	3.12	18.4	9.28	4.88	22.7	15.54	3.17	18.7	10.61	4.90	41.4
			20	16.04	3.15	19.2	10.94	5.09	9.0	16.40	3.15	19.6	13.83	5.21	22.1	16.72	3.20	19.9	15.22	5.23	40.0
			25	16.85	3.19	20.0	15.50	5.28	8.3	17.22	3.19	20.4	18.56	5.40	21.4	17.56	3.24	20.8	20.06	5.42	39.3
			30	17.32	3.25	20.6	20.22	5.34	8.3	17.69	3.24	20.9	23.39	5.46	20.7	18.06	3.29	21.3	24.89	5.49	37.9
40	0.47	5.5	10	11.07	3.78	14.8	3.78	2.93	9.7	11.23	3.78	15.0	5.78	2.97	24.1	11.38	3.85	15.2	6.89	2.95	42.7
			15	12.80	3.74	16.5	7.78	3.42	9.7	12.99	3.75	16.7	10.17	3.47	22.7	13.14	3.82	17.0	11.33	3.44	41.4
			20	14.28	3.75	18.0	11.94	3.81	9.0	14.49	3.76	18.2	14.56	3.86	22.1	14.67	3.83	18.5	15.89	3.83	40.0
			25	15.51	3.80	19.3	16.28	4.08	8.3	15.72	3.81	19.5	19.11	4.12	21.4	15.93	3.88	19.8	20.50	4.11	39.3
			30	16.46	3.90	20.4	20.72	4.22	8.3	16.67	3.90	20.6	23.72	4.27	20.7	16.90	3.98	20.9	25.22	4.25	37.9
	0.71	17.2	10	11.59	3.85	15.4	3.50	3.01	9.7	11.78	3.85	15.6	5.61	3.06	24.1	11.94	3.93	15.9	6.72	3.04	42.7
			15	13.28	3.80	17.1	7.56	3.50	9.7	13.46	3.80	17.3	10.00	3.54	22.7	13.62	3.88	17.5	11.17	3.51	41.4
			20	14.67	3.80	18.5	11.72	3.86	9.0	14.88	3.80	18.7	14.44	3.91	22.1	15.09	3.88	19.0	15.78	3.89	40.0
			25	15.85	3.85	19.7	16.11	4.12	8.3	16.06	3.85	19.9	19.00	4.17	21.4	16.27	3.93	20.2	20.44	4.14	39.3
			30	16.75	3.94	20.7	20.56	4.25	8.3	16.98	3.94	20.9	23.61	4.31	20.7	17.22	4.02	21.2	25.11	4.29	37.9
	0.95	32.4	10	12.12	3.91	16.0	3.17	3.10	9.7	12.30	3.92	16.2	5.39	3.14	24.1	12.46	3.99	16.5	6.50	3.12	42.7
			15	13.72	3.85	17.6	7.28	3.56	9.7	13.91	3.86	17.8	9.78	3.60	22.7	14.09	3.94	18.0	11.00	3.58	41.4
			20	15.06	3.85	18.9	11.50	3.92	9.0	15.27	3.85	19.1	14.28	3.96	22.1	15.48	3.93	19.4	15.61	3.94	40.0
			25	16.17	3.89	20.1	15.89	4.16	8.3	16.40	3.90	20.3	18.83	4.21	21.4	16.62	3.97	20.6	20.33	4.19	39.3
			30	17.04	3.98	21.0	20.39	4.28	8.3	17.27	3.99	21.3	23.50	4.33	20.7	17.51	4.06	21.6	25.06	4.31	37.9
45	0.47	5.5	10	10.44	4.19	14.6	4.11	2.49	9.7	10.54	4.20	14.7	6.06	2.51	24.1	10.65	4.29	14.9	7.00	2.48	42.7
			15	12.12	4.17	16.3	8.17	2.91	9.7	12.25	4.18	16.4	10.44	2.93	22.7	12.36	4.26	16.6	11.50	2.90	41.4
			20	13.64	4.18	17.8	12.33	3.26	9.0	13.80	4.19	18.0	14.83	3.29	22.1	13.93	4.27	18.2	16.11	3.26	40.0
			25	15.01	4.23	19.2	16.56	3.55	8.3	15.17	4.24	19.4	19.33	3.58	21.4	15.30	4.33	19.6	20.67	3.53	39.3
			30	16.17	4.32	20.5	20.89	3.74	8.3	16.33	4.33	20.7	23.89	3.77	20.7	16.48	4.42	20.9	25.33	3.73	37.9
	0.71	16.5	10	10.96	4.27	15.2	1.06	2.57	9.7	11.07	4.28	15.3	5.67	2.59	24.1	11.17	4.36	15.5	6.83	2.56	42.7
			15	12.59	4.24	16.8	7.94	2.97	9.7	12.70	4.25	16.9	10.11	2.99	22.7	12.83	4.34	17.2	11.39	2.96	41.4
			20	14.04	4.24	18.3	12.11	3.31	9.0	14.20	4.25	18.4	14.56	3.34	22.1	14.33	4.34	18.7	16.00	3.30	40.0
			25	15.35	4.29	19.6	16.39	3.58	8.3	15.51	4.30	19.8	19.06	3.61	21.4	15.67	4.33	20.0	20.61	3.62	39.3
			30	16.48	4.37	20.9	20.50	3.77	8.3	16.67	4.38	21.0	23.61	3.81	20.7	16.83	4.47	21.3	25.28	3.76	37.9
	0.95	31.7	10	11.49	4.35	15.8	3.50	2.64	9.7	11.59	4.36	16.0	5.67	2.66	24.1	11.70	4.45	16.2	6.67	2.63	42.7
			15	13.04	4.31	17.3	7.67	3.03	9.7	13.17	4.31	17.5	10.11	3.05	22.7	13.30	4.40	17.7	11.28	3.02	41.4
			20	14.43	4.30	18.7	11.83	3.36	9.0	14.59	4.31	18.9	14.56	3.38	22.1	14.72	4.40	19.1	15.83	3.35	40.0
			25	15.69	4.34	20.0	16.17	3.62	8.3	15.85	4.35	20.2	19.06	3.65	21.4	16.01	4.44	20.4	20.50	3.61	39.3
			30	16.80	4.42	21.2	20.56	3.80	8.3	16.98	4.43	21.4	23.61	3.84	20.7	17.14	4.52	21.7	25.17	3.79	37.9

Interpolation is permissible; extrapolation is not.
All entering air conditions are 27°C DB and 19°C WB in cooling and 20°C DB in heating.
AHRI/ISO certified conditions are 27°C DB and 19°C WB in cooling and 20°C DB in heating.
Table does not reflect fan or pump power corrections for AHRI/ISO conditions.
All performance data is based upon the lower voltage of dual voltage rated units.
Performance stated is at the rated power supply; performance may vary as the power supply varies from the rated.
Operation below 4°C EWT is based upon a 15% methanol antifreeze solution.
Operation below 16°C EWT requires optional insulated water/refrigerant circuit.
See performance correction tables for operating conditions other than those listed above.
Gray shaded area refers to calculations required to determine if heating water flow is sufficient for non-antifreeze systems.

ClimateMaster works continually to improve its products. As a result, the design and specifications of each product at the time of order may be changed without notice and may not be as described herein. Please contact ClimateMaster's Customer Service Department at +1-405-745-6000 for specific information on the current design and specifications. Statements and other information contained herein are not express warranties and do not form the basis of any bargain between the parties, but are merely ClimateMaster's opinion or commendation of its products. The latest version of this document is available at **climatemaster.com.**

CLIMATEMASTER
Water-Source Heat Pump Systems

Performance Data - TMW060 - Heating

Source			Load																			
EWT °C	Flow		EWT °C	Flow 0.47 l/s						Flow 0.71 l/s						Flow 0.95 l/s					
	l/s	WPD kPa		Output kW	Input kW	HE kW	LWT °C	COP W/W	WPD kPa	Output kW	Input kW	HE kW	LWT °C	COP W/W	WPD kPa	Output kW	Input kW	HE kW	LWT °C	COP W/W	WPD kPa
-5	0.95	49.6	15	12.43	2.24	10.2	19.44	5.55	9.7	12.43	2.23	10.2	19.25	5.59	24.1	12.43	2.21	10.2	19.06	5.62	41.4
			25	12.41	2.76	9.7	28.89	4.50	8.3	12.40	2.74	9.7	28.69	4.52	22.8	12.38	2.73	9.7	28.50	4.53	39.3
			30	12.30	3.08	9.2	33.83	3.99	8.3	12.30	3.07	9.2	33.64	4.01	22.1	12.30	3.06	9.2	33.44	4.02	37.9
			35	12.12	3.49	8.6	38.78	3.48	8.3	12.11	3.47	8.6	38.58	3.49	21.4	12.09	3.45	8.6	38.39	3.50	37.2
0	0.47	10.3	15	13.57	2.26	11.3	20.28	5.99	9.7	13.33	2.23	11.1	19.78	5.97	24.1	13.09	2.21	10.9	19.28	5.94	41.4
			25	13.59	2.78	10.8	29.72	4.89	8.3	13.37	2.75	10.6	29.22	4.87	22.8	13.14	2.71	10.4	28.72	4.84	39.3
			30	13.49	3.12	10.4	34.67	4.33	8.3	13.29	3.08	10.2	34.17	4.32	22.1	13.09	3.04	10.1	33.67	4.30	37.9
			35	13.33	3.52	9.8	39.61	3.79	8.3	13.14	3.47	9.7	39.14	3.79	21.4	12.96	3.43	9.5	38.67	3.78	37.2
			45	12.62	4.51	8.1	49.72	2.80	7.6	12.57	4.45	8.1	49.14	2.82	17.2	12.51	4.39	8.1	48.56	2.85	35.9
	0.71	27.6	15	14.70	2.28	12.4	21.11	6.45	9.7	14.70	2.25	12.4	20.42	6.54	24.1	14.70	2.21	12.5	19.72	6.64	41.4
			25	14.75	2.80	11.9	30.56	5.26	8.3	14.74	2.77	12.0	29.86	5.32	22.8	14.72	2.73	12.0	29.17	5.39	39.3
			30	14.67	3.14	11.5	35.50	4.67	8.3	14.66	3.10	11.6	34.81	4.73	22.1	14.64	3.06	11.6	34.11	4.79	37.9
			35	14.51	3.54	11.0	40.44	4.10	8.3	14.49	3.49	11.0	39.75	4.15	21.4	14.46	3.44	11.0	39.06	4.20	37.2
			45	13.96	4.53	9.4	50.22	3.08	7.6	13.91	4.46	9.4	49.56	3.11	17.2	13.85	4.40	9.5	48.89	3.15	35.9
	0.95	47.6	15	14.01	2.29	11.7	20.78	6.12	9.7	14.01	2.26	11.8	20.14	6.21	24.1	14.01	2.22	11.8	19.50	6.31	41.4
			25	14.01	2.83	11.2	30.22	4.95	8.3	14.00	2.79	11.2	29.58	5.02	22.8	13.99	2.75	11.2	28.94	5.09	39.3
			30	13.91	3.17	10.7	35.22	4.39	8.3	13.89	3.12	10.8	34.56	4.45	22.1	13.88	3.08	10.8	33.89	4.50	37.9
			35	13.72	3.57	10.2	40.17	3.85	8.3	13.70	3.52	10.2	39.50	3.89	21.4	13.67	3.47	10.2	38.83	3.94	37.2
			45	13.09	4.54	8.5	49.94	2.88	7.6	13.04	4.48	8.6	49.31	2.91	17.2	12.99	4.42	8.6	48.67	2.94	35.9
5	0.47	9.7	15	14.67	2.28	12.4	21.06	6.44	9.7	14.67	2.25	12.4	20.36	6.53	24.1	14.67	2.21	12.5	19.67	6.63	41.4
			25	14.75	2.80	11.9	30.56	5.26	8.3	14.74	2.77	12.0	29.86	5.32	22.8	14.72	2.73	12.0	29.17	5.39	39.3
			30	14.70	3.14	11.6	35.56	4.68	8.3	14.68	3.10	11.6	34.83	4.74	22.1	14.67	3.06	11.6	34.11	4.80	37.9
			35	14.59	3.54	11.0	40.50	4.12	8.3	14.56	3.49	11.1	39.78	4.17	21.4	14.54	3.44	11.1	39.06	4.22	37.2
			45	14.14	4.52	9.6	50.33	3.13	7.6	14.09	4.46	9.6	49.64	3.16	17.2	14.04	4.40	9.6	48.94	3.19	35.9
	0.71	25.5	15	16.96	2.29	14.7	21.94	7.41	9.7	16.96	2.26	14.7	21.14	7.52	24.1	16.96	2.22	14.7	20.33	7.63	41.4
			25	17.04	2.83	14.2	31.39	6.02	8.3	17.02	2.79	14.2	30.58	6.11	22.8	17.01	2.75	14.3	29.78	6.19	39.3
			30	16.93	3.17	13.8	36.33	5.35	8.3	16.92	3.12	13.8	35.56	5.42	22.1	16.90	3.08	13.8	34.78	5.50	37.9
			35	16.75	3.57	13.2	41.28	4.69	8.3	16.73	3.52	13.2	40.50	4.76	21.4	16.72	3.47	13.3	39.72	4.82	37.2
			45	16.09	4.54	11.5	51.06	3.54	7.6	16.05	4.48	11.6	50.28	3.58	17.2	16.01	4.41	11.6	49.50	3.63	35.9
	0.95	44.8	15	15.67	2.30	13.4	21.44	6.82	9.7	15.67	2.26	13.4	20.69	6.92	24.1	15.67	2.23	13.4	19.94	7.03	41.4
			25	15.67	2.85	12.8	30.89	5.51	8.3	15.66	2.81	12.8	30.14	5.57	22.8	15.64	2.77	12.9	29.39	5.64	39.3
			30	15.56	3.18	12.4	35.83	4.89	8.3	15.55	3.14	12.4	35.11	4.95	22.1	15.54	3.10	12.4	34.39	5.01	37.9
			35	15.35	3.58	11.8	40.78	4.28	8.3	15.33	3.53	11.8	40.06	4.34	21.4	15.30	3.49	11.8	39.33	4.39	37.2
			45	14.64	4.55	10.1	50.50	3.22	7.6	14.60	4.49	10.1	49.81	3.25	17.2	14.56	4.43	10.1	49.11	3.29	35.9
10	0.47	9.0	15	16.19	2.28	13.9	21.61	7.10	9.7	16.19	2.25	13.9	20.86	7.19	24.1	16.19	2.22	14.0	20.11	7.29	41.4
			25	16.33	2.81	13.5	31.11	5.80	8.3	16.31	2.78	13.5	30.36	5.88	22.8	16.30	2.74	13.6	29.61	5.95	39.3
			30	16.27	3.15	13.1	36.11	5.17	8.3	16.26	3.11	13.2	35.33	5.23	22.1	16.25	3.07	13.2	34.56	5.30	37.9
			35	16.14	3.55	12.6	41.06	4.55	8.3	16.12	3.50	12.6	40.31	4.60	21.4	16.09	3.45	12.6	39.56	4.66	37.2
			45	15.67	4.53	11.1	50.83	3.46	7.6	15.62	4.47	11.1	50.11	3.49	17.2	15.56	4.41	11.2	49.39	3.53	35.9
			50							15.38	5.08	10.3	55.78	3.03	19.3	15.27	4.94	10.3	54.33	3.09	35.2
	0.71	23.4	15	17.98	2.30	15.7	22.33	7.80	9.7	18.00	2.30	15.7	22.00	7.84	24.1	18.01	2.23	15.8	20.61	8.07	41.4
			25	17.98	2.86	15.1	31.78	6.28	8.3	18.00	2.84	15.2	31.44	6.34	22.8	18.01	2.78	15.2	30.06	6.48	39.3
			30	17.88	3.21	14.7	36.72	5.58	8.3	17.88	3.18	14.7	36.39	5.62	22.1	17.88	3.12	14.8	35.00	5.74	37.9
			35	17.67	3.61	14.1	41.61	4.90	8.3	17.65	3.58	14.1	41.33	4.93	21.4	17.64	3.51	14.1	39.94	5.03	37.2
			45	16.83	4.57	12.3	51.28	3.68	7.6	16.79	4.55	12.2	51.11	3.69	17.2	16.75	4.44	12.3	49.72	3.77	35.9
			50							16.30	5.08	11.2	55.94	3.21	19.3	16.22	4.94	11.3	54.56	3.29	35.2
	0.95	42.7	15	17.98	2.30	15.7	22.33	7.80	9.7	18.00	2.30	15.7	22.33	7.81	24.1	18.01	2.24	15.8	20.61	8.04	41.4
			25	18.01	2.86	15.1	31.78	6.29	8.3	18.01	2.86	15.1	31.78	6.29	22.8	18.01	2.78	15.2	30.06	6.48	39.3
			30	17.90	3.21	14.7	36.72	5.58	8.3	17.89	3.16	14.7	36.72	5.66	22.1	17.88	3.12	14.8	35.00	5.74	37.9
			35	17.67	3.61	14.1	41.61	4.90	8.3	17.65	3.61	14.0	41.61	4.89	21.4	17.64	3.51	14.1	40.00	5.03	37.2
			45	16.83	4.57	12.3	51.28	3.68	7.6	16.80	4.57	12.2	51.28	3.68	17.2	16.77	4.44	12.3	49.72	3.78	35.9
			50							16.30	5.08	11.2	56.11	3.21	19.3	16.22	4.94	11.3	54.56	3.29	35.2
15	0.47	8.3	15	16.93	2.30	14.6	21.89	7.35	9.7	16.93	2.28	14.7	21.11	7.44	24.1	16.93	2.25	14.7	20.33	7.54	41.4
			25	17.19	2.82	14.4	31.44	6.10	8.3	17.19	2.78	14.4	30.64	6.19	22.8	17.19	2.74	14.5	29.83	6.28	39.3
			30	17.22	3.15	14.1	36.44	5.47	8.3	17.21	3.10	14.1	35.64	5.54	22.1	17.19	3.06	14.1	34.83	5.62	37.9
			35	17.19	3.54	13.7	41.44	4.85	8.3	17.17	3.49	13.7	40.64	4.91	21.4	17.14	3.44	13.7	39.83	4.98	37.2
			45	17.01	4.53	12.5	51.39	3.76	7.6	16.98	4.46	12.5	50.58	3.80	17.2	16.96	4.40	12.6	49.78	3.85	35.9
			50							16.92	5.07	11.9	56.39	1.66	19.3	16.83	4.94	11.9	54.72	3.41	35.2
	0.71	22.1	15	18.90	2.33	16.6	22.67	8.12	9.7	18.92	2.30	16.6	21.78	8.24	24.1	18.93	2.26	16.7	20.89	8.36	41.4
			25	19.09	2.88	16.2	32.17	6.63	8.3	19.07	2.84	16.2	31.28	6.72	22.8	19.06	2.80	16.3	30.39	6.82	39.3
			30	19.06	3.22	15.8	37.17	5.91	8.3	19.05	3.18	15.9	36.28	5.99	22.1	19.03	3.13	15.9	35.39	6.08	37.9
			35	18.93	3.62	15.3	42.11	5.23	8.3	18.93	3.57	15.4	41.22	5.31	21.4	18.93	3.52	15.4	40.33	5.38	37.2
			45	18.40	4.58	13.8	51.89	4.02	7.6	18.38	4.51	13.9	51.03	4.07	17.2	18.35	4.45	13.9	50.17	4.12	35.9
			50							18.20	4.99	13.2	55.83	1.80	19.3	17.98	4.96	13.0	55.06	3.62	35.2
	0.95	40.0	15	18.93	2.33	16.6	22.67	8.13	9.7	18.94	2.30	16.6	21.78	8.25	24.1	18.95	2.26	16.7	20.89	8.38	41.4
			25	19.09	2.88	16.2	32.17	6.63	8.3	19.09	2.84	16.2	31.28	6.73	22.8	19.09	2.80	16.3	30.39	6.83	39.3
			30	19.06	3.22	15.8	37.17	5.91	8.3	19.06	3.18	15.9	36.28	6.00	22.1	19.06	3.13	15.9	35.39	6.08	37.9
			35	18.95	3.62	15.3	42.11	5.24	8.3	18.94	3.57	15.4	41.22	5.31	21.4	18.93	3.52	15.4	40.33	5.38	37.2
			45	18.43	4.58	13.9	51.94	4.03	7.6	18.39	4.51	13.9	51.06	4.07	17.2	18.35	4.45	13.9	50.17	4.12	35.9
			50													18.01	4.96	13.0	55.06	3.63	35.2

Interpolation is permissible; extrapolation is not.
All entering air conditions are 27°C DB and 19°C WB in cooling and 20°C DB in heating.
AHRI/ISO certified conditions are 27°C DB and 19°C WB in cooling and 20°C DB in heating.
Table does not reflect fan or pump power corrections for AHRI/ISO conditions.
All performance data is based upon the lower voltage of dual voltage rated units.
Performance stated is at the rated power supply; performance may vary as the power supply varies from the rated.
Operation below 4°C EWT is based upon a 15% methanol antifreeze solution.
Operation below 16°C EWT requires optional insulated water/refrigerant circuit.
See performance correction tables for operating conditions other than those listed above.
Gray shaded area refers to calculations required to determine if heating water flow is sufficient for non-antifreeze systems.

Table Continued on Next Page

ClimateMaster works continually to improve its products. As a result, the design and specifications of each product at the time of order may be changed without notice and may not be as described herein. Please contact ClimateMaster's Customer Service Department at +1-405-745-6000 for specific information on the current design and specifications. Statements and other information contained herein are not express warranties and do not form the basis of any bargain between the parties, but are merely ClimateMaster's opinion or commendation of its products. The latest version of this document is available at **climatemaster.com.**

CLIMATEMASTER
Water-Source Heat Pump Systems

Performance Data - TMW060 - Heating

Table Continued from Previous Page

Source			Load																			
EWT °C	Flow		EWT °C	Flow 0.47 l/s						Flow 0.71 l/s						Flow 0.95 l/s					
	l/s	WPD kPa		Output kW	Input kW	HE kW	LWT °C	COP W/W	WPD kPa	Output kW	Input kW	HE kW	LWT °C	COP W/W	WPD kPa	Output kW	Input kW	HE kW	LWT °C	COP W/W	WPD kPa
20	0.47	7.6	15	17.67	2.32	15.3	22.22	7.61	9.7	17.7	2.29	15.4	21.39	7.71	24.1	17.69	2.26	15.4	20.56	7.82	41.4
			25	18.03	2.82	15.2	31.78	6.39	8.3	18.0	2.78	15.3	30.94	6.48	22.8	18.03	2.75	15.3	30.11	6.57	39.3
			30	18.17	3.14	15.0	36.83	5.78	8.3	18.2	3.10	15.1	35.97	5.86	22.1	18.14	3.06	15.1	35.11	5.93	37.9
			35	18.24	3.53	14.7	41.83	5.16	8.3	18.2	3.49	14.7	40.97	5.23	21.4	18.22	3.44	14.8	40.11	5.30	37.2
			45	18.38	4.52	13.9	51.89	4.07	7.6	18.4	4.46	13.9	51.03	4.12	17.2	18.32	4.40	13.9	50.17	4.17	35.9
			50													18.38	4.93	13.4	55.17	3.73	35.2
	0.71	20.7	15	18.77	2.33	16.4	22.61	8.06	9.7	18.8	2.30	16.5	21.72	8.17	24.1	18.80	2.27	16.5	20.83	8.28	41.4
			25	19.09	2.85	16.2	32.17	6.69	8.3	19.1	2.82	16.3	31.28	6.78	22.8	19.11	2.78	16.3	30.39	6.88	39.3
			30	19.19	3.19	16.0	37.22	6.02	8.3	19.2	3.14	16.0	36.31	6.10	22.1	19.19	3.10	16.1	35.39	6.19	37.9
			35	19.24	3.58	15.7	42.22	5.37	8.3	19.2	3.53	15.7	41.33	5.44	21.4	19.22	3.49	15.7	40.44	5.51	37.2
			45	19.19	4.56	14.6	52.22	4.21	7.6	19.2	4.50	14.7	51.31	4.26	17.2	19.14	4.44	14.7	50.39	4.31	35.9
			50													19.09	4.95	14.1	55.39	3.85	35.2
	0.95	37.9	15	19.87	2.35	17.5	23.06	8.47	9.7	19.9	2.31	17.6	22.11	8.60	24.1	19.90	2.28	17.6	21.17	8.73	41.4
			25	20.16	2.89	17.3	32.56	6.99	8.3	20.2	2.85	17.3	31.64	7.09	22.8	20.16	2.80	17.4	30.72	7.19	39.3
			30	20.22	3.23	17.0	37.61	6.26	8.3	20.2	3.19	17.0	36.67	6.35	22.1	20.22	3.14	17.1	35.72	6.44	37.9
			35	20.24	3.63	16.6	42.61	5.57	8.3	20.2	3.58	16.6	41.67	5.65	21.4	20.22	3.53	16.7	40.72	5.72	37.2
			45	20.03	4.59	15.4	52.50	4.36	7.6	20.0	4.53	15.5	51.56	4.42	17.2	19.98	4.47	15.5	50.61	4.47	35.9
			50													19.80	4.98	14.8	55.61	3.98	35.2
25	0.47	6.9	15	18.40	2.35	16.1	22.44	7.85	9.7	18.4	2.31	16.1	21.61	7.96	24.1	18.43	2.28	16.1	20.78	8.08	41.4
			25	18.90	2.82	16.1	32.11	6.70	8.3	18.9	2.78	16.1	31.22	6.79	22.8	18.90	2.75	16.2	30.33	6.88	39.3
			30	19.11	3.14	16.0	37.17	6.09	8.3	19.1	3.10	16.0	36.28	6.17	22.1	19.11	3.06	16.1	35.39	6.25	37.9
			35	19.30	3.53	15.8	42.28	5.47	8.3	19.3	3.48	15.8	41.36	5.55	21.4	19.27	3.43	15.8	40.44	5.62	37.2
			45	19.74	4.51	15.2	52.44	4.38	7.6	19.7	4.45	15.3	51.50	4.43	17.2	19.66	4.39	15.3	50.56	4.48	35.9
			50													19.93	4.92	15.0	55.61	4.05	35.2
	0.71	20.0	15	19.61	2.35	17.3	22.94	8.33	9.7	19.6	2.32	17.3	22.00	8.46	24.1	19.64	2.29	17.4	21.06	8.58	41.4
			25	20.06	2.86	17.2	32.50	7.01	8.3	20.1	2.82	17.3	31.58	7.12	22.8	20.09	2.78	17.3	30.67	7.23	39.3
			30	20.27	3.19	17.1	37.61	6.35	8.3	20.3	3.14	17.1	36.67	6.44	22.1	20.24	3.10	17.1	35.72	6.53	37.9
			35	20.37	3.58	16.8	42.72	5.69	8.3	20.4	3.53	16.9	41.75	5.77	21.4	20.40	3.49	16.9	40.78	5.85	37.2
			45	20.69	4.56	16.1	52.78	4.54	7.6	20.7	4.50	16.2	51.81	4.59	17.2	20.64	4.44	16.2	50.83	4.65	35.9
			50													21.58	4.96	16.6	55.83	4.35	35.2
	0.95	37.2	15	20.82	2.36	18.5	23.39	8.82	9.7	20.8	2.33	18.5	22.39	8.95	24.1	20.85	2.30	18.6	21.39	9.08	41.4
			25	21.22	2.90	18.3	32.94	7.31	8.3	21.2	2.86	18.4	31.97	7.42	22.8	21.24	2.82	18.4	31.00	7.53	39.3
			30	21.40	3.24	18.2	38.06	6.61	8.3	21.4	3.19	18.2	37.06	6.70	22.1	21.37	3.15	18.2	36.06	6.79	37.9
			35	21.50	3.64	17.9	43.11	5.91	8.3	21.5	3.59	17.9	42.08	5.99	21.4	21.50	3.54	18.0	41.06	6.07	37.2
			45	21.64	4.61	17.0	53.11	4.69	7.6	21.6	4.55	17.1	52.08	4.75	17.2	21.58	4.49	17.1	51.06	4.81	35.9
			50													21.58	5.00	16.6	56.06	4.32	35.2

Interpolation is permissible; extrapolation is not.
All entering air conditions are 27°C DB and 19°C WB in cooling and 20°C DB in heating.
AHRI/ISO certified conditions are 27°C DB and 19°C WB in cooling and 20°C DB in heating.
Table does not reflect fan or pump power corrections for AHRI/ISO conditions.
All performance data is based upon the lower voltage of dual voltage rated units.
Performance stated is at the rated power supply; performance may vary as the power supply varies from the rated.
Operation below 4°C EWT is based upon a 15% methanol antifreeze solution.
Operation below 16°C EWT requires optional insulated water/refrigerant circuit.
See performance correction tables for operating conditions other than those listed above.
Gray shaded area refers to calculations required to determine if heating water flow is sufficient for non-antifreeze systems.

ClimateMaster works continually to improve its products. As a result, the design and specifications of each product at the time of order may be changed without notice and may not be as described herein. Please contact ClimateMaster's Customer Service Department at +1-405-745-6000 for specific information on the current design and specifications. Statements and other information contained herein are not express warranties and do not form the basis of any bargain between the parties, but are merely ClimateMaster's opinion or commendation of its products. The latest version of this document is available at **climatemaster.com.**

CLIMATEMASTER®
Water-Source Heat Pump Systems

Performance Data - TMW120 - Cooling

Source			Load																			
EWT °C	Flow		EWT °C	Flow 0.95 L/S						Flow 1.42 l/s						Flow 1.89 l/s					
	l/s	kPa		Output kW	Input kW	HR kW	LWT °C	EER W/W	WPD kPa	Output kW	Input kW	HR kW	LWT °C	EER W/W	WPD kPa	Output kW	Input kW	HR kW	LWT °C	EER W/W	WPD kPa
10	0.95	9.7	10	27.24	3.97	31.2	2.33	6.86	10.3	28.97	3.99	32.96	4.56	7.27	26.2	29.71	4.02	33.73	5.83	7.39	46.9
			15	29.81	4.02	33.8	6.56	7.42	10.3	31.65	4.02	35.67	9.06	7.88	25.5	32.49	4.07	36.56	10.44	7.99	45.5
			20	31.76	4.07	35.8	11.06	7.81	9.7	33.76	4.07	37.82	13.67	8.30	24.1	34.65	4.10	38.75	15.11	8.45	44.1
			25	33.12	4.10	37.2	15.67	8.08	9.7	35.18	4.10	39.28	18.44	8.58	23.4	36.12	4.15	40.27	19.89	8.71	42.8
			30	33.81	4.13	37.9	20.44	8.18	9.7	35.91	4.13	40.04	23.28	8.69	22.8	36.91	4.17	41.08	24.78	8.86	42.1
	1.42	26.2	10	28.39	4.02	32.4	2.00	7.07	10.3	30.15	4.02	34.17	4.33	7.50	26.2	30.97	4.07	35.04	5.67	7.61	46.9
			15	30.71	4.05	34.8	6.33	7.58	10.3	32.60	4.05	36.65	8.89	8.05	25.5	33.49	4.08	37.58	10.33	8.20	45.5
			20	32.44	4.08	36.5	10.89	7.94	9.7	34.49	4.08	38.58	13.56	8.45	24.1	35.39	4.15	39.54	15.00	8.53	44.1
			25	33.65	4.12	37.8	16.22	8.17	9.7	35.70	4.12	39.82	18.33	8.67	23.4	36.70	4.17	40.87	19.83	8.81	42.8
			30	34.23	4.15	38.4	20.33	8.25	9.7	36.33	4.15	40.48	23.22	8.76	22.8	37.33	4.18	41.51	24.72	8.93	42.1
	1.89	26.2	10	29.50	4.05	33.5	1.67	7.28	10.3	31.34	4.05	35.39	4.11	7.74	26.2	32.18	4.10	36.28	5.44	7.85	46.9
			15	31.60	4.08	35.7	6.11	7.74	10.3	33.55	4.08	37.63	8.72	8.21	25.5	34.44	4.12	38.56	10.17	8.37	45.5
			20	33.12	4.10	37.2	10.67	8.08	9.7	35.18	4.10	39.28	13.44	8.58	24.1	36.12	4.15	40.27	14.89	8.71	44.1
			25	34.12	4.13	38.3	15.39	8.26	9.7	36.28	4.13	40.41	18.22	8.78	23.4	37.23	4.18	41.41	19.78	8.90	42.8
			30	34.60	4.15	38.7	20.22	8.34	9.7	36.75	4.17	40.92	23.11	8.82	22.8	37.75	4.20	41.95	24.67	8.99	42.1
20	0.95	8.3	10	25.50	4.90	30.4	2.83	5.20	10.3	27.08	4.90	31.98	4.94	5.52	26.2	27.81	4.95	32.77	6.11	5.62	46.9
			15	28.39	4.99	33.4	7.00	5.69	10.3	30.18	4.99	35.17	6.06	6.05	25.5	30.97	5.03	36.00	10.61	6.15	45.5
			20	30.65	5.05	35.7	11.39	6.07	9.7	32.55	5.07	37.61	9.61	6.42	24.1	33.44	5.12	38.56	15.28	6.54	44.1
			25	32.23	5.13	37.4	15.94	6.28	9.7	34.23	5.13	39.36	18.61	6.67	23.4	35.12	5.18	40.31	20.06	6.78	42.8
			30	33.02	5.20	38.2	20.72	6.35	9.7	35.07	5.20	40.27	23.44	6.75	22.8	36.02	5.25	41.26	24.94	6.86	42.1
	1.42	22.8	10	26.66	4.97	31.6	2.50	5.36	10.3	28.29	4.97	33.26	4.72	5.69	26.2	29.08	5.02	34.09	5.94	5.79	46.9
			15	29.34	5.03	34.4	6.78	5.83	10.3	32.34	5.05	37.39	8.89	6.40	25.5	32.02	5.10	37.12	10.50	6.28	45.5
			20	31.39	5.10	36.5	11.17	6.15	9.7	34.18	5.12	39.29	13.56	6.68	24.1	34.23	5.17	39.40	15.17	6.63	44.1
			25	32.81	5.17	38.0	15.78	6.35	9.7	34.81	5.18	39.99	18.50	6.72	23.4	35.75	5.23	40.99	20.00	6.83	42.8
			30	33.49	5.23	38.7	20.33	6.40	9.7	35.54	5.23	40.78	23.33	6.79	22.8	36.54	5.28	41.82	24.89	6.92	42.1
	1.89	42.1	10	27.76	5.03	32.8	2.17	5.51	10.3	29.50	5.03	34.53	4.50	5.86	26.2	30.29	5.08	35.37	5.72	5.96	46.9
			15	30.29	5.08	35.4	6.50	5.96	10.3	32.13	5.10	37.23	9.00	6.30	25.5	33.02	5.15	38.17	10.33	6.41	45.5
			20	32.13	5.15	37.3	10.94	6.24	9.7	34.12	5.15	39.27	13.61	6.63	24.1	35.02	5.20	40.22	15.06	6.74	44.1
			25	33.34	5.20	38.5	15.61	6.41	9.7	35.39	5.22	40.60	18.39	6.79	23.4	36.38	5.26	41.65	19.89	6.91	42.8
			30	33.91	5.26	39.2	20.44	6.44	9.7	36.02	5.26	41.28	23.22	6.84	22.8	37.02	5.31	42.33	24.78	6.97	42.1
30	0.95	6.9	10	24.55	6.02	30.6	3.11	4.08	10.3	25.13	6.02	31.15	5.28	4.18	26.2	25.61	6.12	31.72	6.39	4.19	46.9
			15	27.87	6.08	34.0	7.17	4.58	10.3	28.55	6.08	34.63	9.67	4.69	25.5	29.08	6.17	35.24	10.89	4.72	45.5
			20	30.50	6.17	36.7	11.39	4.95	9.7	31.18	6.17	37.35	14.17	5.06	24.1	31.81	6.25	38.06	15.50	5.09	44.1
			25	32.44	6.26	38.7	15.83	5.18	9.7	33.18	6.25	39.43	18.78	5.31	23.4	33.81	6.35	40.16	20.22	5.33	42.8
			30	33.60	6.38	40.0	20.56	5.27	9.7	34.33	6.36	40.70	23.56	5.40	22.8	35.07	6.46	41.53	25.06	5.43	42.1
	1.42	20.7	10	25.71	6.12	31.8	2.78	4.20	10.3	26.29	6.12	32.41	5.06	4.30	26.2	26.82	6.22	33.03	6.22	4.31	46.9
			15	28.87	6.17	35.0	6.89	4.68	10.3	29.50	6.17	35.66	9.94	4.78	25.5	30.08	6.26	36.34	10.72	4.80	45.5
			20	31.28	6.23	37.5	11.17	5.02	9.7	32.02	6.23	38.25	14.00	5.14	24.1	32.65	6.33	38.98	15.39	5.16	44.1
			25	33.07	6.33	39.4	15.67	5.22	9.7	33.81	6.31	40.12	18.67	5.35	23.4	34.49	6.41	40.90	20.17	5.38	42.8
			30	34.65	6.48	41.1	20.28	5.35	9.7	35.39	6.48	41.86	23.39	5.46	22.8	36.12	6.58	42.70	24.89	5.49	42.1
	1.89	38.6	10	26.87	6.22	33.1	2.44	4.32	10.3	27.45	6.22	33.66	4.83	4.42	26.2	28.02	6.31	34.34	6.06	4.44	46.9
			15	29.81	6.25	36.1	6.56	4.77	10.3	30.50	6.25	36.74	9.28	4.88	25.5	31.07	6.35	37.42	10.61	4.90	45.5
			20	32.07	6.30	38.4	10.94	5.09	9.7	32.81	6.30	39.11	13.83	5.21	24.1	33.44	6.40	39.84	15.22	5.23	44.1
			25	33.70	6.38	40.1	15.50	5.28	9.7	34.44	6.38	40.82	18.56	5.40	23.4	35.12	6.48	41.60	20.06	5.42	42.8
			30	34.65	6.49	41.1	20.22	5.34	9.7	35.39	6.48	41.86	23.39	5.46	22.8	36.12	6.58	42.70	24.89	5.49	42.1
40	0.95	6.2	10	22.14	7.56	29.7	3.78	2.93	10.3	22.45	7.56	30.01	5.78	2.97	26.2	22.77	7.71	30.47	6.89	2.95	46.9
			15	25.61	7.48	33.1	7.78	3.42	10.3	25.97	7.49	33.47	10.17	3.47	25.5	26.29	7.64	33.93	11.33	3.44	45.5
			20	28.55	7.49	36.0	11.94	3.81	9.7	28.97	7.51	36.48	14.56	3.86	24.1	29.34	7.66	37.00	15.89	3.83	44.1
			25	31.02	7.61	38.6	16.28	4.08	9.7	31.44	7.63	39.07	19.11	4.12	23.4	31.86	7.76	39.62	20.50	4.11	42.8
			30	32.91	7.81	40.7	20.72	4.22	9.7	33.34	7.81	41.14	23.72	4.27	22.8	33.81	7.95	41.76	25.22	4.25	42.1
	1.42	19.3	10	23.19	7.69	30.9	3.50	3.01	10.3	23.56	7.71	31.26	5.61	3.06	26.2	23.87	7.86	31.73	6.72	3.04	46.9
			15	26.55	7.59	34.1	7.56	3.50	10.3	26.92	7.61	34.53	10.00	3.54	25.5	27.24	7.76	34.99	11.17	3.51	45.5
			20	29.34	7.59	36.9	11.72	3.86	9.7	29.76	7.61	37.37	14.44	3.91	24.1	30.18	7.76	37.94	15.78	3.89	44.1
			25	31.71	7.69	39.4	16.11	4.12	9.7	32.13	7.71	39.83	19.00	4.17	23.4	32.55	7.86	40.40	20.44	4.14	42.8
			30	33.49	7.89	41.4	20.56	4.25	9.7	33.97	7.89	41.85	23.61	4.31	22.8	34.44	8.04	42.48	25.11	4.29	42.1
	1.89	35.9	10	24.24	7.82	32.1	3.17	3.10	10.3	24.61	7.84	32.45	5.39	3.14	26.2	24.92	7.99	32.91	6.50	3.12	46.9
			15	27.45	7.71	35.2	7.28	3.56	10.3	27.81	7.72	35.54	9.78	3.60	25.5	28.18	7.87	36.05	11.00	3.58	45.5
			20	30.13	7.69	37.8	11.50	3.92	9.7	30.55	7.71	38.26	14.28	3.96	24.1	30.97	7.86	38.82	15.61	3.94	44.1
			25	32.34	7.77	40.1	15.89	4.16	9.7	32.81	7.79	40.60	18.83	4.21	23.4	33.23	7.94	41.17	20.33	4.19	42.8
			30	34.07	7.95	42.0	20.39	4.28	9.7	34.54	7.97	42.51	23.50	4.33	22.8	35.02	8.12	43.14	25.06	4.31	42.1
45	0.95	5.5	10	20.87	8.38	29.3	4.11	2.49	10.3	21.08	8.40	29.48	6.06	2.51	26.2	21.29	8.58	29.87	7.00	2.48	46.9
			15	24.24	8.33	32.6	8.17	2.91	10.3	24.50	8.36	32.87	10.44	2.93	25.5	24.71	8.53	33.24	11.50	2.90	45.5
			20	27.29	8.36	35.7	12.33	3.26	9.7	27.60	8.38	35.98	14.83	3.29	24.1	27.87	8.54	36.41	16.11	3.26	44.1
			25	30.02	8.46	38.5	16.56	3.55	9.7	30.34	8.48	38.82	19.33	3.58	23.4	30.60	8.66	39.26	20.67	3.53	42.8
			30	32.34	8.64	41.0	20.89	3.74	9.7	32.65	8.66	41.31	23.89	3.77	22.8	32.97	8.84	41.81	25.33	3.73	42.1
	1.42	18.6	10	21.93	8.54	30.5	1.06	2.57	10.3	22.14	8.56	30.70	5.67	2.59	26.2	22.35	8.72	31.07	6.83	2.56	46.9
			15	25.19	8.48	33.7	7.94	2.97	10.3	25.40	8.50	33.89	10.11	2.99	25.5	25.66	8.68	34.33	11.39	2.96	45.5
			20	28.08	8.48	36.6	12.11	3.31	9.7	28.39	8.50	36.89	14.56	3.34	24.1	28.66	8.68	37.33	16.00	3.30	44.1
			25	30.71	8.58	39.3	16.39	3.58	9.7	31.02	8.59	39.62	19.06	3.61	23.4	31.34	8.66	40.00	20.61	3.62	42.8
			30	32.97	8.74	41.7	20.50	3.77	9.7	33.34	8.76	42.09	23.61	3.81	22.8	33.65	8.94	42.59	25.28	3.76	42.1
	1.89	35.2	10	22.98	8.71	31.7	3.50	2.64	10.3	23.19	8.72	31.91	5.67	2.66	26.2	23.40	8.91	32.30	6.67	2.63	46.9
			15	26.08	8.61	34.7	7.67	3.03	10.3	26.34	8.63	34.97	10.11	3.05	25.5	26.61	8.81	35.41	11.28	3.02	45.5
			20	28.87	8.59	37.5	11.83	3.36	9.7	29.18	8.63	37.81	14.56	3.38	24.1	29.44	8.79	38.23	15.83	3.35	44.1
			25	31.39	8.68	40.1	16.17	3.62	9.7	31.71	8.69	40.40	19.06	3.65	23.4	32.02	8.87	40.89	20.50	3.61	42.8
			30	33.60	8.84	42.4	20.56	3.80	9.7	33.97	8.86	42.82	23.61	3.84	22.8	34.28	9.04	43.32	25.17	3.79	42.1

Interpolation is permissible; extrapolation is not.
All entering air conditions are 27°C DB and 19°C WB in cooling and 20°C DB in heating.
AHRI/ISO certified conditions are 27°C DB and 19°C WB in cooling and 20°C DB in heating.
Table does not reflect fan or pump power corrections for AHRI/ISO conditions.
All performance data is based upon the lower voltage of dual voltage rated units.
Performance stated is at the rated power supply; performance may vary as the power supply varies from the rated.
Operation below 4°C EWT is based upon a 15% methanol antifreeze solution.
Operation below 16°C EWT requires optional insulated water/refrigerant circuit.
See performance correction tables for operating conditions other than those listed above.
Gray shaded area refers to calculations required to determine if heating water flow is sufficient for non-antifreeze systems.

ClimateMaster works continually to improve its products. As a result, the design and specifications of each product at the time of order may be changed without notice and may not be as described herein. Please contact ClimateMaster's Customer Service Department at +1-405-745-6000 for specific information on the current design and specifications. Statements and other information contained herein are not express warranties and do not form the basis of any bargain between the parties, but are merely ClimateMaster's opinion or commendation of its products. The latest version of this document is available at **climatemaster.com.**

CLIMATEMASTER®
Water-Source Heat Pump Systems

Performance Data - TMW120 - Heating

Source			Load																			
EWT °C	Flow		EWT °C	Flow 0.95 l/s						Flow 1.42 l/s						Flow 1.89 l/s					
	l/s	WPD kPa		Output kW	Input kW	HE kW	LWT °C	COP W/W	WPD kPa	Output kW	Input kW	HE kW	LWT °C	COP W/W	WPD kPa	Output kW	Input kW	HE kW	LWT °C	COP W/W	WPD kPa
-5	1.89	54.5	15	24.87	4.48	20.39	19.44	5.55	10.3	24.87	4.45	20.42	19.25	5.59	25.5	24.87	4.43	20.44	19.06	5.62	45.5
			25	24.82	5.51	19.31	28.89	4.50	9.7	24.79	5.49	19.31	28.69	4.52	23.4	24.76	5.46	19.30	28.50	4.53	42.7
			30	24.61	6.17	18.44	33.83	3.99	9.7	24.61	6.14	18.47	33.64	4.01	22.8	24.61	6.12	18.49	33.44	4.02	42.1
			35	24.24	6.97	17.27	38.78	3.48	9.0	24.21	6.94	17.28	38.58	3.49	22.8	24.19	6.90	17.28	38.39	3.50	40.7
0	0.95	11.7	15	27.13	4.53	22.60	20.28	5.99	10.3	26.66	4.47	22.19	19.78	5.97	25.5	26.18	4.41	21.77	19.28	5.94	45.5
			25	27.18	5.56	21.62	29.72	4.89	9.7	26.74	5.49	21.24	29.22	4.87	23.4	26.29	5.43	20.86	28.72	4.84	42.7
			30	26.97	6.23	20.74	34.67	4.33	9.7	26.58	6.16	20.42	34.17	4.32	22.8	26.18	6.08	20.10	33.67	4.30	42.1
			35	26.66	7.04	19.62	39.61	3.79	9.0	26.29	6.95	19.34	39.14	3.79	22.8	25.92	6.86	19.07	38.67	3.78	40.7
			45	25.24	9.02	16.22	49.72	2.80	8.3	25.13	8.90	16.24	49.14	2.82	21.4	25.03	8.77	16.25	48.56	2.85	39.3
	1.42	30.3	15	29.39	4.56	24.83	21.11	6.45	10.3	29.39	4.49	24.90	20.42	6.54	25.5	29.39	4.43	24.96	19.72	6.64	45.5
			25	29.50	5.61	23.89	30.56	5.26	9.7	29.47	5.54	23.94	29.86	5.32	23.4	29.44	5.46	23.98	29.17	5.39	42.7
			30	29.34	6.28	23.06	35.50	4.67	9.7	29.31	6.20	23.11	34.81	4.73	22.8	29.29	6.12	23.17	34.11	4.79	42.1
			35	29.02	7.08	21.94	40.44	4.10	9.0	28.97	6.99	21.98	39.75	4.15	22.8	28.92	6.89	22.03	39.06	4.20	40.7
			45	27.92	9.05	18.87	50.22	3.08	8.3	27.81	8.93	18.88	49.56	3.11	21.4	27.71	8.81	18.90	48.89	3.15	39.3
	1.89	52.4	15	28.02	4.58	23.45	20.78	6.12	10.3	28.02	4.51	23.51	20.14	6.21	25.5	28.02	4.44	23.58	19.50	6.31	45.5
			25	28.02	5.66	22.37	30.22	4.95	9.7	28.00	5.58	22.42	29.58	5.02	23.4	27.97	5.49	22.48	28.94	5.09	42.7
			30	27.81	6.33	21.48	35.22	4.39	9.7	27.79	6.25	21.54	34.56	4.45	22.8	27.76	6.17	21.60	33.89	4.50	42.1
			35	27.45	7.13	20.31	40.17	3.85	9.0	27.39	7.04	20.36	39.50	3.89	22.8	27.34	6.94	20.40	38.83	3.94	40.7
			45	26.18	9.09	17.10	49.94	2.88	8.3	26.08	8.96	17.12	49.31	2.91	21.4	25.97	8.84	17.13	48.67	2.94	39.3
5	0.95	10.3	15	29.34	4.56	24.78	21.06	6.44	10.3	29.34	4.49	24.85	20.36	6.53	25.5	29.34	4.43	24.91	19.67	6.63	45.5
			25	29.50	5.61	23.89	30.56	5.26	9.7	29.47	5.54	23.94	29.86	5.32	23.4	29.44	5.46	23.98	29.17	5.39	42.7
			30	29.39	6.28	23.11	35.56	4.68	9.7	29.37	6.20	23.17	34.83	4.74	22.8	29.34	6.12	23.22	34.11	4.80	42.1
			35	29.18	7.08	22.10	40.50	4.12	9.0	29.13	6.99	22.14	39.78	4.17	22.8	29.08	6.89	22.19	39.06	4.22	40.7
			45	28.29	9.04	19.25	50.33	3.13	8.3	28.18	8.91	19.27	49.64	3.16	21.4	28.08	8.79	19.29	48.94	3.19	39.3
	1.42	27.6	15	33.91	4.58	29.34	21.94	7.41	10.3	33.91	4.51	29.40	21.14	7.52	25.5	33.91	4.44	29.47	20.33	7.63	45.5
			25	34.07	5.66	28.41	31.39	6.02	9.7	34.05	5.58	28.47	30.58	6.11	23.4	34.02	5.49	28.52	29.78	6.19	42.7
			30	33.86	6.33	27.53	36.33	5.35	9.7	33.83	6.24	27.59	35.56	5.42	22.8	33.81	6.15	27.66	34.78	5.50	42.1
			35	33.49	7.13	26.36	41.28	4.69	9.0	33.47	7.04	26.43	40.50	4.76	22.8	33.44	6.94	26.50	39.72	4.82	40.7
			45	32.18	9.09	23.09	51.06	3.54	8.3	32.10	8.95	23.15	50.28	3.58	21.4	32.02	8.82	23.20	49.50	3.63	39.3
	1.89	49.6	15	31.34	4.59	26.75	21.44	6.82	10.3	31.34	4.53	26.81	20.69	6.92	25.5	31.34	4.46	26.88	19.94	7.03	45.5
			25	31.34	5.69	25.65	30.89	5.51	9.7	31.31	5.62	25.69	30.14	5.57	23.4	31.28	5.54	25.74	29.39	5.64	42.7
			30	31.13	6.36	24.76	35.83	4.89	9.7	31.10	6.28	24.82	35.11	4.95	22.8	31.07	6.20	24.88	34.39	5.01	42.1
			35	30.71	7.17	23.54	40.78	4.28	9.0	30.65	7.07	23.59	40.06	4.34	22.8	30.60	6.97	23.63	39.33	4.39	40.7
			45	29.29	9.10	20.18	50.50	3.22	8.3	29.21	8.98	20.23	49.81	3.25	21.4	29.13	8.86	20.27	49.11	3.29	39.3
10	0.95	9.7	15	32.39	4.56	27.83	21.61	7.10	10.3	32.39	4.50	27.89	20.86	7.19	25.5	32.39	4.44	27.94	20.11	7.29	45.5
			25	32.65	5.63	27.03	31.11	5.80	9.7	32.63	5.55	27.07	30.36	5.88	23.4	32.60	5.48	27.12	29.61	5.95	42.7
			30	32.55	6.30	26.25	36.11	5.17	9.7	32.52	6.22	26.30	35.33	5.23	22.8	32.49	6.13	26.36	34.56	5.30	42.1
			35	32.28	7.10	25.18	41.06	4.55	9.0	32.23	7.00	25.23	40.31	4.60	22.8	32.18	6.90	25.27	39.56	4.66	40.7
			45	31.34	9.07	22.27	50.83	3.46	8.3	31.23	8.95	22.29	50.11	3.49	21.4	31.13	8.82	22.30	49.39	3.53	39.3
			50							30.76	10.15	20.61	55.78	3.03	20.7	30.55	9.87	20.68	54.33	3.09	38.6
	1.42	26.2	15	35.96	4.61	31.36	22.33	7.80	10.3	35.99	4.59	31.40	22.00	7.84	25.5	36.02	4.46	31.56	20.61	8.07	45.5
			25	35.96	5.72	30.24	31.78	6.28	9.7	35.99	5.67	30.32	31.44	6.34	23.4	36.02	5.56	30.46	30.06	6.48	42.7
			30	35.75	6.41	29.34	36.72	5.58	9.7	35.75	6.36	29.39	36.39	5.62	22.8	35.75	6.23	29.52	35.00	5.74	42.1
			35	35.33	7.22	28.12	41.61	4.90	9.0	35.31	7.17	28.14	41.33	4.93	22.8	35.28	7.02	28.26	39.94	5.03	40.7
			45	33.65	9.13	24.52	51.28	3.68	8.3	33.57	9.10	24.47	51.11	3.69	21.4	33.49	8.87	24.62	49.72	3.77	39.3
			50							32.60	10.15	22.45	55.94	3.21	20.7	32.44	9.87	22.57	54.56	3.29	38.6
	1.89	46.9	15	35.96	4.61	31.36	22.33	7.80	10.3	35.99	4.61	31.38	22.33	7.81	25.5	36.02	4.48	31.54	20.61	8.04	45.5
			25	36.02	5.72	30.29	31.78	6.29	9.7	36.02	5.72	30.29	31.78	6.29	23.4	36.02	5.56	30.46	30.06	6.48	42.7
			30	35.81	6.41	29.39	36.72	5.58	9.7	35.78	6.32	29.46	36.72	5.66	22.8	35.75	6.23	29.52	35.00	5.74	42.1
			35	35.33	7.22	28.12	41.61	4.90	9.0	35.31	7.22	28.09	41.61	4.89	22.8	35.28	7.02	28.26	40.00	5.03	40.7
			45	33.65	9.13	24.52	51.28	3.68	8.3	33.60	9.13	24.46	51.28	3.68	21.4	33.55	8.87	24.67	49.72	3.78	39.3
			50							32.60	10.17	22.43	56.11	3.21	20.7	32.44	9.87	22.57	54.56	3.29	38.6
15	0.95	9.0	15	33.86	4.61	29.25	21.89	7.35	10.3	33.86	4.55	29.31	21.11	7.44	25.5	33.86	4.49	29.37	20.33	7.54	45.5
			25	34.39	5.64	28.75	31.44	6.10	9.7	34.39	5.56	28.83	30.64	6.19	23.4	34.39	5.48	28.91	29.83	6.28	42.7
			30	34.44	6.30	28.14	36.44	5.47	9.7	34.41	6.21	28.21	35.64	5.54	22.8	34.39	6.12	28.27	34.83	5.62	42.1
			35	34.39	7.08	27.30	41.44	4.85	9.0	34.33	6.99	27.35	40.64	4.91	22.8	34.28	6.89	27.39	39.83	4.98	40.7
			45	34.02	9.05	24.97	51.39	3.76	8.3	33.97	8.93	25.04	50.58	3.80	21.4	33.91	8.81	25.11	49.78	3.85	39.3
			50							33.84	10.14	23.70	56.39	1.66	20.7	33.65	9.87	23.78	54.72	3.41	38.6
	1.42	24.1	15	37.80	4.66	33.15	22.67	8.12	10.3	37.83	4.59	33.24	21.78	8.24	25.5	37.86	4.53	33.33	20.89	8.36	45.5
			25	38.17	5.76	32.42	32.17	6.63	9.7	38.15	5.67	32.47	31.28	6.72	23.4	38.12	5.59	32.53	30.39	6.82	42.7
			30	38.12	6.45	31.67	37.17	5.91	9.7	38.09	6.36	31.74	36.28	5.99	22.8	38.07	6.26	31.80	35.39	6.08	42.1
			35	37.86	7.23	30.62	42.11	5.23	9.0	37.86	7.13	30.72	41.22	5.31	22.8	37.86	7.04	30.82	40.33	5.38	40.7
			45	36.81	9.15	27.65	51.89	4.02	8.3	36.75	9.03	27.72	51.03	4.07	21.4	36.70	8.91	27.80	50.17	4.12	39.3
			50							36.40	9.97	26.43	55.83	1.80	20.7	35.96	9.92	26.04	55.06	3.62	38.6
	1.89	44.1	15	37.86	4.66	33.20	22.67	8.13	10.3	37.88	4.59	33.29	21.78	8.25	25.5	37.91	4.53	33.38	20.89	8.38	45.5
			25	38.17	5.76	32.42	32.17	6.63	9.7	38.17	5.67	32.50	31.28	6.73	23.4	38.17	5.59	32.58	30.39	6.83	42.7
			30	38.12	6.45	31.67	37.17	5.91	9.7	38.12	6.36	31.76	36.28	6.00	22.8	38.12	6.26	31.86	35.39	6.08	42.1
			35	37.91	7.23	30.68	42.11	5.24	9.0	37.88	7.13	30.75	41.22	5.31	22.8	37.86	7.04	30.82	40.33	5.38	40.7
			45	36.86	9.15	27.71	51.94	4.03	8.3	36.78	9.03	27.75	51.06	4.07	21.4	36.70	8.91	27.80	50.17	4.12	39.3
			50													36.02	9.92	26.09	55.06	3.63	38.6

Interpolation is permissible; extrapolation is not.
All entering air conditions are 27°C DB and 19°C WB in cooling and 20°C DB in heating.
AHRI/ISO certified conditions are 27°C DB and 19°C WB in cooling and 20°C DB in heating.
Table does not reflect fan or pump power corrections for AHRI/ISO conditions.
All performance data is based upon the lower voltage of dual voltage rated units.
Performance stated is at the rated power supply; performance may vary as the power supply varies from the rated.
Operation below 4°C EWT is based upon a 15% methanol antifreeze solution.
Operation below 16°C EWT requires optional insulated water/refrigerant circuit.
See performance correction tables for operating conditions other than those listed above.
Gray shaded area refers to calculations required to determine if heating water flow is sufficient for non-antifreeze systems.

Table Continued on Next Page

ClimateMaster works continually to improve its products. As a result, the design and specifications of each product at the time of order may be changed without notice and may not be as described herein. Please contact ClimateMaster's Customer Service Department at +1-405-745-6000 for specific information on the current design and specifications. Statements and other information contained herein are not express warranties and do not form the basis of any bargain between the parties, but are merely ClimateMaster's opinion or commendation of its products. The latest version of this document is available at **climatemaster.com.**

CLIMATEMASTER®
Water-Source Heat Pump Systems

Performance Data - TMW120 - Heating

Table Continued from Previous Page

Source			Load																			
EWT °C	Flow		EWT °C	Flow 0.95 l/s						Flow 1.42 l/s						Flow 1.89 l/s					
	l/s	WPD kPa		Output kW	Input kW	HE kW	LWT °C	COP W/W	WPD kPa	Output kW	Input kW	HE kW	LWT °C	COP W/W	WPD kPa	Output kW	Input kW	HE kW	LWT °C	COP W/W	WPD kPa
20	0.95	8.3	15	35.33	4.64	30.69	22.22	7.61	10.3	35.36	4.58	30.78	21.39	7.71	25.5	35.39	4.53	30.86	20.56	7.82	45.5
			25	36.07	5.64	30.43	31.78	6.39	9.7	36.07	5.57	30.50	30.94	6.48	23.4	36.07	5.49	30.58	30.11	6.57	42.7
			30	36.33	6.28	30.05	36.83	5.78	9.7	36.31	6.20	30.11	35.97	5.86	22.8	36.28	6.12	30.16	35.11	5.93	42.1
			35	36.49	7.07	29.42	41.83	5.16	9.0	36.46	6.97	29.49	40.97	5.23	22.8	36.44	6.87	29.57	40.11	5.30	40.7
			45	36.75	9.04	27.72	51.89	4.07	8.3	36.70	8.91	27.79	51.03	4.12	21.4	36.65	8.79	27.86	50.17	4.17	39.3
			50													36.75	9.86	26.90	55.17	3.73	38.6
	1.42	22.8	15	37.54	4.66	32.88	22.61	8.06	10.3	37.57	4.60	32.97	21.72	8.17	25.5	37.59	4.54	33.05	20.83	8.28	45.5
			25	38.17	5.71	32.47	32.17	6.69	9.7	38.20	5.63	32.57	31.28	6.78	23.4	38.23	5.56	32.67	30.39	6.88	42.7
			30	38.38	6.38	32.00	37.22	6.02	9.7	38.38	6.29	32.09	36.31	6.10	22.8	38.38	6.20	32.18	35.39	6.19	42.1
			35	38.49	7.17	31.32	42.22	5.37	9.0	38.46	7.07	31.39	41.33	5.44	22.8	38.44	6.97	31.47	40.44	5.51	40.7
			45	38.38	9.12	29.26	52.22	4.21	8.3	38.33	9.00	29.33	51.31	4.26	21.4	38.28	8.87	29.41	50.39	4.31	39.3
			50													38.17	9.91	28.27	55.39	3.85	38.6
	1.89	42.1	15	39.75	4.69	35.06	23.06	8.47	10.3	39.78	4.62	35.15	22.11	8.60	25.5	39.80	4.56	35.24	21.17	8.73	45.5
			25	40.33	5.77	34.56	32.56	6.99	9.7	40.33	5.69	34.64	31.64	7.09	23.4	40.33	5.61	34.72	30.72	7.19	42.7
			30	40.43	6.46	33.97	37.61	6.26	9.7	40.43	6.37	34.06	36.67	6.35	22.8	40.43	6.28	34.15	35.72	6.44	42.1
			35	40.49	7.27	33.22	42.61	5.57	9.0	40.46	7.17	33.29	41.67	5.65	22.8	40.43	7.07	33.37	40.72	5.72	40.7
			45	40.07	9.18	30.88	52.50	4.36	8.3	40.01	9.06	30.95	51.56	4.42	21.4	39.96	8.94	31.02	50.61	4.47	39.3
			50													39.59	9.95	29.64	55.61	3.98	38.6
25	0.95	7.6	15	36.81	4.69	32.12	22.44	7.85	10.3	36.83	4.62	32.21	21.61	7.96	25.5	36.86	4.56	32.30	20.78	8.08	45.5
			25	37.80	5.64	32.16	32.11	6.70	9.7	37.80	5.57	32.24	31.22	6.79	23.4	37.80	5.49	32.31	30.33	6.88	42.7
			30	38.23	6.28	31.94	37.17	6.09	9.7	38.23	6.20	32.03	36.28	6.17	22.8	38.23	6.12	32.11	35.39	6.25	42.1
			35	38.59	7.05	31.54	42.28	5.47	9.0	38.57	6.95	31.61	41.36	5.55	22.8	38.54	6.86	31.69	40.44	5.62	40.7
			45	39.49	9.02	30.47	52.44	4.38	8.3	39.41	8.90	30.51	51.50	4.43	21.4	39.33	8.77	30.56	50.56	4.48	39.3
			50													39.86	9.84	30.02	55.61	4.05	38.6
	1.42	21.4	15	39.22	4.71	34.52	22.94	8.33	10.3	39.25	4.64	34.61	22.00	8.46	25.5	39.28	4.58	34.70	21.06	8.58	45.5
			25	40.12	5.72	34.39	32.50	7.01	9.7	40.14	5.64	34.50	31.58	7.12	23.4	40.17	5.56	34.61	30.67	7.23	42.7
			30	40.54	6.38	34.16	37.61	6.35	9.7	40.51	6.29	34.22	36.67	6.44	22.8	40.49	6.20	34.29	35.72	6.53	42.1
			35	40.75	7.17	33.58	42.72	5.69	9.0	40.78	7.07	33.71	41.75	5.77	22.8	40.80	6.97	33.83	40.78	5.85	40.7
			45	41.38	9.12	32.26	52.78	4.54	8.3	41.33	9.00	32.33	51.81	4.59	21.4	41.27	8.87	32.40	50.83	4.65	39.3
			50													43.17	9.92	33.25	55.83	4.35	38.6
	1.89	40.7	15	41.64	4.72	36.92	23.39	8.82	10.3	41.67	4.66	37.01	22.39	8.95	25.5	41.70	4.59	37.10	21.39	9.08	45.5
			25	42.43	5.81	36.63	32.94	7.31	9.7	42.46	5.72	36.73	31.97	7.42	23.4	42.48	5.64	36.84	31.00	7.53	42.7
			30	42.80	6.48	36.32	38.06	6.61	9.7	42.77	6.39	36.39	37.06	6.70	22.8	42.75	6.30	36.45	36.06	6.79	42.1
			35	43.01	7.28	35.73	43.11	5.91	9.0	43.01	7.18	35.83	42.08	5.99	22.8	43.01	7.08	35.92	41.06	6.07	40.7
			45	43.27	9.22	34.06	53.11	4.69	8.3	43.22	9.09	34.13	52.08	4.75	21.4	43.17	8.97	34.20	51.06	4.81	39.3
			50													43.17	10.00	33.16	56.06	4.32	38.6

Interpolation is permissible; extrapolation is not.
All entering air conditions are 27°C DB and 19°C WB in cooling and 20°C DB in heating.
AHRI/ISO certified conditions are 27°C DB and 19°C WB in cooling and 20°C DB in heating.
Table does not reflect fan or pump power corrections for AHRI/ISO conditions.
All performance data is based upon the lower voltage of dual voltage rated units.
Performance stated is at the rated power supply; performance may vary as the power supply varies from the rated.
Operation below 4°C EWT is based upon a 15% methanol antifreeze solution.
Operation below 16°C EWT requires optional insulated water/refrigerant circuit.
See performance correction tables for operating conditions other than those listed above.
Gray shaded area refers to calculations required to determine if heating water flow is sufficient for non-antifreeze systems.

ClimateMaster works continually to improve its products. As a result, the design and specifications of each product at the time of order may be changed without notice and may not be as described herein. Please contact ClimateMaster's Customer Service Department at +1-405-745-6000 for specific information on the current design and specifications. Statements and other information contained herein are not express warranties and do not form the basis of any bargain between the parties, but are merely ClimateMaster's opinion or commendation of its products. The latest version of this document is available at **climatemaster.com.**

CLIMATEMASTER®
Water-Source Heat Pump Systems

Performance Data - TMW170 - Cooling

Source			Load																			
				1.14 l/s						1.70 l/s						2.21 l/s					
EWT °C	Flow Rate l/s	WPD kPa	EWT °C	Output kW	Input kW	HR kW	LWT °C	EER W/W	WPD kPa	Output kW	Input kW	HR kW	LWT °C	EER W/W	WPD kPa	Output kW	Input kW	HR kW	LWT °C	EER W/W	WPD kPa
10	1.14	2.96	10							36.3	5.70	42.0	4.8	6.4	11.64	37.1	5.74	42.8	6.0	6.5	22.64
			15	37.7	5.68	43.4	6.8	6.6	2.17	39.4	5.73	45.1	9.4	6.9	11.01	40.1	5.75	45.9	10.7	7.0	21.68
			20	39.8	5.74	45.6	11.4	6.9	1.38	41.4	5.78	47.1	14.1	7.2	10.38	42.1	5.80	47.9	15.4	7.3	20.72
			25	42.3	5.81	48.1	15.8	7.3	1.06	43.6	5.84	49.5	18.8	7.5	9.91	44.3	5.86	50.1	20.2	7.6	19.98
			30	43.9	5.85	49.7	20.5	7.5	0.88	45.0	5.88	50.9	23.6	7.7	9.47	45.5	5.90	51.4	25.1	7.7	19.30
	1.70	11.65	10							36.8	5.25	42.1	4.7	7.0	11.64	37.6	5.27	42.9	5.9	7.1	22.64
			15	38.2	5.28	43.5	6.7	7.2	2.17	39.8	5.31	45.1	9.3	7.5	11.01	25.6	5.32	30.9	10.6	4.8	21.68
			20	40.2	5.31	45.5	11.3	7.6	1.38	41.7	5.34	47.1	14.0	7.8	10.38	42.4	5.35	47.8	15.4	7.9	20.72
			25	42.6	5.35	48.0	15.8	8.0	1.06	44.0	5.38	49.3	18.7	8.2	9.91	44.6	5.39	49.9	20.2	8.3	19.98
			30	44.2	5.38	49.5	20.4	8.2	0.88	45.3	5.40	50.7	23.5	8.4	9.47	45.8	5.41	51.2	25.0	8.5	19.30
	2.21	22.61	10							37.0	5.06	42.0	4.7	7.3	11.64	37.8	5.07	42.9	5.9	7.5	22.64
			15	38.4	5.08	43.5	6.7	7.6	2.17	40.0	5.11	45.1	9.3	7.8	11.01	40.8	5.11	45.9	10.6	8.0	21.68
			20	40.4	5.10	45.5	11.3	7.9	1.38	41.9	5.13	47.0	14.0	8.2	10.38	42.6	5.14	47.7	15.4	8.3	20.72
			25	42.8	5.14	47.9	15.7	8.3	1.06	44.1	5.16	49.3	18.7	8.5	9.91	44.7	5.17	49.9	20.2	8.7	19.98
			30	44.3	5.16	49.4	20.4	8.6	0.88	45.4	5.17	50.6	23.5	8.8	9.47	45.9	5.18	51.1	25.0	8.9	19.30
20	1.14	1.38	10							34.0	6.70	40.7	5.1	5.1	11.64	34.9	6.73	41.6	6.2	5.2	22.64
			15	35.8	6.74	42.5	7.3	5.3	2.17	37.6	6.79	44.4	9.6	5.5	11.01	38.5	6.82	45.3	10.8	5.6	21.68
			20	38.3	6.81	45.2	11.7	5.6	1.38	40.1	6.86	46.9	14.3	5.8	10.38	40.9	6.88	47.7	15.6	5.9	20.72
			25	41.2	6.89	48.1	16.1	6.0	1.06	42.7	6.93	49.7	18.9	6.2	9.91	43.4	6.95	50.3	20.3	6.2	19.98
			30	43.1	6.94	50.0	20.7	6.2	0.88	44.4	6.97	51.3	23.7	6.4	9.47	44.9	6.99	51.9	25.1	6.4	19.30
	1.70	10.38	10							34.9	6.33	41.2	5.0	5.5	11.64	35.8	6.35	42.1	6.1	5.6	22.64
			15	36.6	6.36	42.9	7.1	5.7	2.17	38.3	6.39	44.7	9.5	6.0	11.01	39.2	6.41	45.6	10.8	6.1	21.68
			20	39.0	6.39	45.4	11.6	6.1	1.38	40.6	6.42	47.1	14.2	6.3	10.38	41.4	6.44	47.8	15.5	6.4	20.72
			25	41.7	6.45	48.2	16.0	6.5	1.06	43.1	6.47	49.6	18.8	6.7	9.91	43.8	6.48	50.3	20.3	6.8	19.98
			30	43.4	6.47	49.9	20.6	6.7	0.88	44.6	6.50	51.1	23.6	6.9	9.47	45.1	6.50	51.6	25.1	6.9	19.30
	2.21	20.72	10							35.2	6.16	41.4	5.0	5.7	11.64	36.1	6.17	42.3	6.1	5.9	22.64
			15	36.9	6.18	43.1	7.0	6.0	2.17	38.6	6.20	44.8	9.5	6.2	11.01	39.5	6.21	45.7	10.7	6.4	21.68
			20	39.2	6.20	45.4	11.5	6.3	1.38	40.9	6.22	47.1	14.2	6.6	10.38	41.6	6.23	47.9	15.5	6.7	20.72
			25	41.9	6.23	48.1	15.9	6.7	1.06	43.3	6.25	49.6	18.8	6.9	9.91	43.9	6.26	50.2	20.2	7.0	19.98
			30	43.6	6.25	49.8	20.6	7.0	0.88	44.8	6.27	51.0	23.6	7.1	9.47	45.3	6.27	51.5	25.1	7.2	19.30
30	1.14	0.88	10							31.1	7.77	38.9	5.6	4.0	11.64	32.0	7.80	39.8	6.5	4.1	22.64
			15	33.2	7.83	41.0	7.8	4.2	2.17	35.1	7.89	42.9	10.0	4.4	11.01	36.0	7.92	43.9	11.1	4.5	21.68
			20	36.1	7.92	44.1	12.2	4.6	1.38	38.0	7.97	46.0	14.6	4.8	10.38	38.9	8.00	46.9	15.8	4.9	20.72
			25	39.4	8.01	47.4	16.5	4.9	1.06	41.2	8.07	49.2	19.1	5.1	9.91	42.0	8.10	50.1	20.5	5.2	19.98
			30	41.8	8.08	49.9	20.9	5.2	0.88	43.5	8.14	51.6	23.8	5.3	9.47	44.3	8.16	52.4	25.2	5.4	19.30
	1.70	9.47	10							32.1	7.41	39.5	5.4	4.3	11.64	33.0	7.42	40.5	6.4	4.5	22.64
			15	34.2	7.45	41.6	7.6	4.6	2.17	36.1	7.48	43.5	9.8	4.8	11.01	37.0	7.50	44.5	11.0	4.9	21.68
			20	37.1	7.49	44.5	12.0	4.9	1.38	38.9	7.52	46.4	14.4	5.2	10.38	39.8	7.54	47.3	15.7	5.3	20.72
			25	40.2	7.55	47.8	16.3	5.3	1.06	41.9	7.58	49.5	19.0	5.5	9.91	42.7	7.60	50.3	20.4	5.6	19.98
			30	42.4	7.59	50.0	20.8	5.6	0.88	44.0	7.62	51.6	23.7	5.8	9.47	44.7	7.63	52.3	25.2	5.9	19.30
	2.21	19.30	10							32.6	7.23	39.8	5.3	4.5	11.64	33.5	7.25	40.8	6.4	4.6	22.64
			15	34.6	7.26	41.9	7.5	4.8	2.17	36.5	7.29	43.8	9.8	5.0	11.01	37.4	7.30	44.7	11.0	5.1	21.68
			20	37.5	7.29	44.7	11.9	5.1	1.38	39.3	7.32	46.6	14.4	5.4	10.38	40.2	7.32	47.5	15.7	5.5	20.72
			25	40.6	7.33	47.9	16.2	5.5	1.06	42.2	7.36	49.6	19.0	5.7	9.91	43.0	7.37	50.3	20.4	5.8	19.98
			30	42.7	7.35	50.0	20.8	5.8	0.88	44.1	7.38	51.5	23.7	6.0	9.47	44.8	7.39	52.2	25.2	6.1	19.30
40	1.14	0.58	10							26.8	9.11	35.9	6.2	2.9	11.64	27.7	9.15	36.9	7.0	3.0	22.64
			15	29.6	9.21	38.8	8.6	3.2	2.17	31.6	9.28	40.8	10.5	3.4	11.01	32.6	9.31	41.9	11.5	3.5	21.68
			20	33.2	9.33	42.6	12.8	3.6	1.38	35.2	9.40	44.6	15.0	3.7	10.38	36.1	9.43	45.5	16.1	3.8	20.72
			25	36.8	9.45	46.2	17.0	3.9	1.06	37.8	9.45	47.2	19.6	4.0	9.91	38.6	9.48	48.1	20.8	4.1	19.98
			30																		
	1.70	8.67	10							28.2	8.73	36.9	6.0	3.2	11.64	29.1	8.75	37.8	6.9	3.3	22.64
			15	30.7	8.79	39.5	8.4	3.5	2.17	32.6	8.83	41.5	10.3	3.7	11.01	33.6	8.85	42.5	11.4	3.8	21.68
			20	34.1	8.84	42.9	12.6	3.9	1.38	36.1	8.89	45.0	14.8	4.1	10.38	37.0	8.91	45.9	16.0	4.2	20.72
			25	37.7	8.92	46.6	16.8	4.2	1.06	39.5	8.96	48.4	19.4	4.4	9.91	40.3	8.98	49.3	20.6	4.5	19.98
			30	40.2	8.97	49.2	21.3	4.5	0.88	38.5	8.92	47.4	24.5	4.3	9.47	39.4	8.94	48.4	25.7	4.4	19.30
	2.21	18.04	10																		
			15	31.2	8.59	39.8	8.2	3.6	2.17	33.2	8.62	41.8	10.3	3.8	11.01	34.1	8.63	42.8	11.3	4.0	21.68
			20	34.6	8.63	43.2	12.5	4.0	1.38	36.5	8.66	45.2	14.8	4.2	10.38	37.5	8.67	46.2	15.9	4.3	20.72
			25	38.2	8.69	46.8	16.7	4.4	1.06	40.0	8.71	48.7	19.3	4.6	9.91	40.9	8.73	49.6	20.6	4.7	19.98
			30	40.8	8.71	49.5	21.2	4.7	0.88	42.4	8.74	51.2	23.9	4.9	9.47	43.2	8.76	51.9	25.3	4.9	19.30

Interpolation is permissible; extrapolation is not.
All entering air conditions are 27°C DB and 19°C WB in cooling and 20°C DB in heating.
AHRI/ISO certified conditions are 27°C DB and 19°C WB in cooling and 20°C DB in heating.
Table does not reflect fan or pump power corrections for AHRI/ISO conditions.
All performance data is based upon the lower voltage of dual voltage rated units.
Performance stated is at the rated power supply; performance may vary as the power supply varies from the rated.
Operation below 4°C EWT is based upon a 15% methanol antifreeze solution.
Operation below 16°C EWT requires optional insulated water/refrigerant circuit.
See performance correction tables for operating conditions other than those listed above.
Gray shaded area refers to calculations required to determine if heating water flow is sufficient for non-antifreeze systems.

ClimateMaster works continually to improve its products. As a result, the design and specifications of each product at the time of order may be changed without notice and may not be as described herein. Please contact ClimateMaster's Customer Service Department at +1-405-745-6000 for specific information on the current design and specifications. Statements and other information contained herein are not express warranties and do not form the basis of any bargain between the parties, but are merely ClimateMaster's opinion or commendation of its products. The latest version of this document is available at **climatemaster.com.**

CLIMATEMASTER
Water-Source Heat Pump Systems

Performance Data - TMW170 - Heating

Source			Load																			
				1.14 l/s						1.70 l/s						2.21 l/s						
EWT °C	Flow Rate l/s	WPD kPa	EWT °C	Output kW	Input kW	HR kW	LWT °C	COP W/W	WPD kPa	Output kW	Input kW	HR kW	LWT °C	COP W/W	WPD kPa	Output kW	Input kW	HR kW	LWT °C	COP W/W	WPD kPa
-5	2.21	35.50	15	29.1	5.45	23.6	21.3	5.33	2.17	30.5	5.90	24.6	19.4	5.17	11.01	31.1	5.45	25.7	18.4	5.71	21.68
			20	27.8	6.11	21.7	26.0	4.55	1.38	29.2	6.60	22.6	24.2	4.42	10.38	29.6	6.04	23.5	23.2	4.90	20.72
			25	27.6	6.61	21.0	31.0	4.18	1.06	28.5	6.61	21.9	29.1	4.31	9.91	29.4	6.62	22.8	28.2	4.45	19.98
0	1.14	5.55	15	31.6	5.50	26.1	21.8	5.76	2.17	32.7	5.50	27.2	19.6	5.95	11.01	34.2	5.89	28.3	18.7	5.80	21.68
			20	30.1	6.15	24.0	26.6	4.90	1.38	31.1	6.15	24.9	24.5	5.05	10.38	32.4	6.52	25.9	23.5	4.97	20.72
			25	29.7	6.66	23.0	31.4	4.46	1.06	30.6	6.65	23.9	29.4	4.60	9.91	31.5	6.66	24.9	28.4	4.74	19.98
			30	28.6	7.07	21.6	36.2	4.05	0.88	29.5	7.06	22.4	34.2	4.17	9.47	30.3	7.06	23.3	33.3	4.30	19.30
			35	27.3	7.56	19.7	41.0	3.61	0.71	28.0	7.55	20.5	39.1	3.71	9.09	28.8	7.55	21.3	38.2	3.82	18.62
	1.70	18.35	15	32.9	5.52	27.4	22.1	5.96	2.17	34.5	5.91	28.6	19.9	5.83	11.01	35.6	5.89	29.8	18.8	6.06	21.68
			20	31.3	6.18	25.1	26.8	5.07	1.38	32.8	6.62	26.2	24.7	4.96	10.38	33.8	6.53	27.3	23.7	5.18	20.72
			25	30.9	6.69	24.2	31.7	4.62	1.06	31.9	6.68	25.2	29.6	4.77	9.91	32.9	6.69	26.2	28.6	4.93	19.98
			30	29.7	7.09	22.6	36.5	4.19	0.88	30.7	7.09	23.6	34.4	4.32	9.47	31.6	7.09	24.6	33.4	4.47	19.30
			35	28.3	7.58	20.7	41.2	3.73	0.71	29.1	7.58	21.6	39.2	3.84	9.09	30.1	7.58	22.5	38.3	3.96	18.62
	2.21	32.78	15	33.6	5.54	28.0	22.2	6.06	2.17	35.1	5.91	29.2	20.0	5.95	11.01	36.4	5.89	30.5	18.9	6.18	21.68
			20	31.9	6.20	25.7	26.9	5.15	1.38	33.4	6.62	26.8	24.8	5.05	10.38	34.5	6.53	28.0	23.7	5.29	20.72
			25	31.5	6.70	24.8	31.8	4.70	1.06	32.5	6.70	25.8	29.6	4.85	9.91	33.6	6.71	26.9	28.6	5.02	19.98
			30	30.3	7.11	23.2	36.6	4.26	0.88	31.3	7.11	24.2	34.5	4.40	9.47	32.3	7.11	25.2	33.5	4.55	19.30
			35	29.6	7.60	22.0	41.5	3.90	0.71	29.7	7.60	22.1	39.3	3.91	9.09	30.7	7.60	23.1	38.3	4.04	18.62
5	1.14	4.64	15	34.5	5.55	28.9	22.4	6.21	2.17	35.6	5.55	30.1	20.1	6.43	11.01	37.2	5.89	31.3	19.0	6.32	21.68
			20	32.8	6.22	26.5	27.1	5.27	1.38	33.8	6.21	27.6	24.9	5.44	10.38	35.2	6.53	28.7	23.8	5.40	20.72
			25	32.7	6.73	26.0	32.1	4.87	1.06	33.8	6.73	27.0	29.8	5.02	9.91	34.8	6.73	28.1	28.8	5.18	19.98
			30	31.5	7.14	24.3	36.8	4.41	0.88	32.4	7.14	25.3	34.7	4.55	9.47	33.4	7.13	26.3	33.6	4.69	19.30
			35	30.4	7.64	22.8	41.6	3.98	0.71	31.3	7.64	23.7	39.5	4.10	9.09	32.3	7.63	24.7	38.5	4.23	18.62
	1.70	16.60	15	35.8	5.58	30.2	22.7	6.42	2.17	37.4	5.92	31.5	20.3	6.32	11.01	38.7	5.89	32.8	19.2	6.57	21.68
			20	34.0	6.25	27.7	27.4	5.44	1.38	35.5	6.63	28.9	25.1	5.36	10.38	36.6	6.54	30.1	24.0	5.61	20.72
			25	34.0	6.76	27.2	32.3	5.03	1.06	35.1	6.76	28.3	30.0	5.20	9.91	36.3	6.77	29.6	28.9	5.37	19.98
			30	32.6	7.18	25.5	37.1	4.55	0.88	33.7	7.17	26.5	34.8	4.70	9.47	34.8	7.17	27.7	33.8	4.86	19.30
			35	31.6	7.68	23.9	41.9	4.12	0.71	32.6	7.67	24.9	39.7	4.25	9.09	33.6	7.67	26.0	38.7	4.39	18.62
	2.21	30.06	15	36.4	5.60	30.9	22.8	6.51	2.17	38.1	5.92	32.2	20.4	6.44	11.01	39.5	5.89	33.6	19.2	6.70	21.68
			20	34.6	6.27	28.3	27.5	5.52	1.38	36.1	6.63	29.5	25.2	5.45	10.38	37.3	6.54	30.8	24.1	5.71	20.72
			25	34.6	6.78	27.8	32.5	5.10	1.06	35.8	6.78	29.0	30.1	5.28	9.91	37.1	6.78	30.3	29.0	5.46	19.98
			30	33.2	7.19	26.0	37.2	4.62	0.88	34.3	7.19	27.2	34.9	4.78	9.47	35.5	7.19	28.3	33.9	4.94	19.30
			35	33.1	7.69	25.4	42.2	4.30	0.71	33.2	7.69	25.5	39.8	4.32	9.09	34.3	7.69	26.6	38.7	4.46	18.62
10	1.14	2.96	15	37.1	5.62	31.5	23.0	6.61	2.17	38.4	5.61	32.8	20.4	6.85	11.01	40.0	5.90	34.1	19.3	6.79	21.68
			20	35.2	6.29	28.9	27.7	5.60	1.38	36.4	6.28	30.1	25.2	5.79	10.38	37.8	6.54	31.3	24.1	5.79	20.72
			25	35.6	6.80	28.8	32.7	5.23	1.06	36.7	6.80	29.9	30.2	5.41	9.91	38.0	6.81	31.2	29.1	5.58	19.98
			30	34.2	7.22	26.9	37.4	4.73	0.88	35.2	7.22	28.0	35.1	4.88	9.47	36.4	7.21	29.2	33.9	5.04	19.30
			35	33.5	7.73	25.8	42.3	4.33	0.71	34.5	7.72	26.8	39.9	4.47	9.09	35.6	7.72	27.9	38.9	4.61	18.62
			40	32.2	8.48	23.7	47.0	3.80	0.58	33.2	8.47	24.7	44.8	3.92	8.67	34.2	8.47	25.7	43.7	4.03	18.04
			45	31.7	9.22	22.5	52.0	3.44	0.54	32.6	9.22	23.4	49.7	3.54	8.40	33.6	9.22	24.3	48.7	3.64	17.59
			50	31.2	9.97	21.3	56.9	3.13	0.47	32.1	9.97	22.1	54.7	3.22	8.06	33.0	9.97	23.0	53.6	3.31	17.04
	1.70	11.64	15	38.5	5.65	32.8	23.2	6.81	2.17	40.1	5.92	34.2	20.7	6.78	11.01	41.6	5.90	35.7	19.5	7.04	21.68
			20	36.4	6.33	30.1	27.9	5.76	1.38	38.0	6.63	31.4	25.5	5.73	10.38	39.2	6.54	32.7	24.3	6.00	20.72
			25	36.9	6.84	30.0	32.9	5.39	1.06	38.1	6.84	31.3	30.4	5.58	9.91	39.5	6.85	32.6	29.2	5.77	19.98
			30	35.4	7.26	28.1	37.7	4.88	0.88	36.5	7.26	29.3	35.2	5.04	9.47	37.8	7.25	30.5	34.1	5.21	19.30
			35	34.7	7.77	27.0	42.5	4.47	0.71	35.8	7.76	28.1	40.1	4.62	9.09	37.0	7.76	29.3	39.0	4.78	18.62
			40	33.4	8.52	24.9	47.3	3.92	0.58	34.4	8.52	25.9	45.0	4.04	8.67	35.5	8.51	27.0	43.9	4.17	18.04
			45	32.8	9.25	23.5	52.2	3.55	0.54	33.8	9.24	24.5	49.9	3.65	8.40	34.8	9.24	25.6	48.8	3.77	17.59
			50	32.2	10.00	22.2	57.1	3.22	0.47	33.2	10.00	23.2	54.8	3.32	8.06	34.1	9.99	24.2	53.8	3.42	17.04
	2.21	22.64	15	39.1	5.66	33.4	23.4	6.91	2.17	40.8	5.92	34.9	20.8	6.89	11.01	42.3	5.90	36.4	19.5	7.17	21.68
			20	37.0	6.34	30.7	28.1	5.84	1.38	38.6	6.63	32.0	25.5	5.82	10.38	39.9	6.54	33.4	24.3	6.11	20.72
			25	37.5	6.86	30.7	33.1	5.47	1.06	38.8	6.86	32.0	30.5	5.66	9.91	40.2	6.86	33.4	29.3	5.86	19.98
			30	36.0	7.28	28.7	37.8	4.94	0.88	37.2	7.28	29.9	35.3	5.11	9.47	38.5	7.28	31.2	34.2	5.29	19.30
			35	36.4	7.79	28.6	42.9	4.67	0.71	36.5	7.78	28.7	40.2	4.69	9.09	37.8	7.78	30.0	39.1	4.86	18.62
			40	34.9	8.54	26.4	47.6	4.09	0.58	35.0	8.54	26.5	45.0	4.10	8.67	36.2	8.54	27.6	43.9	4.24	18.04
			45	33.3	9.26	24.0	52.3	3.60	0.54	34.3	9.26	25.1	50.0	3.71	8.40	35.4	9.26	26.2	48.9	3.83	17.59
			50	32.7	10.01	22.7	57.2	3.27	0.47	33.7	10.01	23.7	54.9	3.37	8.06	34.7	10.01	24.7	53.8	3.47	17.04

Interpolation is permissible; extrapolation is not.
All entering air conditions are 27°C DB and 19°C WB in cooling and 20°C DB in heating.
AHRI/ISO certified conditions are 27°C DB and 19°C WB in cooling and 20°C DB in heating.
Table does not reflect fan or pump power corrections for AHRI/ISO conditions.
All performance data is based upon the lower voltage of dual voltage rated units.
Performance stated is at the rated power supply; performance may vary as the power supply varies from the rated.
Operation below 4°C EWT is based upon a 15% methanol antifreeze solution.
Operation below 16°C EWT requires optional insulated water/refrigerant circuit.
See performance correction tables for operating conditions other than those listed above.
Gray shaded area refers to calculations required to determine if heating water flow is sufficient for non-antifreeze systems.

Table Continued on Next Page

ClimateMaster works continually to improve its products. As a result, the design and specifications of each product at the time of order may be changed without notice and may not be as described herein. Please contact ClimateMaster's Customer Service Department at +1-405-745-6000 for specific information on the current design and specifications. Statements and other information contained herein are not express warranties and do not form the basis of any bargain between the parties, but are merely ClimateMaster's opinion or commendation of its products. The latest version of this document is available at **climatemaster.com.**

CLIMATEMASTER
Water-Source Heat Pump Systems

Performance Data - TMW170 - Heating

Table Continued from Previous Page

Source			Load																			
				1.14 l/s						1.70 l/s						2.21 l/s					
EWT °C	Flow Rate l/s	WPD kPa	EWT °C	Output kW	Input kW	HR kW	LWT °C	COP W/W	WPD kPa	Output kW	Input kW	HR kW	LWT °C	COP W/W	WPD kPa	Output kW	Input kW	HR kW	LWT °C	COP W/W	WPD kPa
15	1.14	2.17	15	39.9	5.69	34.2	23.5	7.02	2.17	41.3	5.68	35.6	20.8	7.27	11.01	43.0	5.90	37.1	19.6	7.29	21.68
			20	37.7	6.37	31.4	28.2	5.93	1.38	39.0	6.36	32.6	25.6	6.13	10.38	40.6	6.54	34.0	24.4	6.20	20.72
			25	38.6	6.90	31.7	33.3	5.60	1.06	39.9	6.89	33.0	30.7	5.79	9.91	41.3	6.90	34.4	29.4	5.98	19.98
			30	37.0	7.32	29.7	38.0	5.06	0.88	38.2	7.32	30.9	35.5	5.22	9.47	39.5	7.31	32.2	34.3	5.40	19.30
			35	36.8	7.83	29.0	42.0	4.70	0.71	38.0	7.83	30.2	40.4	4.85	9.09	39.2	7.82	31.4	39.2	5.01	18.62
			40	35.3	8.59	26.7	47.7	4.11	0.58	36.4	8.59	27.8	45.2	4.24	8.67	37.5	8.58	28.9	44.1	4.37	18.04
			45	35.0	9.31	25.7	52.6	3.76	0.54	36.0	9.30	26.7	50.2	3.87	8.40	37.1	9.29	27.8	49.0	3.99	17.59
			50	34.3	10.06	24.3	57.5	3.41	0.47	35.3	10.06	25.2	55.1	3.51	8.06	36.3	10.05	26.3	54.0	3.61	17.04
	1.70	11.01	15	41.2	5.73	35.4	23.8	7.19	2.17	42.9	5.93	37.0	21.1	7.23	11.01	44.5	5.91	38.6	19.8	7.53	21.68
			20	38.9	6.41	32.5	28.5	6.07	1.38	40.5	6.65	33.9	25.8	6.10	10.38	41.9	6.55	35.4	24.6	6.40	20.72
			25	39.9	6.94	33.0	33.6	5.75	1.06	41.3	6.94	34.4	30.8	5.96	9.91	42.8	6.94	35.9	29.6	6.17	19.98
			30	38.2	7.36	30.9	38.3	5.19	0.88	39.5	7.36	32.2	35.7	5.37	9.47	40.9	7.36	33.6	34.4	5.56	19.30
			35	38.1	7.88	30.3	43.2	4.84	0.71	39.4	7.87	31.5	40.6	5.01	9.09	40.7	7.87	32.9	39.4	5.18	18.62
			40	36.5	8.64	27.9	48.0	4.23	0.58	37.7	8.63	29.0	45.4	4.37	8.67	38.9	8.63	30.3	44.2	4.51	18.04
			45	36.1	9.34	26.8	52.9	3.87	0.54	37.2	9.33	27.9	50.3	3.99	8.40	38.4	9.33	29.1	49.2	4.12	17.59
			50	35.4	10.09	25.3	57.8	3.51	0.47	36.4	10.09	26.4	55.3	3.61	8.06	37.6	10.09	27.5	54.1	3.73	17.04
	2.21	21.68	15	41.8	5.75	36.0	23.9	7.27	2.17	43.5	5.93	37.6	21.2	7.34	11.01	45.2	5.91	39.3	19.8	7.65	21.68
			20	39.5	6.44	33.0	28.6	6.14	1.38	41.1	6.65	34.5	25.9	6.19	10.38	42.6	6.55	36.0	24.6	6.50	20.72
			25	40.5	6.96	33.6	33.7	5.83	1.06	42.0	6.95	35.0	30.9	6.04	9.91	43.6	6.97	36.6	29.7	6.25	19.98
			30	38.8	7.39	31.4	38.4	5.26	0.88	40.2	7.39	32.8	35.7	5.44	9.47	41.6	7.38	34.2	34.5	5.64	19.30
			35	40.0	7.90	32.1	43.6	5.06	0.71	40.1	7.89	32.2	40.7	5.08	9.09	41.5	7.89	33.6	39.5	5.26	18.62
			40	38.2	8.66	29.5	48.3	4.41	0.58	38.3	8.66	29.7	45.5	4.43	8.67	39.6	8.66	31.0	44.3	4.58	18.04
			45	36.7	9.36	27.3	53.0	3.92	0.54	37.8	9.35	28.5	50.4	4.05	8.40	39.1	9.34	29.7	49.2	4.18	17.59
			50	35.9	10.11	25.8	57.9	3.55	0.47	37.0	10.11	26.9	55.4	3.66	8.06	38.2	10.10	28.1	54.2	3.78	17.04
20	1.14	1.38	15	41.7	5.75	36.0	23.9	7.27	2.17	43.2	5.74	37.5	21.1	7.54	11.01	45.0	5.91	39.1	19.8	7.61	21.68
			20	39.4	6.44	33.0	28.6	6.13	1.38	40.8	6.43	34.4	25.9	6.35	10.38	42.4	6.55	35.8	24.6	6.47	20.72
			25	40.7	6.97	33.7	33.7	5.84	1.06	42.1	6.96	35.1	31.0	6.05	9.91	43.5	6.97	36.6	29.7	6.25	19.98
			30	39.0	7.39	31.6	38.4	5.27	0.88	40.2	7.39	32.9	35.8	5.45	9.47	41.6	7.38	34.2	34.5	5.64	19.30
			35	39.2	7.91	31.3	43.4	4.95	0.71	40.4	7.91	32.5	40.7	5.11	9.09	41.8	7.90	33.9	39.5	5.29	18.62
			40	37.5	8.68	28.8	48.2	4.32	0.58	38.6	8.68	30.0	45.6	4.45	8.67	11.8	8.67	3.1	44.3	1.36	18.04
			45	37.3	9.37	27.9	53.1	3.98	0.54	38.4	9.37	29.0	50.5	4.10	8.40	39.6	9.36	30.2	49.3	4.23	17.59
			50	36.5	10.13	26.4	58.0	3.60	0.47	37.6	10.13	27.4	55.4	3.71	8.06	38.7	10.12	28.6	54.2	3.82	17.04
	1.70	10.38	15	43.0	5.79	37.2	24.2	7.42	2.17	44.7	5.94	38.8	21.3	7.53	11.01	46.4	5.91	40.5	20.0	7.85	21.68
			20	40.6	6.48	34.1	28.8	6.26	1.38	42.2	6.65	35.6	26.1	6.35	10.38	43.7	6.55	37.1	24.7	6.67	20.72
			25	42.0	7.01	35.0	34.0	5.99	1.06	43.5	7.01	36.5	31.1	6.20	9.91	45.1	7.02	38.0	29.8	6.42	19.98
			30	40.2	7.45	32.7	38.7	5.39	0.88	41.6	7.44	34.1	35.9	5.59	9.47	43.0	7.43	35.6	34.7	5.79	19.30
			35	40.5	7.97	32.6	43.7	5.09	0.71	41.9	7.96	33.9	40.9	5.26	9.09	43.3	7.95	35.4	39.7	5.45	18.62
			40	38.7	8.74	30.0	48.5	4.43	0.58	40.0	8.73	31.3	45.8	4.58	8.67	41.3	8.73	32.6	44.5	4.74	18.04
			45	38.4	9.41	29.0	53.3	4.08	0.54	39.6	9.40	30.2	50.7	4.22	8.40	41.0	9.40	31.6	49.4	4.36	17.59
			50	37.6	10.17	27.4	58.2	3.70	0.47	38.7	10.17	28.6	55.6	3.81	8.06	40.0	10.17	29.8	54.4	3.93	17.04
	2.21	20.72	15	43.5	5.81	37.7	24.3	7.49	2.17	45.3	5.94	39.4	21.4	7.63	11.01	47.0	5.91	41.1	20.0	7.96	21.68
			20	41.1	6.51	34.6	29.0	6.32	1.38	42.8	6.65	36.1	26.1	6.43	10.38	44.3	6.55	37.7	24.8	6.76	20.72
			25	42.6	7.04	35.5	34.1	6.05	1.06	44.1	7.03	37.1	31.2	6.28	9.91	45.8	7.05	38.7	29.9	6.50	19.98
			30	40.7	7.47	33.3	38.8	5.46	0.88	42.2	7.47	34.7	36.0	5.65	9.47	43.7	7.46	36.3	34.7	5.86	19.30
			35	42.4	7.99	34.5	44.1	5.31	0.71	42.6	7.99	34.6	41.0	5.34	9.09	44.1	7.98	36.2	39.7	5.53	18.62
			40	40.5	8.76	31.7	48.8	4.62	0.58	40.7	8.76	31.9	45.9	4.64	8.67	42.1	8.76	33.3	44.6	4.80	18.04
			45	39.0	9.43	29.6	53.4	4.14	0.54	40.3	9.43	30.8	50.7	4.27	8.40	41.6	9.42	32.2	49.5	4.42	17.59
			50	38.1	10.19	27.9	58.3	3.74	0.47	39.3	10.19	29.1	55.7	3.86	8.06	40.6	10.19	30.4	54.4	3.99	17.04

Interpolation is permissible; extrapolation is not.
All entering air conditions are 27°C DB and 19°C WB in cooling and 20°C DB in heating.
AHRI/ISO certified conditions are 27°C DB and 19°C WB in cooling and 20°C DB in heating.
Table does not reflect fan or pump power corrections for AHRI/ISO conditions.
All performance data is based upon the lower voltage of dual voltage rated units.
Performance stated is at the rated power supply; performance may vary as the power supply varies from the rated.
Operation below 4°C EWT is based upon a 15% methanol antifreeze solution.
Operation below 16°C EWT requires optional insulated water/refrigerant circuit.
See performance correction tables for operating conditions other than those listed above.
Gray shaded area refers to calculations required to determine if heating water flow is sufficient for non-antifreeze systems.

ClimateMaster works continually to improve its products. As a result, the design and specifications of each product at the time of order may be changed without notice and may not be as described herein. Please contact ClimateMaster's Customer Service Department at +1-405-745-6000 for specific information on the current design and specifications. Statements and other information contained herein are not express warranties and do not form the basis of any bargain between the parties, but are merely ClimateMaster's opinion or commendation of its products. The latest version of this document is available at **climatemaster.com.**

CLIMATEMASTER®
Water-Source Heat Pump Systems

Performance Data - TMW340 - Cooling

Source			Load																			
				2.21 l/s						3.34 l/s						4.42 l/s					
EWT °C	Flow Rate l/s	WPD kPa	EWT °C	Output kW	Input kW	HR kW	LWT °C	EER W/W	WPD kPa	Output kW	Input kW	HR kW	LWT °C	EER W/W	WPD kPa	Out-put kW	Input kW	HR kW	LWT °C	EER W/W	WPD kPa
10	2.21	8.20	10							72.59	11.40	83.99	4.81	6.37	24.75	74.22	11.47	85.69	5.98	6.47	44.82
			15	75.48	11.36	86.84	6.82	6.64	7.58	78.73	11.45	90.18	9.37	6.88	23.72	80.28	11.49	91.77	10.65	6.99	42.61
			20	79.64	11.48	91.12	11.37	6.94	7.12	82.70	11.56	94.26	14.08	7.15	22.94	84.11	11.60	95.71	15.44	7.25	41.21
			25	84.60	11.61	96.21	15.84	7.29	6.60	87.29	11.68	98.97	18.76	7.47	21.96	88.50	11.72	100.22	20.21	7.55	39.51
			30	87.73	11.70	99.43	20.50	7.50	6.27	90.06	11.76	101.82	23.56	7.66	21.27	91.05	11.79	102.84	25.07	7.72	38.40
	3.34	24.75	10							73.61	10.50	84.11	4.73	7.01	24.75	75.25	10.53	85.78	5.92	7.15	44.82
			15	76.40	10.55	86.95	6.72	7.24	7.58	79.66	10.61	90.27	9.30	7.51	23.72	51.18	10.64	61.82	10.60	4.81	42.61
			20	80.45	10.62	91.07	11.29	7.58	7.12	83.46	10.67	94.13	14.03	7.82	22.94	84.87	10.69	95.56	15.40	7.94	41.21
			25	85.28	10.70	95.98	15.76	7.97	6.60	87.93	10.76	98.69	18.71	8.17	21.96	89.11	10.78	99.89	20.17	8.27	39.51
			30	88.33	10.76	99.09	20.43	8.21	6.27	90.61	10.80	101.41	23.52	8.39	21.27	91.60	10.82	102.42	25.04	8.47	38.40
	4.42	44.82	10							73.93	10.12	84.05	4.71	7.31	24.75	75.59	10.14	85.73	5.91	7.45	44.82
			15	76.74	10.16	86.90	6.69	7.55	7.58	80.01	10.21	90.22	9.28	7.84	23.72	81.53	10.22	91.75	10.58	7.98	42.61
			20	80.80	10.20	91.00	11.25	7.92	7.12	83.80	10.25	94.05	14.01	8.18	22.94	85.19	10.27	95.46	15.39	8.30	41.21
			25	85.60	10.27	95.87	15.73	8.33	6.60	88.22	10.32	98.54	18.69	8.55	21.96	89.38	10.33	99.71	20.16	8.65	39.51
			30	88.57	10.31	98.88	20.41	8.59	6.27	90.82	10.34	101.16	23.50	8.78	21.27	91.79	10.36	102.15	25.03	8.86	38.40
20	2.21	7.12	10							67.98	13.40	81.38	5.14	5.07	24.75	69.78	13.46	83.24	6.22	5.18	44.82
			15	71.58	13.48	85.06	7.25	5.31	7.58	75.18	13.58	88.76	9.62	5.54	23.72	76.93	13.63	90.56	10.83	5.64	42.61
			20	76.69	13.61	90.30	11.69	5.63	7.12	80.11	13.71	93.82	14.27	5.84	22.94	81.73	13.75	95.48	15.57	5.94	41.21
			25	82.41	13.78	96.19	16.07	5.98	6.60	85.45	13.86	99.31	18.89	6.17	21.96	86.78	13.90	100.68	20.30	6.24	39.51
			30	86.15	13.87	100.02	20.67	6.21	6.27	88.70	13.94	102.64	23.66	6.36	21.27	89.78	13.98	103.76	25.14	6.42	38.40
	3.34	22.94	10							69.72	12.66	82.38	5.01	5.51	24.75	71.52	12.69	84.21	6.13	5.64	44.82
			15	73.12	12.72	85.84	7.08	5.75	7.58	76.66	12.77	89.43	9.52	6.00	23.72	78.35	12.81	91.16	10.76	6.12	42.61
			20	77.95	12.78	90.73	11.56	6.10	7.12	81.27	12.84	94.11	14.19	6.33	22.94	82.82	12.87	95.69	15.51	6.44	41.21
			25	83.41	12.89	96.30	15.97	6.47	6.60	86.29	12.94	99.23	18.83	6.67	21.96	87.56	12.96	100.52	20.26	6.76	39.51
			30	86.86	12.94	99.80	20.59	6.71	6.27	89.26	12.99	102.25	23.62	6.87	21.27	90.22	13.00	103.22	25.11	6.94	38.40
	4.42	41.26	10							70.49	12.31	82.80	4.96	5.73	24.75	72.27	12.33	84.60	6.09	5.86	44.82
			15	73.77	12.35	86.12	7.01	5.97	7.58	77.29	12.40	89.69	9.47	6.23	23.72	78.95	12.42	91.37	10.72	6.36	42.61
			20	78.47	12.39	90.86	11.50	6.33	7.12	81.75	12.44	94.19	14.15	6.57	22.94	83.27	12.45	95.72	15.49	6.69	41.21
			25	83.82	12.46	96.28	15.92	6.73	6.60	86.64	12.50	99.14	18.80	6.93	21.96	87.89	12.52	100.41	20.24	7.02	39.51
			30	87.17	12.50	99.67	20.56	6.97	6.27	89.51	12.54	102.05	23.60	7.14	21.27	90.50	12.54	103.04	25.10	7.22	38.40
30	2.21	6.29	10							62.16	15.54	77.70	5.55	4.00	24.75	63.98	15.60	79.58	6.53	4.10	44.82
			15	66.40	15.66	82.06	7.81	4.24	7.58	70.10	15.78	85.88	9.99	4.44	23.72	71.93	15.83	87.76	11.10	4.54	42.61
			20	72.29	15.83	88.12	12.17	4.57	7.12	75.98	15.94	91.92	14.57	4.77	22.94	77.78	15.99	93.77	15.79	4.86	41.21
			25	78.83	16.02	94.85	16.46	4.92	6.60	82.36	16.13	98.49	19.11	5.11	21.96	84.02	16.19	100.21	20.45	5.19	39.51
			30	83.64	16.16	99.80	20.94	5.18	6.27	86.99	16.27	103.26	23.78	5.35	21.27	88.54	16.32	104.86	25.20	5.43	38.40
	3.34	21.29	10							64.20	14.81	79.01	5.41	4.33	24.75	66.09	14.84	80.93	6.42	4.45	44.82
			15	68.33	14.89	83.22	7.60	4.59	7.58	72.11	14.95	87.06	9.84	4.82	23.72	73.97	14.99	88.96	10.99	4.93	42.61
			20	74.10	14.97	89.07	11.97	4.95	7.12	77.78	15.04	92.82	14.44	5.17	22.94	79.54	15.08	94.62	15.69	5.27	41.21
			25	80.43	15.09	95.52	16.29	5.33	6.60	83.83	15.16	98.99	19.00	5.53	21.96	85.39	15.19	100.58	20.38	5.62	39.51
			30	84.89	15.17	100.06	20.80	5.60	6.27	87.96	15.23	103.19	23.71	5.78	21.27	89.33	15.26	104.59	25.16	5.85	38.40
	4.42	38.47	10							65.14	14.46	79.60	5.34	4.50	24.75	67.04	14.49	81.53	6.37	4.63	44.82
			15	69.21	14.52	83.73	7.50	4.77	7.58	73.03	14.58	87.61	9.78	5.01	23.72	74.87	14.60	89.47	10.95	5.13	42.61
			20	74.90	14.57	89.47	11.89	5.14	7.12	78.55	14.63	93.18	14.38	5.37	22.94	80.30	14.64	94.94	15.65	5.48	41.21
			25	81.11	14.66	95.77	16.21	5.53	6.60	84.42	14.71	99.13	18.96	5.74	21.96	85.91	14.73	100.64	20.35	5.83	39.51
			30	85.36	14.70	100.06	20.75	5.81	6.27	88.26	14.75	103.01	23.69	5.98	21.27	89.54	14.77	104.31	25.15	6.06	38.40
40	2.21	5.60	10							53.64	18.22	71.86	6.16	2.94	24.75	55.47	18.29	73.76	7.00	3.03	44.82
			15	59.15	18.42	77.57	8.59	3.21	7.58	63.12	18.55	81.67	10.49	3.40	23.72	65.11	18.62	83.73	11.47	3.50	42.61
			20	66.44	18.66	85.10	12.80	3.56	7.12	70.31	18.79	89.10	14.97	3.74	22.94	72.12	18.85	90.97	16.09	3.83	41.21
			25	73.52	18.90	92.42	17.04	3.89	6.60	75.56	18.90	94.46	19.60	4.00	21.96	77.16	18.96	96.12	20.82	4.07	39.51
			30																		
	3.34	19.53	10							56.30	17.46	73.76	5.97	3.22	24.75	58.13	17.50	75.63	6.85	3.32	44.82
			15	61.39	17.57	78.96	8.35	3.49	7.58	65.26	17.65	82.91	10.33	3.70	23.72	67.21	17.69	84.90	11.36	3.80	42.61
			20	68.21	17.68	85.89	12.61	3.86	7.12	72.13	17.77	89.90	14.84	4.06	22.94	74.01	17.81	91.82	15.99	4.16	41.21
			25	75.39	17.84	93.23	16.83	4.23	6.60	78.96	17.92	96.88	19.35	4.41	21.96	80.57	17.96	98.53	20.64	4.49	39.51
			30	80.39	17.93	98.32	21.29	4.48	6.27	77.06	17.83	94.89	24.49	4.32	21.27	78.88	17.88	96.76	25.73	4.41	38.40
	4.42	36.32	10																		
			15	62.45	17.18	79.63	8.24	3.64	7.58	66.33	17.23	83.56	10.26	3.85	23.72	68.28	17.26	85.54	11.30	3.96	42.61
			20	69.15	17.25	86.40	12.51	4.01	7.12	73.06	17.31	90.37	14.77	4.22	22.94	74.98	17.34	92.32	15.94	4.32	41.21
			25	76.30	17.37	93.67	16.74	4.39	6.60	80.01	17.42	97.43	19.28	4.59	21.96	81.73	17.46	99.19	20.57	4.68	39.51
			30	81.52	17.42	98.94	21.17	4.68	6.27	84.83	17.48	102.31	23.93	4.85	21.27	86.31	17.51	103.82	25.33	4.93	38.40

Interpolation is permissible; extrapolation is not.
All entering air conditions are 27°C DB and 19°C WB in cooling and 20°C DB in heating.
AHRI/ISO certified conditions are 27°C DB and 19°C WB in cooling and 20°C DB in heating.
Table does not reflect fan or pump power corrections for AHRI/ISO conditions.
All performance data is based upon the lower voltage of dual voltage rated units.
Performance stated is at the rated power supply; performance may vary as the power supply varies from the rated.
Operation below 4°C EWT is based upon a 15% methanol antifreeze solution.
Operation below 16°C EWT requires optional insulated water/refrigerant circuit.
See performance correction tables for operating conditions other than those listed above.
Gray shaded area refers to calculations required to determine if heating water flow is sufficient for non-antifreeze systems.

ClimateMaster works continually to improve its products. As a result, the design and specifications of each product at the time of order may be changed without notice and may not be as described herein. Please contact ClimateMaster's Customer Service Department at +1-405-745-6000 for specific information on the current design and specifications. Statements and other information contained herein are not express warranties and do not form the basis of any bargain between the parties, but are merely ClimateMaster's opinion or commendation of its products. The latest version of this document is available at **climatemaster.com.**

CLIMATEMASTER
Water-Source Heat Pump Systems

Performance Data - TMW340 - Heating

Source			Load																			
				2.21 l/s						3.34 l/s						4.42 l/s					
EWT °C	Flow Rate l/s	WPD kPa	EWT °C	Output kW	Input kW	HE kW	LWT °C	COP W/W	WPD kPa	Output kW	Input kW	HE kW	LWT °C	COP W/W	WPD kPa	Output kW	Itput kW	HE kW	LWT °C	COP W/W	WPD kPa
-5	4.42	50.93	15	58.11	10.90	47.21	21.27	5.33	7.66	60.99	11.79	49.20	19.35	5.17	23.87	62.22	10.89	51.33	18.35	5.71	43.00
			20	55.51	12.21	43.30	26.03	4.55	7.10	58.31	13.20	45.11	24.18	4.42	22.88	59.14	12.07	47.07	23.21	4.90	41.10
			25	55.21	13.22	41.99	31.01	4.18	6.65	56.97	13.22	43.75	29.09	4.31	22.04	58.86	13.23	45.63	28.19	4.45	39.63
0	2.21	11.12	15	63.28	10.99	52.29	21.81	5.76	7.66	65.34	10.99	54.35	19.64	5.95	23.87	68.30	11.77	56.53	18.68	5.80	43.00
			20	60.25	12.30	47.95	26.55	4.90	7.10	62.14	12.30	49.84	24.46	5.05	22.88	64.87	13.04	51.83	23.52	4.97	41.10
			25	59.36	13.31	46.05	31.44	4.46	6.65	61.16	13.30	47.86	29.37	4.60	22.04	63.09	13.32	49.77	28.41	4.74	39.63
			30	57.23	14.13	43.10	36.23	4.05	6.27	58.91	14.12	44.79	34.23	4.17	21.23	60.69	14.11	46.58	33.30	4.30	38.42
			35	54.52	15.11	39.41	40.98	3.61	5.92	56.04	15.10	40.94	39.05	3.71	20.42	57.67	15.09	42.58	38.15	3.82	37.32
	3.34	27.57	15	65.85	11.04	54.81	22.08	5.96	7.66	68.91	11.81	57.10	19.90	5.83	23.87	71.28	11.77	59.51	18.83	6.06	43.00
			20	62.63	12.36	50.27	26.81	5.07	7.10	65.59	13.23	52.36	24.70	4.96	22.88	67.61	13.05	54.56	23.67	5.18	41.10
			25	61.74	13.37	48.37	31.68	4.62	6.65	63.71	13.36	50.35	29.55	4.77	22.04	65.86	13.37	52.49	28.56	4.93	39.63
			30	59.45	14.18	45.27	36.47	4.19	6.27	61.31	14.18	47.13	34.40	4.32	21.23	63.29	14.17	49.12	33.44	4.47	38.42
			35	56.58	15.16	41.42	41.19	3.73	5.92	58.29	15.16	43.13	39.20	3.84	20.42	60.10	15.16	44.94	38.28	3.96	37.32
	4.42	49.07	15	67.12	11.07	56.05	22.22	6.06	7.66	70.27	11.82	58.45	19.99	5.95	23.87	72.76	11.77	60.99	18.91	6.18	43.00
			20	63.79	12.39	51.40	26.94	5.15	7.10	66.82	13.23	53.59	24.79	5.05	22.88	68.97	13.05	55.92	23.74	5.29	41.10
			25	62.90	13.39	49.51	31.80	4.70	6.65	65.00	13.39	51.61	29.64	4.85	22.04	67.26	13.41	53.85	28.63	5.02	39.63
			30	60.55	14.21	46.34	36.59	4.26	6.27	62.52	14.21	48.31	34.49	4.40	21.23	64.60	14.21	50.39	33.51	4.55	38.42
			35	59.20	15.19	44.01	41.46	3.90	5.92	59.42	15.19	44.23	39.28	3.91	20.42	61.34	15.19	46.15	38.34	4.04	37.32
5	2.21	10.57	15	68.98	11.10	57.88	22.41	6.21	7.66	71.28	11.09	60.19	20.05	6.43	23.87	74.39	11.77	62.62	18.99	6.32	43.00
			20	65.50	12.43	53.07	27.12	5.27	7.10	67.61	12.42	55.19	24.85	5.44	22.88	70.48	13.06	57.42	23.82	5.40	41.10
			25	65.45	13.45	52.00	32.07	4.87	6.65	67.51	13.45	54.06	29.81	5.02	22.04	69.68	13.46	56.22	28.75	5.18	39.63
			30	62.95	14.28	48.67	36.84	4.41	6.27	64.87	14.27	50.60	34.65	4.55	21.23	66.88	14.26	52.62	33.63	4.69	38.42
			35	60.89	15.28	45.61	41.63	3.98	5.92	62.66	15.27	47.39	39.50	4.10	20.42	64.57	15.26	49.31	38.51	4.23	37.32
	3.34	26.36	15	71.61	11.16	60.45	22.69	6.42	7.66	74.82	11.83	62.99	20.30	6.32	23.87	77.45	11.78	65.67	19.15	6.57	43.00
			20	67.92	12.49	55.43	27.39	5.44	7.10	71.01	13.25	57.76	25.09	5.36	22.88	73.29	13.07	60.22	23.97	5.61	41.10
			25	67.94	13.52	54.42	32.33	5.03	6.65	70.20	13.51	56.69	29.99	5.20	22.04	72.64	13.53	59.11	28.91	5.37	39.63
			30	65.29	14.35	50.94	37.10	4.55	6.27	67.40	14.34	53.06	34.83	4.70	21.23	69.67	14.34	55.33	33.78	4.86	38.42
			35	63.18	15.35	47.83	41.87	4.12	5.92	65.15	15.34	49.81	39.67	4.25	20.42	67.26	15.33	51.93	38.65	4.39	37.32
	4.42	46.94	15	72.89	11.19	61.70	22.82	6.51	7.66	76.19	11.83	64.36	20.40	6.44	23.87	78.96	11.78	67.18	19.23	6.70	43.00
			20	69.11	12.53	56.58	27.52	5.52	7.10	72.25	13.25	59.00	25.19	5.45	22.88	74.67	13.07	61.60	24.05	5.71	41.10
			25	69.17	13.55	55.62	32.45	5.10	6.65	71.57	13.55	58.02	30.09	5.28	22.04	74.10	13.56	60.54	28.98	5.46	39.63
			30	66.45	14.38	52.07	37.22	4.62	6.27	68.68	14.38	54.30	34.92	4.78	21.23	71.03	14.37	56.66	33.85	4.94	38.42
			35	66.14	15.37	50.77	42.17	4.30	5.92	66.40	15.37	51.03	39.76	4.32	20.42	68.62	15.37	53.25	38.71	4.46	37.32
10	2.21	8.19	15	74.27	11.23	63.04	22.97	6.61	7.66	76.82	11.21	65.61	20.44	6.85	23.87	80.07	11.79	68.28	19.29	6.79	43.00
			20	70.37	12.57	57.80	27.66	5.60	7.10	72.71	12.56	60.15	25.22	5.79	22.88	75.68	13.07	62.61	24.11	5.79	41.10
			25	71.16	13.60	57.56	32.66	5.23	6.65	73.47	13.59	59.88	30.22	5.41	22.04	75.92	13.61	62.31	29.08	5.58	39.63
			30	68.31	14.44	53.87	37.42	4.73	6.27	70.47	14.43	56.04	35.05	4.88	21.23	72.73	14.42	58.31	33.94	5.04	38.42
			35	67.01	15.46	51.55	42.26	4.33	5.92	69.03	15.44	53.59	39.93	4.47	20.42	71.18	15.43	55.75	38.85	4.61	37.32
			40	64.45	16.96	47.49	47.04	3.80	5.62	66.33	16.94	49.39	44.78	3.92	19.64	68.30	16.93	51.37	43.72	4.03	36.43
			45	63.44	18.44	45.00	51.96	3.44	5.39	65.24	18.44	46.80	49.72	3.54	18.92	67.11	18.43	48.68	48.67	3.64	35.85
			50	62.45	19.94	42.51	56.89	3.13	5.12	64.14	19.93	44.21	54.67	3.22	18.06	65.91	19.93	45.98	53.63	3.31	35.16
	3.34	24.76	15	76.92	11.29	65.63	23.24	6.81	7.66	80.23	11.84	68.39	20.68	6.78	23.87	83.13	11.80	71.33	19.45	7.04	43.00
			20	72.84	12.65	60.19	27.92	5.76	7.10	75.97	13.26	62.71	25.45	5.73	22.88	78.49	13.08	65.41	24.26	6.00	41.10
			25	73.75	13.68	60.07	32.93	5.39	6.65	76.27	13.67	62.60	30.41	5.58	22.04	78.97	13.69	65.28	29.24	5.77	39.63
			30	70.74	14.51	56.23	37.68	4.88	6.27	73.09	14.51	58.58	35.23	5.04	21.23	75.59	14.50	61.09	34.09	5.21	38.42
			35	69.48	15.53	53.95	42.51	4.47	5.92	71.69	15.52	56.17	40.12	4.62	20.42	74.09	15.51	58.58	39.00	4.78	37.32
			40	66.73	17.03	49.70	47.29	3.92	5.62	68.79	17.03	51.76	44.96	4.04	19.64	71.00	17.02	53.98	43.87	4.17	36.43
			45	65.55	18.49	47.06	52.18	3.55	5.39	67.50	18.48	49.02	49.88	3.65	18.92	69.61	18.48	51.13	48.80	3.77	35.85
			50	64.44	19.99	44.45	57.10	3.22	5.12	66.30	19.99	46.31	54.82	3.32	18.06	68.29	19.98	48.31	53.75	3.42	35.16
	4.42	44.84	15	78.18	11.32	66.86	23.38	6.91	7.66	81.59	11.84	69.75	20.77	6.89	23.87	84.63	11.80	72.83	19.53	7.17	43.00
			20	73.99	12.68	61.31	28.05	5.84	7.10	77.22	13.26	63.96	25.54	5.82	22.88	79.87	13.08	66.79	24.33	6.11	41.10
			25	75.01	13.71	61.30	33.06	5.47	6.65	77.65	13.71	63.94	30.50	5.66	22.04	80.45	13.72	66.73	29.31	5.86	39.63
			30	71.93	14.55	57.38	37.80	4.94	6.27	74.39	14.55	59.84	35.32	5.11	21.23	77.01	14.55	62.46	34.17	5.29	38.42
			35	72.78	15.57	57.21	42.85	4.67	5.92	73.05	15.56	57.49	40.21	4.69	20.42	75.54	15.55	59.99	39.07	4.86	37.32
			40	69.78	17.07	52.71	47.62	4.09	5.62	70.04	17.07	52.97	45.04	4.10	19.64	72.34	17.07	55.27	43.94	4.24	36.43
			45	66.61	18.52	48.09	52.29	3.60	5.39	68.66	18.51	50.15	49.95	3.71	18.92	70.86	18.51	52.35	48.86	3.83	35.85
			50	65.46	20.02	45.44	57.20	3.27	5.12	67.38	20.01	47.37	54.89	3.37	18.06	69.46	20.01	49.45	53.81	3.47	35.16

Interpolation is permissible; extrapolation is not.
All entering air conditions are 27°C DB and 19°C WB in cooling and 20°C DB in heating.
AHRI/ISO certified conditions are 27°C DB and 19°C WB in cooling and 20°C DB in heating.
Table does not reflect fan or pump power corrections for AHRI/ISO conditions.
All performance data is based upon the lower voltage of dual voltage rated units.
Performance stated is at the rated power supply; performance may vary as the power supply varies from the rated.
Operation below 4°C EWT is based upon a 15% methanol antifreeze solution.
Operation below 16°C EWT requires optional insulated water/refrigerant circuit.
See performance correction tables for operating conditions other than those listed above.
Gray shaded area refers to calculations required to determine if heating water flow is sufficient for non-antifreeze systems.

Table Continued on Next Page

ClimateMaster works continually to improve its products. As a result, the design and specifications of each product at the time of order may be changed without notice and may not be as described herein. Please contact ClimateMaster's Customer Service Department at +1-405-745-6000 for specific information on the current design and specifications. Statements and other information contained herein are not express warranties and do not form the basis of any bargain between the parties, but are merely ClimateMaster's opinion or commendation of its products. The latest version of this document is available at **climatemaster.com.**

CLIMATEMASTER
Water-Source Heat Pump Systems

Performance Data - TMW340 - Heating

Table Continued from Previous Page

Source			Load																			
				2.21 l/s						3.34 l/s						4.42 l/s					
EWT ºC	Flow Rate l/s	WPD kPa	EWT ºC	Output kW	Input kW	HE kW	LWT ºC	COP W/W	WPD kPa	Output kW	Input kW	HE kW	LWT ºC	COP W/W	WPD kPa	Output kW	Input kW	HE kW	LWT ºC	COP W/W	WPD kPa
15	2.21	7.66	15	79.79	11.37	68.42	23.54	7.02	7.66	82.56	11.36	71.20	20.83	7.27	23.87	85.97	11.80	74.17	19.60	7.29	43.00
			20	75.47	12.73	62.74	28.21	5.93	7.10	78.00	12.72	65.28	25.60	6.13	22.88	81.10	13.08	68.02	24.40	6.20	41.10
			25	77.22	13.79	63.43	33.29	5.60	6.65	79.79	13.78	66.01	30.65	5.79	22.04	82.51	13.79	68.72	29.42	5.98	39.63
			30	74.00	14.63	59.37	38.03	5.06	6.27	76.41	14.63	61.78	35.47	5.22	21.23	78.92	14.61	64.31	34.27	5.40	38.42
			35	73.64	15.66	57.98	42.04	4.70	5.92	75.95	15.65	60.30	40.40	4.85	20.42	78.41	15.64	62.77	39.22	5.01	37.32
			40	70.61	17.18	53.43	47.70	4.11	5.62	72.73	17.17	55.56	45.24	4.24	19.64	74.98	17.16	57.82	44.08	4.37	36.43
			45	69.97	18.61	51.36	52.63	3.76	5.39	72.05	18.60	53.45	50.18	3.87	18.92	74.19	18.58	55.61	49.03	3.99	35.85
			50	68.64	20.12	48.52	57.54	3.41	5.12	70.59	20.11	50.48	55.11	3.51	18.06	72.62	20.09	52.53	53.98	3.61	35.16
	3.34	23.87	15	82.34	11.45	70.89	23.81	7.19	7.66	85.79	11.86	73.93	21.06	7.23	23.87	88.95	11.81	77.14	19.75	7.53	43.00
			20	77.83	12.82	65.01	28.47	6.07	7.10	81.07	13.29	67.78	25.82	6.10	22.88	83.83	13.09	70.74	24.55	6.40	41.10
			25	79.82	13.87	65.95	33.56	5.75	6.65	82.61	13.87	68.74	30.84	5.96	22.04	85.59	13.88	71.71	29.58	6.17	39.63
			30	76.44	14.72	61.72	38.29	5.19	6.27	79.06	14.71	64.35	35.65	5.37	21.23	81.82	14.71	67.11	34.43	5.56	38.42
			35	76.25	15.75	60.50	43.21	4.84	5.92	78.78	15.74	63.04	40.60	5.01	20.42	81.48	15.74	65.74	39.38	5.18	37.32
			40	73.01	17.27	55.74	47.97	4.23	5.62	75.35	17.26	58.09	45.42	4.37	19.64	77.83	17.26	60.57	44.24	4.51	36.43
			45	72.23	18.67	53.56	52.85	3.87	5.39	74.47	18.66	55.81	50.34	3.99	18.92	76.86	18.66	58.20	49.16	4.12	35.85
			50	70.78	20.18	50.60	57.78	3.51	5.12	72.89	20.17	52.72	55.27	3.61	18.06	75.16	20.17	54.99	54.11	3.73	35.16
	4.42	43.00	15	83.56	11.49	72.07	23.94	7.27	7.66	87.06	11.86	75.20	21.15	7.34	23.87	90.35	11.81	78.54	19.83	7.65	43.00
			20	78.96	12.87	66.09	28.59	6.14	7.10	82.25	13.29	68.96	25.90	6.19	22.88	85.11	13.09	72.02	24.62	6.50	41.10
			25	81.06	13.91	67.15	33.69	5.83	6.65	83.97	13.90	70.07	30.94	6.04	22.04	87.10	13.93	73.17	29.66	6.25	39.63
			30	77.62	14.77	62.85	38.41	5.26	6.27	80.35	14.77	65.58	35.74	5.44	21.23	83.22	14.75	68.47	34.50	5.64	38.42
			35	79.91	15.80	64.11	43.58	5.06	5.92	80.19	15.78	64.41	40.69	5.08	20.42	83.01	15.78	67.23	39.46	5.26	37.32
			40	76.39	17.32	59.07	48.33	4.41	5.62	76.68	17.32	59.36	45.52	4.43	19.64	79.26	17.32	61.94	44.31	4.58	36.43
			45	73.33	18.71	54.62	52.96	3.92	5.39	75.65	18.69	56.96	50.42	4.05	18.92	78.16	18.68	59.48	49.23	4.18	35.85
			50	71.82	20.22	51.60	57.87	3.55	5.12	74.03	20.21	53.82	55.35	3.66	18.06	76.39	20.20	56.19	54.18	3.78	35.16
20	2.21	7.10	15	83.48	11.49	71.99	23.93	7.27	7.66	86.43	11.47	74.96	21.10	7.54	23.87	89.93	11.81	78.12	19.81	7.61	43.00
			20	78.89	12.87	66.02	28.59	6.13	7.10	81.58	12.85	68.73	25.86	6.35	22.88	84.73	13.09	71.64	24.60	6.47	41.10
			25	81.37	13.93	67.44	33.72	5.84	6.65	84.11	13.91	70.20	30.95	6.05	22.04	87.06	13.94	73.12	29.66	6.25	39.63
			30	77.90	14.78	63.12	38.44	5.27	6.27	80.49	14.78	65.71	35.75	5.45	21.23	83.20	14.76	68.44	34.50	5.64	38.42
			35	78.35	15.82	62.53	43.43	4.95	5.92	80.85	15.81	65.04	40.74	5.11	20.42	83.52	15.80	67.72	39.48	5.29	37.32
			40	74.98	17.36	57.62	48.18	4.32	5.62	77.28	17.35	59.93	45.56	4.45	19.64	23.58	17.34	6.24	44.34	1.36	36.43
			45	74.54	18.74	55.80	53.09	3.98	5.39	76.81	18.73	58.08	50.49	4.10	18.92	79.18	18.72	60.46	49.28	4.23	35.85
			50	72.98	20.26	52.72	58.00	3.60	5.12	75.11	20.25	54.86	55.43	3.71	18.06	77.35	20.24	57.11	54.23	3.82	35.16
	3.34	22.88	15	85.92	11.58	74.34	24.19	7.42	7.66	89.42	11.87	77.55	21.31	7.53	23.87	92.76	11.81	80.95	19.95	7.85	43.00
			20	81.13	12.96	68.17	28.83	6.26	7.10	84.40	13.29	71.11	26.06	6.35	22.88	87.34	13.10	74.24	24.74	6.67	41.10
			25	83.94	14.02	69.92	33.98	5.99	6.65	86.92	14.02	72.90	31.14	6.20	22.04	90.10	14.03	76.07	29.81	6.42	39.63
			30	80.33	14.89	65.44	38.70	5.39	6.27	83.11	14.88	68.23	35.94	5.59	21.23	86.06	14.86	71.20	34.65	5.79	38.42
			35	81.04	15.93	65.11	43.70	5.09	5.92	83.79	15.92	67.87	40.94	5.26	20.42	86.68	15.90	70.78	39.65	5.45	37.32
			40	77.46	17.47	59.99	48.45	4.43	5.62	79.99	17.46	62.53	45.75	4.58	19.64	82.66	17.45	65.21	44.50	4.74	36.43
			45	76.86	18.82	58.04	53.32	4.08	5.39	79.29	18.80	60.49	50.66	4.22	18.92	81.90	18.80	63.10	49.42	4.36	35.85
			50	75.17	20.34	54.83	58.22	3.70	5.12	77.47	20.33	57.14	55.59	3.81	18.06	79.94	20.33	59.61	54.36	3.93	35.16
	4.42	41.10	15	87.07	11.62	75.45	24.31	7.49	7.66	90.63	11.88	78.75	21.40	7.63	23.87	94.08	11.82	82.26	20.02	7.96	43.00
			20	82.20	13.01	69.19	28.95	6.32	7.10	85.50	13.29	72.21	26.14	6.43	22.88	88.54	13.10	75.44	24.81	6.76	41.10
			25	85.14	14.07	71.07	34.11	6.05	6.65	88.23	14.06	74.17	31.23	6.28	22.04	91.56	14.09	77.47	29.89	6.50	39.63
			30	81.45	14.93	66.52	38.83	5.46	6.27	84.35	14.93	69.42	36.03	5.65	21.23	87.42	14.92	72.50	34.72	5.86	38.42
			35	84.88	15.97	68.91	44.10	5.31	5.92	85.23	15.97	69.26	41.04	5.34	20.42	88.28	15.96	72.32	39.73	5.53	37.32
			40	81.01	17.52	63.49	48.83	4.62	5.62	81.35	17.52	63.83	45.85	4.64	19.64	84.15	17.52	66.63	44.57	4.80	36.43
			45	77.96	18.85	59.11	53.43	4.14	5.39	80.52	18.85	61.67	50.74	4.27	18.92	83.23	18.84	64.39	49.49	4.42	35.85
			50	76.22	20.38	55.84	58.34	3.74	5.12	78.64	20.38	58.26	55.67	3.86	18.06	81.21	20.37	60.84	54.43	3.99	35.16

Interpolation is permissible; extrapolation is not.
All entering air conditions are 27°C DB and 19°C WB in cooling and 20°C DB in heating.
AHRI/ISO certified conditions are 27°C DB and 19°C WB in cooling and 20°C DB in heating.
Table does not reflect fan or pump power corrections for AHRI/ISO conditions.
All performance data is based upon the lower voltage of dual voltage rated units.
Performance stated is at the rated power supply; performance may vary as the power supply varies from the rated.
Operation below 4°C EWT is based upon a 15% methanol antifreeze solution.
Operation below 16°C EWT requires optional insulated water/refrigerant circuit.
See performance correction tables for operating conditions other than those listed above.
Gray shaded area refers to calculations required to determine if heating water flow is sufficient for non-antifreeze systems.

ClimateMaster works continually to improve its products. As a result, the design and specifications of each product at the time of order may be changed without notice and may not be as described herein. Please contact ClimateMaster's Customer Service Department at +1-405-745-6000 for specific information on the current design and specifications. Statements and other information contained herein are not express warranties and do not form the basis of any bargain between the parties, but are merely ClimateMaster's opinion or commendation of its products. The latest version of this document is available at **climatemaster.com.**

ClimateMaster
Water-Source Heat Pump Systems

Antifreeze Correction Table

Antifreeze Type	Antifreeze %	Cooling EWT 32°C			Heating EWT -1°C		WPD Corr. Fct. EWT -1°C
		Total Cap	Sens Cap	Power	Htg Cap	Power	
Water	0	1.000	1.000	1.000	1.000	1.000	1.000
Propylene Glycol	5	0.995	0.995	1.003	0.989	0.997	1.070
	15	0.986	0.986	1.009	0.968	0.990	1.210
	25	0.978	0.978	1.014	0.947	0.983	1.360
Methanol	5	0.997	0.997	1.002	0.989	0.997	1.070
	15	0.990	0.990	1.007	0.968	0.990	1.160
	25	0.982	0.982	1.012	0.949	0.984	1.220
Ethanol	5	0.998	0.998	1.002	0.981	0.994	1.140
	15	0.994	0.994	1.005	0.944	0.983	1.300
	25	0.986	0.986	1.009	0.917	0.974	1.360
Ethylene Glycol	5	0.998	0.998	1.002	0.993	0.998	1.040
	15	0.994	0.994	1.004	0.980	0.994	1.120
	25	0.988	0.988	1.008	0.966	0.990	1.200

ClimateMaster works continually to improve its products. As a result, the design and specifications of each product at the time of order may be changed without notice and may not be as described herein. Please contact ClimateMaster's Customer Service Department at +1-405-745-6000 for specific information on the current design and specifications. Statements and other information contained herein are not express warranties and do not form the basis of any bargain between the parties, but are merely ClimateMaster's opinion or commendation of its products. The latest version of this document is available at **climatemaster.com.**

CLIMATEMASTER
Water-Source Heat Pump Systems

Physical & Electrical Data

Physical Data

Model	TMW036	TMW060	TMW120	TMW170	TMW340
Compressor (qty)	Scroll (1)		Scroll (2)	Scroll (1)	Scroll (2)
Factory Charge HFC-410A [kg] Per Circuit	2.04	2.83	2.83	6.8	6.8
Commercial FPT (in) Load/Source	¾	1	1½	2	
HWG Water In/Out FPT (in)	½			N/A	
Weight - Operating, [kg]	158	163	329	358	604
Weight - Packaged, [kg]	169	175	349	363	608
Water Volume (Source)					
Liters	3.64	5.04	10.02	13.27	25.44

Dual isolated compressor mounting
Balanced port expansion valve (TXV)
Compressor on (green) and fault (red) light
FPT - Female Pipe Thread

Unit Maximum Water Working Pressure	
Options	Max Working Pressure [kPa]
Base Unit	2,068

Electrical Data

Model	Voltage Code	Voltage	Voltage Min/Max	Compressor			Total Unit FLA	Min Circuit Amps	Max Fuse/ HACR
				QTY	RLA	LRA			
TM036	V	220-240/50/1	198/264	1	13.5	67	13.5	16.9	30
	U	380-420/50/3	342/462	1	5.4	38	5.4	6.8	15
TMW060	U	380-420/50/3	342/462	1	7.8	51.5	7.8	9.8	15
TMW120	U	380-420/50/3	342/462	2	7.8	51.5	15.6	17.6	25
TMW170	U	380-420/50/3	342/462	1	20.7	118	20.7	25.9	45
TMW340	U	380-420/50/3	342/462	2	20.7	118	41.4	46.6	60

ClimateMaster works continually to improve its products. As a result, the design and specifications of each product at the time of order may be changed without notice and may not be as described herein. Please contact ClimateMaster's Customer Service Department at +1-405-745-6000 for specific information on the current design and specifications. Statements and other information contained herein are not express warranties and do not form the basis of any bargain between the parties, but are merely ClimateMaster's opinion or commendation of its products. The latest version of this document is available at **climatemaster.com.**

CLIMATEMASTER
Water-Source Heat Pump Systems

Dimensional Data - TMW360 - 120

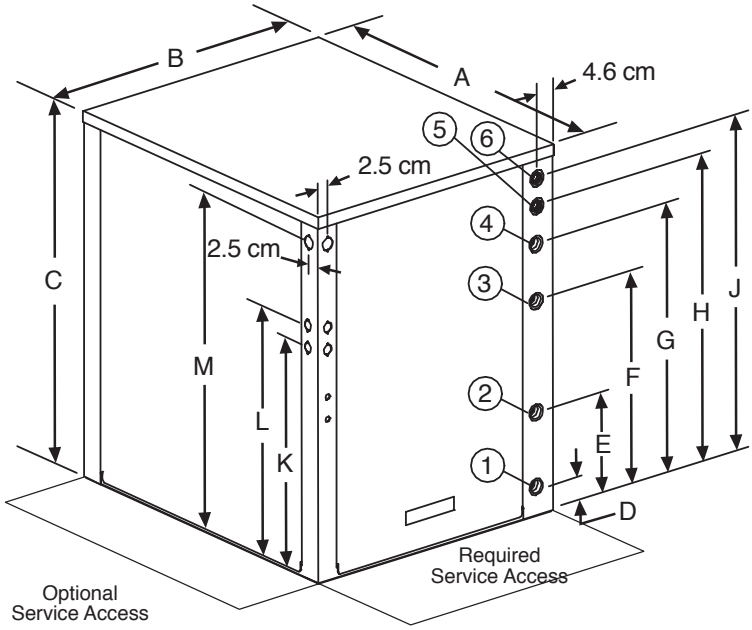

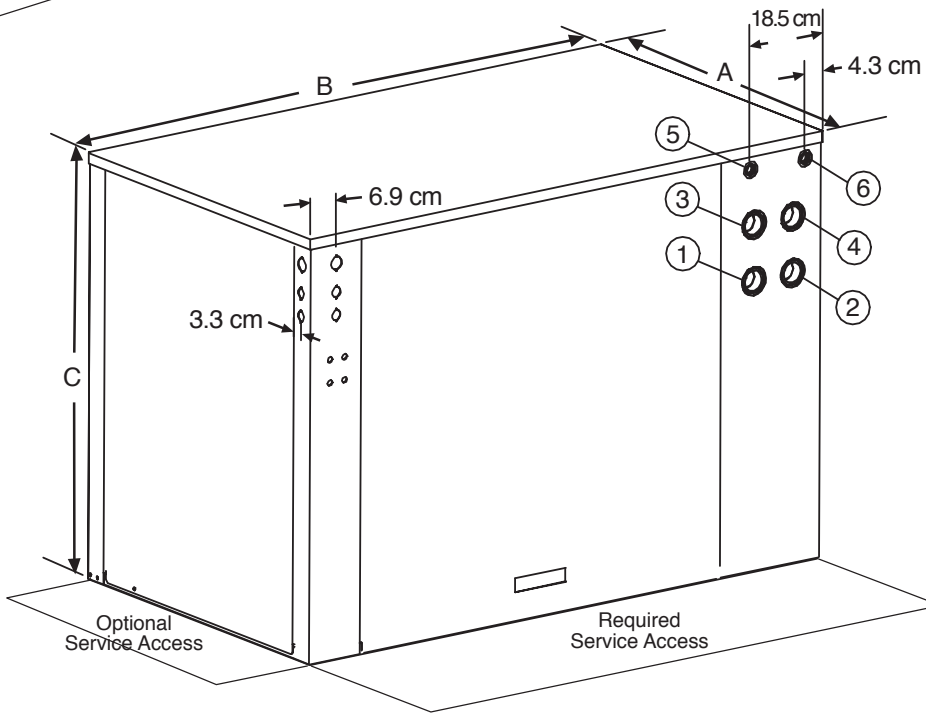

Water to Water		Overall Cabinet			Water Connections						Electric Access Plugs		
					1	2	3	4	5	6			
		A Depth	B Width	C Height	D Source (Outdoor) Water In	E Source (Outdoor) Water Out	F Load (Indoor) Water In	G Load (Indoor) Water Out	H HWG Return In	J HWG Water Out	K Low Voltage	L External Pump	M Power Supply
036-060	cm.	77.8	64.5	83.8	6.9	23.9	49.3	62.2	70.9	77.2	53.1	58.2	78.5
120	cm.	77.8	134.4	94	64.0	64.0	76.5	76.5	88.6	88.6	75.9	81.0	87.4

ClimateMaster works continually to improve its products. As a result, the design and specifications of each product at the time of order may be changed without notice and may not be as described herein. Please contact ClimateMaster's Customer Service Department at +1-405-745-6000 for specific information on the current design and specifications. Statements and other information contained herein are not express warranties and do not form the basis of any bargain between the parties, but are merely ClimateMaster's opinion or commendation of its products. The latest version of this document is available at **climatemaster.com.**

CLIMATEMASTER
Water-Source Heat Pump Systems

Dimensional Data - TMW170 & 340

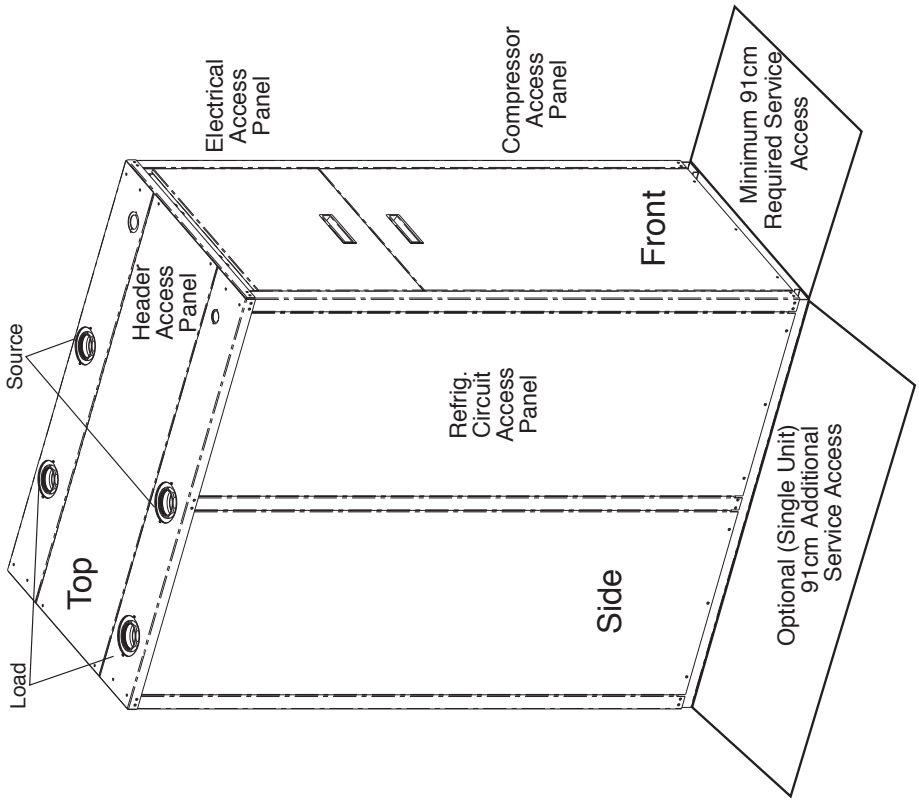

Notes: 1. Dimensions shown in centimeters unless noted otherwise
2. For multiple units placed side by side, allow 122cm minimum front access.
3. FPT - Female Pipe Thread

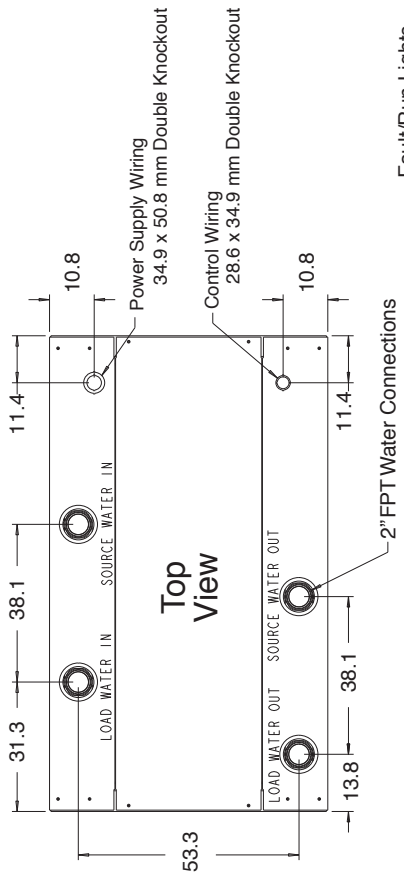

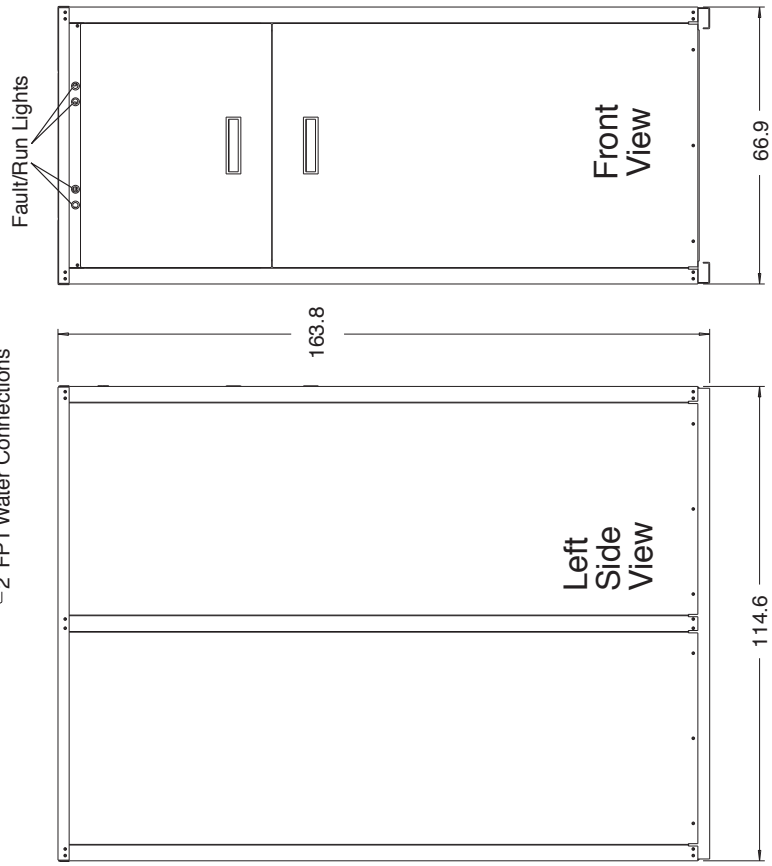

ClimateMaster works continually to improve its products. As a result, the design and specifications of each product at the time of order may be changed without notice and may not be as described herein. Please contact ClimateMaster's Customer Service Department at +1-405-745-6000 for specific information on the current design and specifications. Statements and other information contained herein are not express warranties and do not form the basis of any bargain between the parties, but are merely ClimateMaster's opinion or commendation of its products. The latest version of this document is available at **climatemaster.com.**

CLIMATEMASTER
Water-Source Heat Pump Systems

TMW Series Wiring Diagram Matrix

All current 50 Hz wire diagrams can be downloaded at www.climatemaster.com/commercial-50hz-wiring

Model	Wiring Diagram Part Number	Electrical V-HZ-PH	Control	DDC
TMW036	96B0144N01	220/240-50-1	CXM	-
	96B0144N03		DXM	-
TMW036-060	96B0223N05	380/420-50-3	CXM	MPC/LON
	96B0223N09		DXM	MPC/LON
TMW120	96B0225N04		CXM	MPC/LON
	96B0225N07		DXM	MPC/LON
TMW170	96B0226N02		CXM	-
	96B0226N04			LON
	96B0226N06			MPC
	96B0226N09		DXM	-
	96B0226N11			LON
	96B0226N13			MPC
TMW340	96B0227N02		CXM	-
	96B0227N04			LON
	96B0227N06			MPC
	96B0227N10		DXM	-
	96B0227N12			LON
	96B0227N14			MPC
AUX WD TMW036-060	96B0146N01		CXM/DXM	MPC
	96B0146N02			LON
TMW120	96B0146N05		-	MPC
	96B0146N06			LON

ClimateMaster works continually to improve its products. As a result, the design and specifications of each product at the time of order may be changed without notice and may not be as described herein. Please contact ClimateMaster's Customer Service Department at +1-405-745-6000 for specific information on the current design and specifications. Statements and other information contained herein are not express warranties and do not form the basis of any bargain between the parties, but are merely ClimateMaster's opinion or commendation of its products. The latest version of this document is available at **climatemaster.com.**

ClimateMaster
Water-Source Heat Pump Systems

Typical Wiring Diagram
Three Phase TMW036-060 Units - with CXM

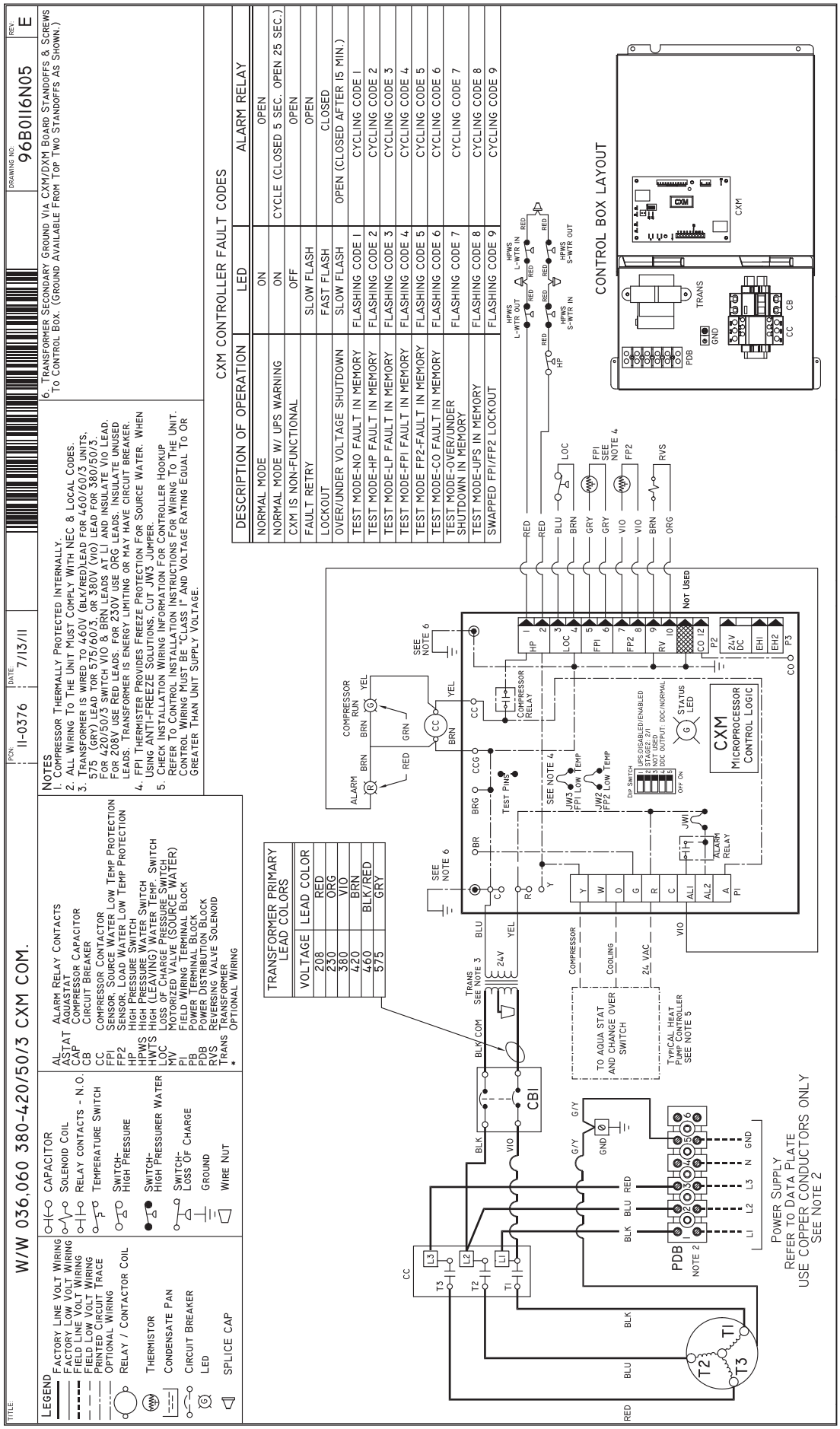

ClimateMaster works continually to improve its products. As a result, the design and specifications of each product at the time of order may be changed without notice and may not be as described herein. Please contact ClimateMaster's Customer Service Department at +1-405-745-6000 for specific information on the current design and specifications. Statements and other information contained herein are not express warranties and do not form the basis of any bargain between the parties, but are merely ClimateMaster's opinion or commendation of its products. The latest version of this document is available at **climatemaster.com.**

CLIMATEMASTER
Water-Source Heat Pump Systems

Typical Wiring Diagram
Three Phase TMW120 Units - with CXM

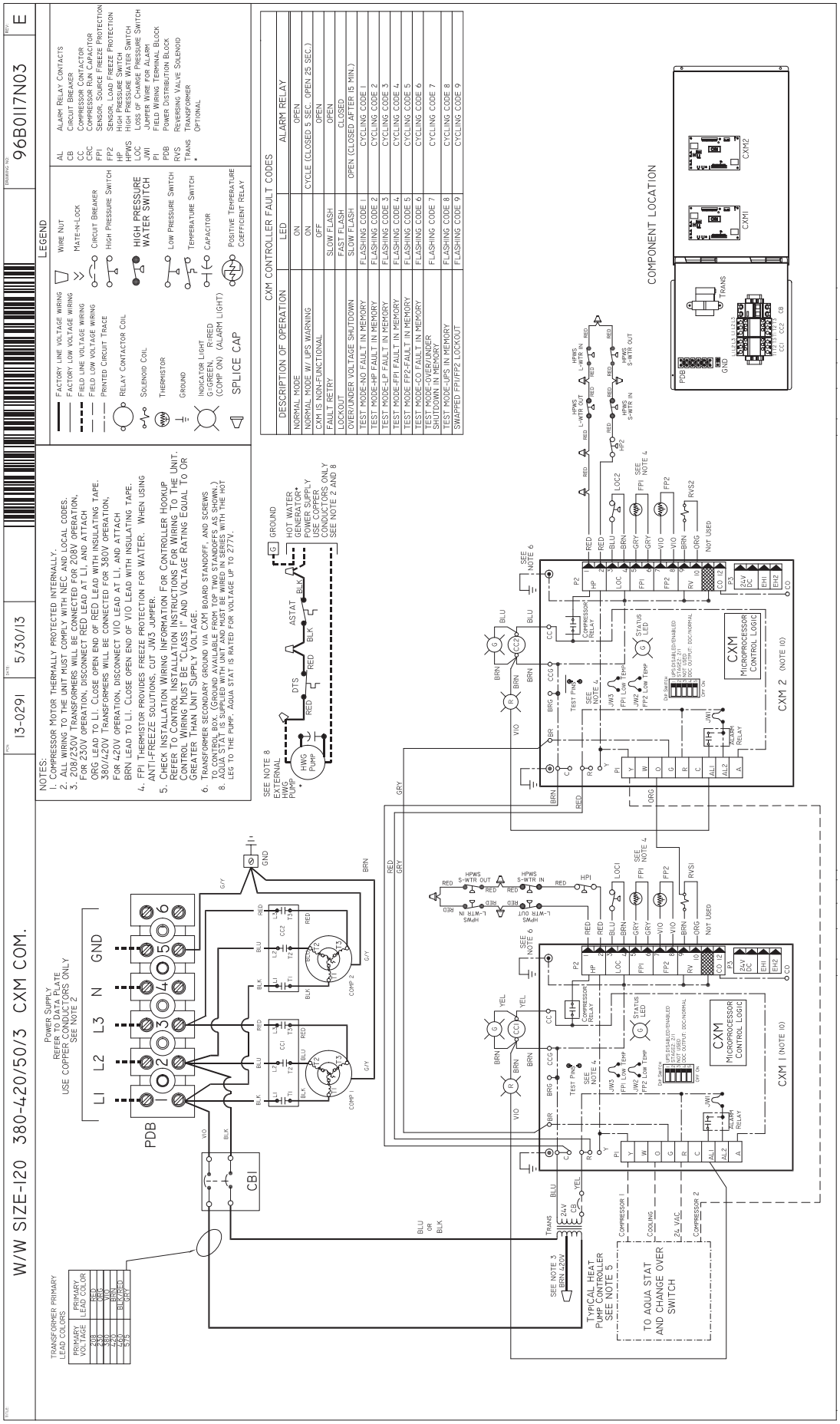

ClimateMaster works continually to improve its products. As a result, the design and specifications of each product at the time of order may be changed without notice and may not be as described herein. Please contact ClimateMaster's Customer Service Department at +1-405-745-6000 for specific information on the current design and specifications. Statements and other information contained herein are not express warranties and do not form the basis of any bargain between the parties, but are merely ClimateMaster's opinion or commendation of its products. The latest version of this document is available at **climatemaster.com.**

ClimateMaster
Water-Source Heat Pump Systems

Typical Wiring Diagram
Three Phase TMW 340 Units - with CXM

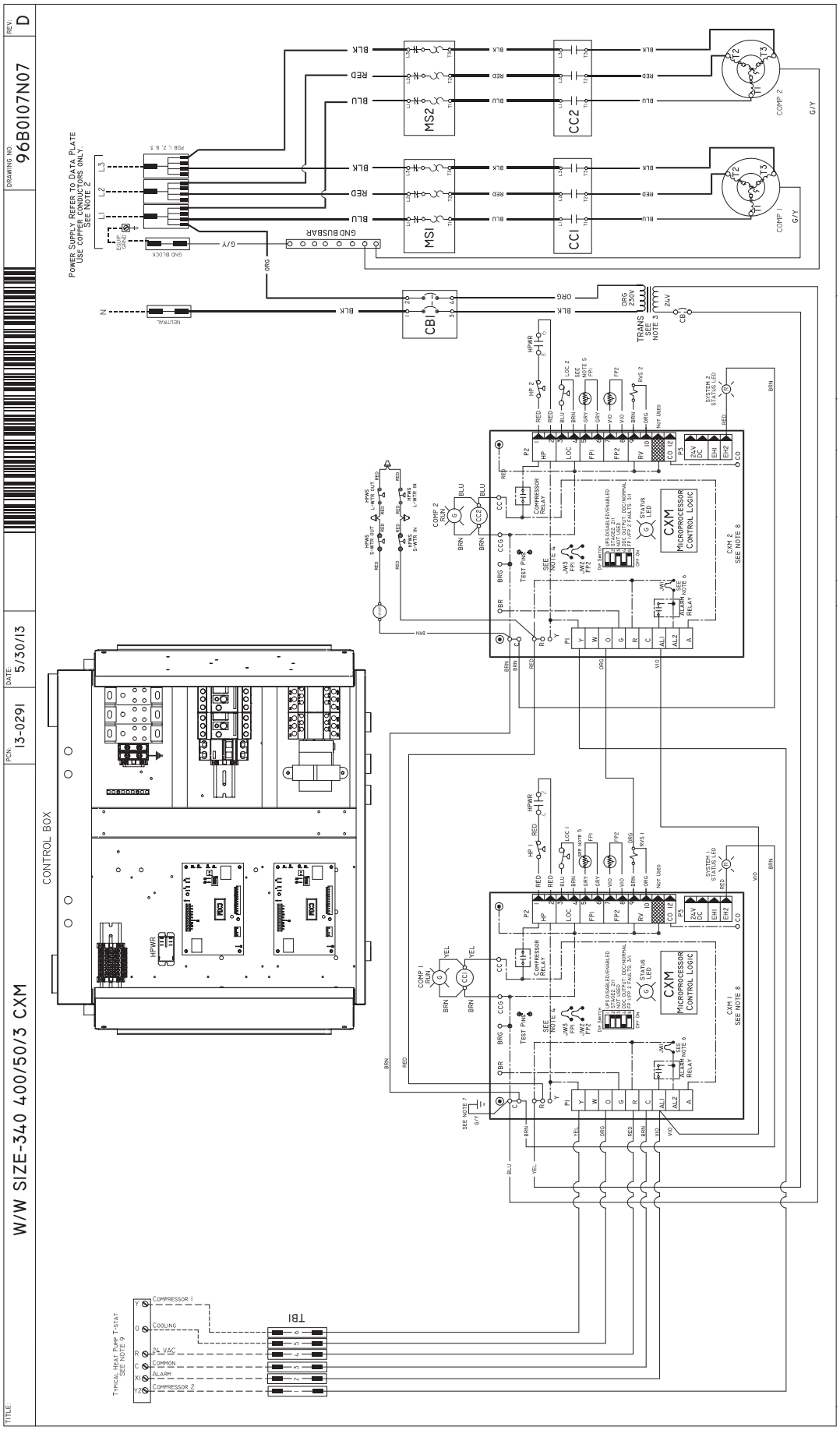

ClimateMaster works continually to improve its products. As a result, the design and specifications of each product at the time of order may be changed without notice and may not be as described herein. Please contact ClimateMaster's Customer Service Department at +1-405-745-6000 for specific information on the current design and specifications. Statements and other information contained herein are not express warranties and do not form the basis of any bargain between the parties, but are merely ClimateMaster's opinion or commendation of its products. The latest version of this document is available at **climatemaster.com.**

CLIMATEMASTER®
Water-Source Heat Pump Systems

Typical Wiring Diagram
Three Phase TMW 340 Units - with DXM

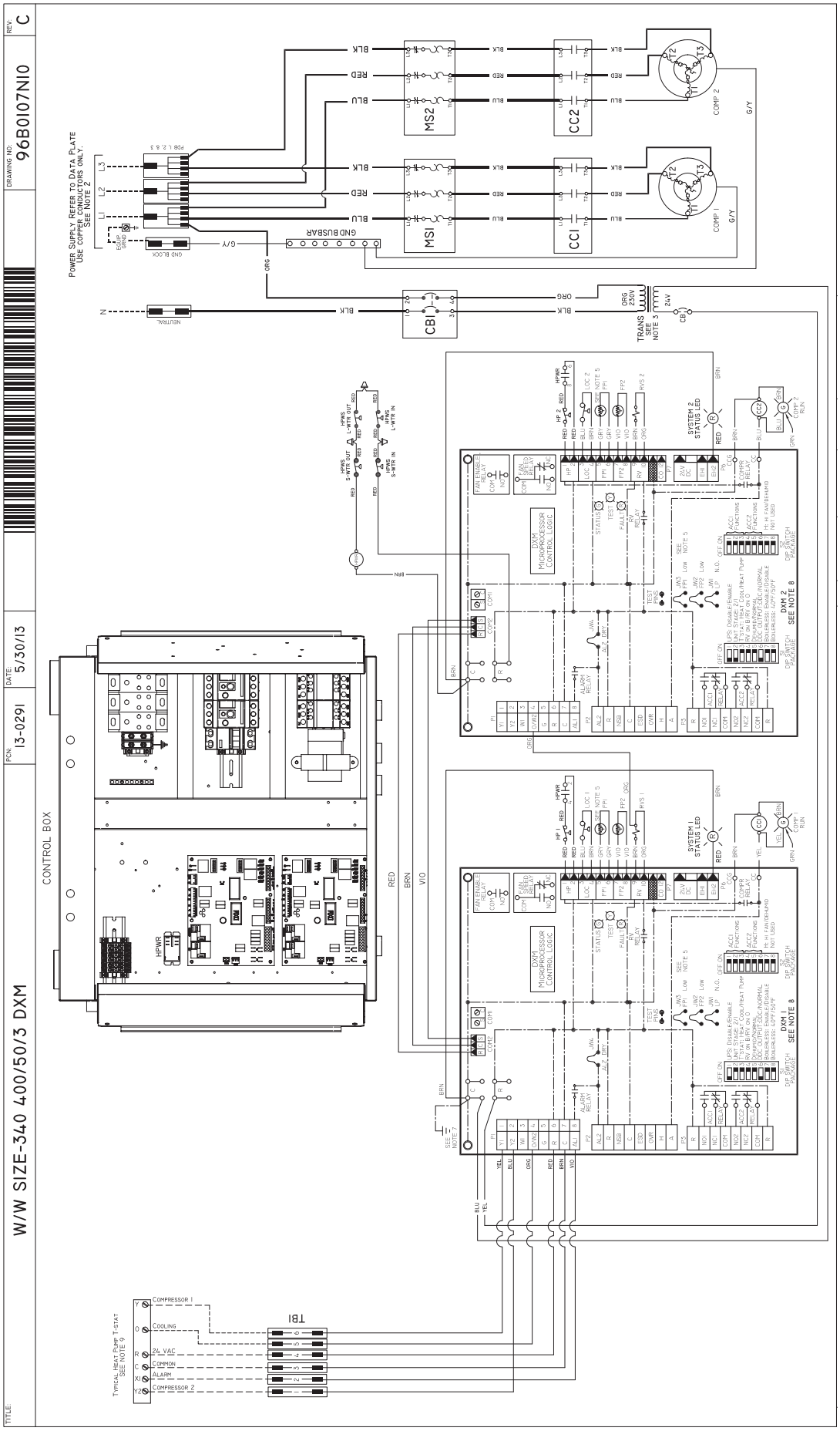

ClimateMaster works continually to improve its products. As a result, the design and specifications of each product at the time of order may be changed without notice and may not be as described herein. Please contact ClimateMaster's Customer Service Department at +1-405-745-6000 for specific information on the current design and specifications. Statements and other information contained herein are not express warranties and do not form the basis of any bargain between the parties, but are merely ClimateMaster's opinion or commendation of its products. The latest version of this document is available at **climatemaster.com.**

ClimateMaster
Water-Source Heat Pump Systems

Typical Wiring Diagram
Three Phase TMW 170 Units - with CXM

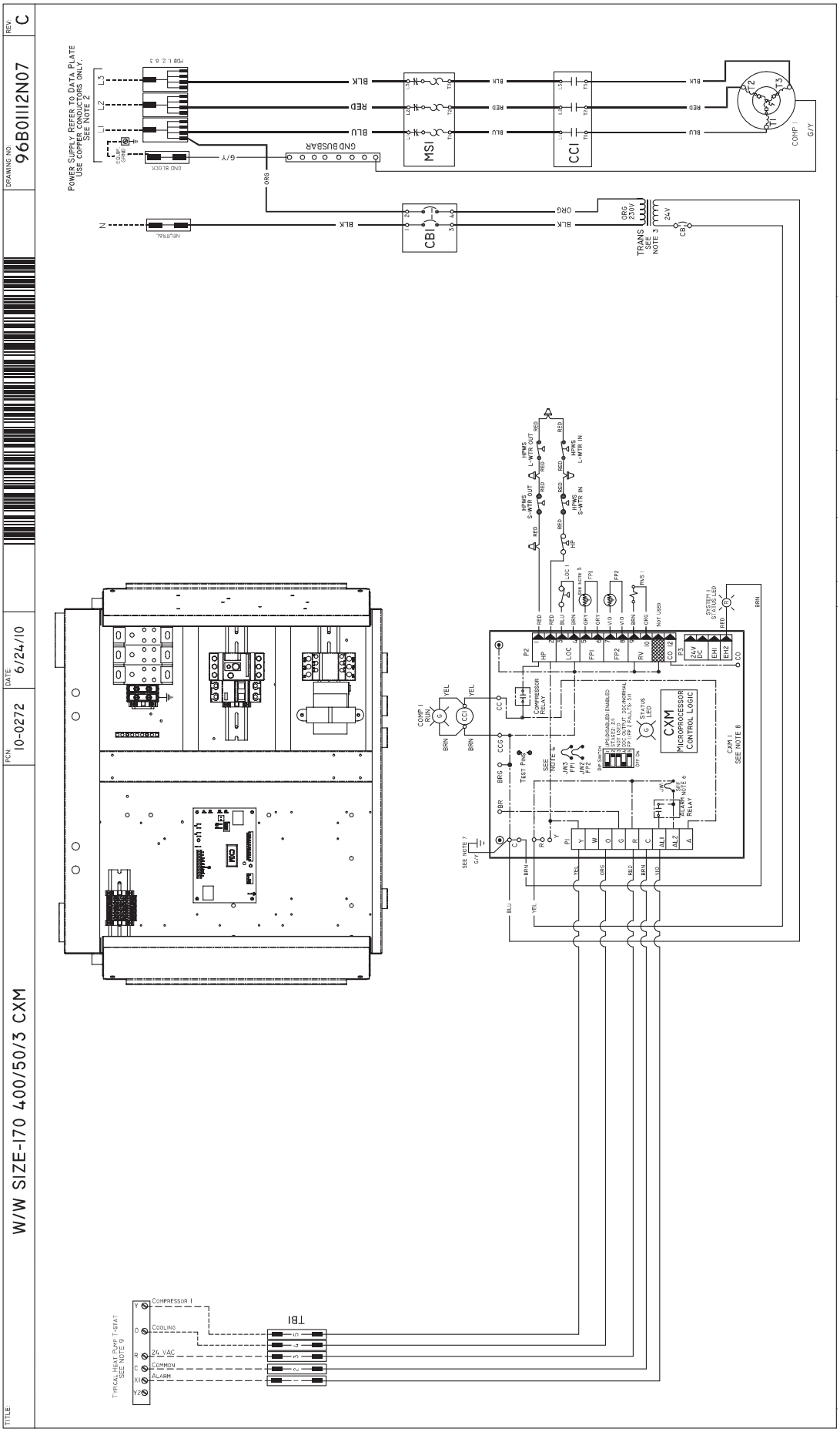

ClimateMaster works continually to improve its products. As a result, the design and specifications of each product at the time of order may be changed without notice and may not be as described herein. Please contact ClimateMaster's Customer Service Department at +1-405-745-6000 for specific information on the current design and specifications. Statements and other information contained herein are not express warranties and do not form the basis of any bargain between the parties, but are merely ClimateMaster's opinion or commendation of its products. The latest version of this document is available at **climatemaster.com.**

ClimateMaster
Water-Source Heat Pump Systems

Typical Wiring Diagram
Three Phase TMW 170 Units - with DXM

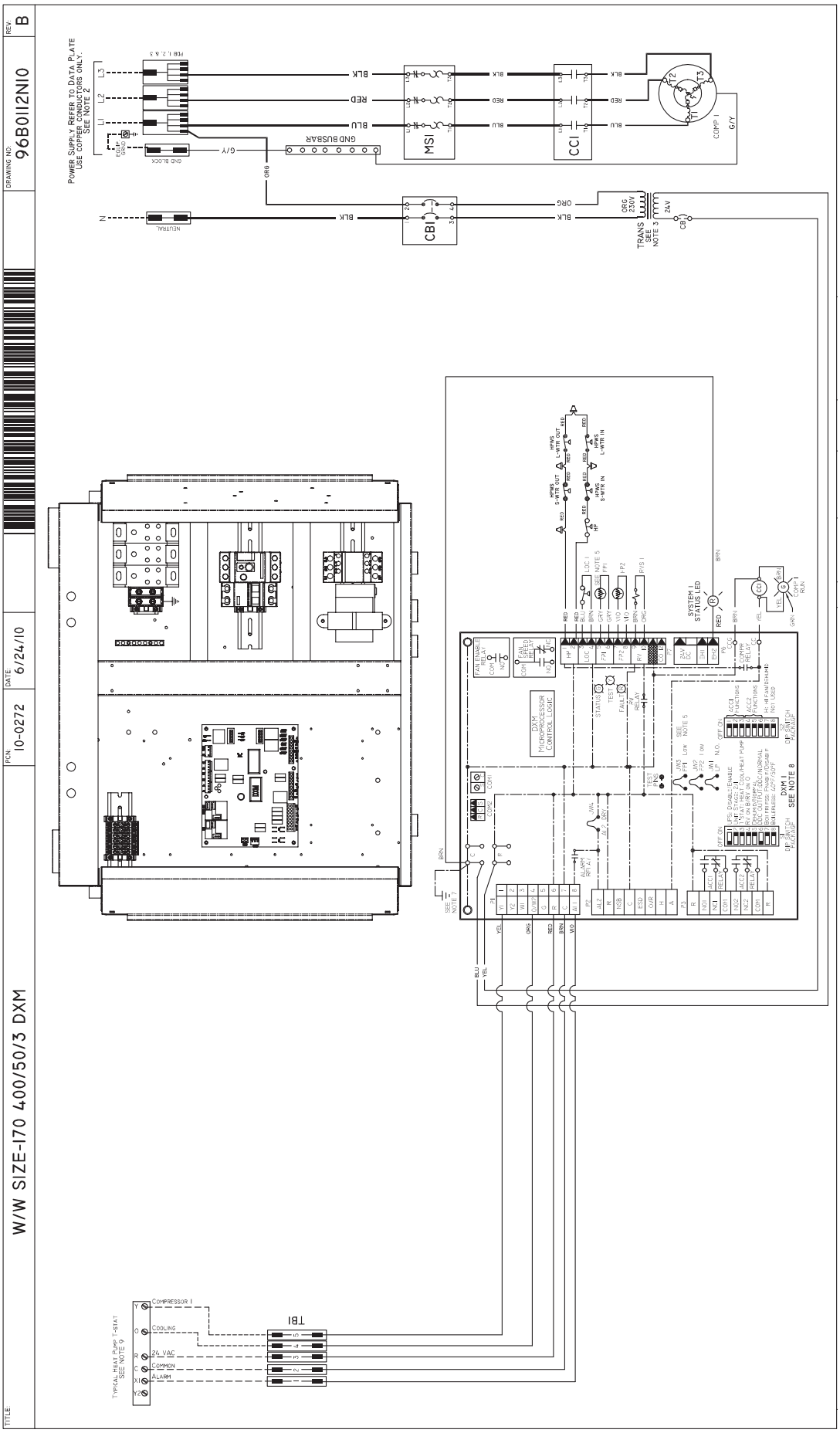

ClimateMaster works continually to improve its products. As a result, the design and specifications of each product at the time of order may be changed without notice and may not be as described herein. Please contact ClimateMaster's Customer Service Department at +1-405-745-6000 for specific information on the current design and specifications. Statements and other information contained herein are not express warranties and do not form the basis of any bargain between the parties, but are merely ClimateMaster's opinion or commendation of its products. The latest version of this document is available at **climatemaster.com.**

ClimateMaster
Water-Source Heat Pump Systems

Tranquility® Medium Water-to-Water (TMW) Series 50Hz
Engineering Specifications Page 1

General:
Furnish and install ClimateMaster "Tranquility®" Water Source Heat Pumps with EarthPure (HFC-410A) refrigerant, as indicated on the plans. Equipment shall be completely assembled, piped and internally wired. Capacities and characteristics as listed in the schedule and the specifications that follow.

Units shall be supplied completely factory built capable of operating over an entering water temperature range from -6.7° to 48.9°C as standard. Equivalent units from other manufacturers may be proposed provided approval to bid is given 10 days prior to bid closing. All equipment listed in this section must be rated in accordance with International Standards Organization (ISO) 13256-2.

All units shall be fully quality tested by factory run testing under normal operating conditions as described herein. Quality control system shall automatically perform via computer: triple leak check, pressure tests, evacuation and accurately charge system, perform detailed heating and cooling mode tests, and quality cross check all operational and test conditions to pass/fail criteria. Detailed report card will ship with each unit displaying status for critical tests and components. **Note: If unit fails on any cross check, it shall not be allowed to ship. Serial numbers will be recorded by factory and furnished to contractor on report card for ease of unit warranty status.**

Basic Construction:
All units must have multiple removable panels for service access. **Units having only one access panel shall not be acceptable.**

The heat pumps shall be fabricated from heavy gauge galvanized steel with powder coat paint finish. Both sides of the steel shall be painted for added protection. All interior surfaces shall be lined with 12.7mm thick, dual density, 28 kg/m3 acoustic type glass fiber insulation. Insulation placement shall be designed in a manner that will eliminate any exposed edges.

Standard cabinet panel insulation must meet NFPA 90A requirements, air erosion and mold growth limits of UL-181, stringent fungal resistance test per ASTM-C1071 and ASTM G21, and shall meet zero level bacteria growth per ASTM G22. **Unit insulation must meet these stringent requirements or unit(s) will not be accepted.**

Cabinets shall have separate holes and knockouts for entrance of line voltage and low voltage control wiring. All factory-installed wiring passing through factory knockouts and openings shall be protected from sheet metal edges at openings by plastic ferrules. Supply and return water connections shall be copper FPT fittings. **Contractor shall be responsible for any extra costs involved in the installation of units that do not have this feature.** Contractor must ensure that units can be easily removed for servicing and coordinate locations of electrical conduit and lights with the electrical contractor.

Unit(s) shall have exterior indicator lights showing, 1) compressor operation (on/off) and 2) unit "fault" status. Contractor shall be responsible for providing control circuitry and indicator lights for units not providing this feature.

Option: UltraQuiet package - Size 036, 060, 120 include sound attenuating insulation on unit base pan and all removable panels plus a refrigerant line muffler. Size 170 and 340 have a sound blanket on each compressor.

Option: The unit will be supplied with cupro nickel coaxial water to refrigerant heat exchanger (specify source and/or load heat exchanger).

Refrigerant Circuit:
Units shall have sealed, isolated refrigerant circuit(s), each including a high efficiency scroll compressor designed for heat pump operation, a thermostatic expansion valve for refrigerant metering, a reversing valve, load and source coaxial (tube in tube) refrigerant to water heat exchangers, and safety controls including a high pressure switch, low pressure switch (loss of charge), and low water temperature sensors. Access fittings shall be factory installed on high and low pressure refrigerant lines to facilitate field service. Activation of any safety device shall prevent compressor operation via a microprocessor lockout circuit. **Units with brazed plate heat exchangers will not be accepted.**

Unit shall be supplied with extended range insulation, which adds closed cell insulation to internal water lines, and provides insulation on suction side refrigeration tubing including refrigerant to water heat exchangers.

Hermetic compressors shall be internally sprung. The compressors shall have a dual level vibration isolation system. The compressors will be mounted on rubber grommets to a large heavy gauge compressor mounting plate, which is then isolated

ClimateMaster works continually to improve its products. As a result, the design and specifications of each product at the time of order may be changed without notice and may not be as described herein. Please contact ClimateMaster's Customer Service Department at +1-405-745-6000 for specific information on the current design and specifications. Statements and other information contained herein are not express warranties and do not form the basis of any bargain between the parties, but are merely ClimateMaster's opinion or commendation of its products. The latest version of this document is available at **climatemaster.com.**

from the cabinet base with rubber grommets for maximized vibration attenuation. Compressors shall have thermal overload protection.

Refrigerant to water heat exchangers shall be of copper inner water tube and steel refrigerant outer tube design, rated to withstand 4306 kPa working refrigerant pressure and 3101 kPa working water pressure.The refrigerant to water heat exchanger shall be "electro-coated" with a low cure cathodic epoxy material a minimum of 0.4 mils thick (0.4 – 1.5 mils range) on all surfaces. The black colored coating shall provide a minimum of 1000 hours salt spray protection per ASTM B117-97 on all external steel and copper tubing. The material shall be formulated without the inclusion of any heavy metals and shall exhibit a pencil hardness of 2H (ASTM D3363-92A), crosshatch adhesion of 4B-5B (ASTM D3359-95), and impact resistance of 160 in-lbs (184 kg-cm) direct (ASTM D2794-93). **For all models except 170 & 340, which are powder coated.**

Refrigerant metering shall be accomplished by thermostatic expansion valve only. Expansion valves shall be dual port balanced types with external equalizer for optimum refrigerant metering. Units shall be designed and tested for operating ranges of entering water temperatures from -5° to 45°C (40° for size 170/340). Reversing valve shall be four-way solenoid activated refrigerant valve, which shall default to heating mode should the solenoid fail to function.

Electrical:
A control box shall be located within the unit compressor compartment and shall contain a75VA control transformer with load side short circuit and overload protection via a built in circuit breaker, 24 volt activated compressor contactor, terminal block for thermostat wiring and solid-state controller for complete unit operation. Reversing valve wiring shall be routed through this electronic controller. Units shall be name-plated for use with time delay fuses or HACR circuit breakers. Unit controls shall be 24 Volt and provide heating or cooling as required by the remote aquastat / sensor. Two compressor units shall have a solid-state time delay relay and random start to prevent both compressors from starting simultaneously.

Solid State Control System (CXM):
Units shall have a solid-state control system. **Units utilizing electro-mechanical control shall not be acceptable.** The control system microprocessor board shall be specifically designed to protect against building electrical system noise contamination, EMI, and RFI interference. The control system shall have the following features:

a. Anti-short cycle time delay on compressor operation.
b. Random start on power up mode.
c. Low voltage protection.
d. High voltage protection.
e. Unit shutdown on high or low refrigerant pressures.
f. Unit shutdown on low water temperature.
g. Automatic intelligent reset. Unit shall automatically reset the unit 5 minutes after trip if the fault has cleared. If a fault occurs 3 times sequentially without thermostat meeting temperature, then lockout requiring manual reset will occur.
h. Ability to defeat time delays for servicing.
i. Light emitting diode (LED) on circuit board to indicate high pressure, low pressure, low voltage, high voltage, low water temperature, and control voltage status.
j. The low-pressure switch shall not be monitored for the first 120 seconds after a compressor start command to prevent nuisance safety trips.
k. 24V output to cycle a motorized water valve or other device with compressor contactor.
l. Unit Performance Sentinel (UPS). The UPS warns when the heat pump is running inefficiently.
m. Source water coil low temperature sensing (selectable for water or anti-freeze).
n. Load water coil low temperature sensing.

NOTE: Units not providing the 7 safety protections of anti-short cycle, low voltage, high voltage, high refrigerant pressure, low pressure (loss of charge), source water coil low water temperature sensing and load water coil low water temperature sensing will not be accepted.

Option: Enhanced solid state control system (DXM)
Control shall have all of the above mentioned features of the CXM control system along with the following expanded features:

a. Removable low voltage control connector.
b. Minimized reversing valve operation (Unit control logic shall only switch the reversing valve when cooling is demanded for the first time. The reversing valve shall be held in this position until the first call for heating, ensuring quiet operation and increased valve life.).
c. Ability to work with heat pump or heat/cool (Y, W) type controls.
d. Ability to work with controls using O or B reversing valve control.
e. Emergency shutdown contacts.
f. Configurable accessory relay.
g. Relay to start system pump.

Option: Lonworks interface system
Units shall have all the features listed above (either CXM or DXM) and the control board will be supplied with a LONWORKS

ClimateMaster works continually to improve its products. As a result, the design and specifications of each product at the time of order may be changed without notice and may not be as described herein. Please contact ClimateMaster's Customer Service Department at +1-405-745-6000 for specific information on the current design and specifications. Statements and other information contained herein are not express warranties and do not form the basis of any bargain between the parties, but are merely ClimateMaster's opinion or commendation of its products. The latest version of this document is available at **climatemaster.com.**

interface board, which is LONMark certified. This will permit all units to be daisy chained via a 2-wire twisted pair shielded cable. The following points must be available at a central or remote computer location:

a. Source leaving water temperature
b. Load leaving water temperature
c. Command of temperature setpoint
d. Cooling status
e. Heating status
f. Low temperature sensor alarm
g. Low pressure sensor alarm
h. High pressure switch alarm
i. Hi/low voltage alarm
j. Unoccupied / occupied command
k. Cooling command
l. Heating command
m. Fault reset command
n. Itemized fault code revealing reason for specific shutdown fault (any one of 7)

Option: MPC (Multiple Protocol Control) interface system
Units shall have all the features listed above (either CXM or DXM) and the control board will be supplied with a Multiple Protocol interface board. Available protocols are BACnet MS/TP, Modbus, or Johnson Controls N2. The choice of protocol shall be field selectable/changeable via the use of a simple selector switch. Protocol selection shall not require any additional programming or special external hardware or software tools. This will permit all units to be daisy chain connected by a 2-wire twisted pair shielded cable. The following points must be available at a central or remote computer location:

a. Source leaving water temperature
b. Load leaving water temperature
c. Command of temperature setpoint
d. Cooling status
e. Heating status
f. Low temperature sensor alarm
g. Low pressure sensor alarm
h. High pressure switch alarm
i. Hi/low voltage alarm
j. Unoccupied / occupied command
k. Cooling command
l. Heating command
m. Fault reset command
n. Itemized fault code revealing reason for specific shutdown fault (any one of 7)

Warranty:
Climate Master shall warranty equipment for a period of 12 months from start up or 18 months from shipment (whichever occurs first).
Option: Two-Year Extended Warranty provides coverage for a period of 24 months from date of start-up or 30 months from the date of shipment (whichever occurs first).

Option: Extended 4-year compressor warranty covers compressor for a total of 5 years.

FIELD INSTALLED OPTIONS

Hose Kits:
All units shall be connected with hoses. The hoses shall be 61cm long, braided stainless steel; fire rated hoses complete with adapters. Only fire rated hoses will be accepted.

Valves:
The following valves are available and will be shipped loose:

ClimateMaster works continually to improve its products. As a result, the design and specifications of each product at the time of order may be changed without notice and may not be as described herein. Please contact ClimateMaster's Customer Service Department at +1-405-745-6000 for specific information on the current design and specifications. Statements and other information contained herein are not express warranties and do not form the basis of any bargain between the parties, but are merely ClimateMaster's opinion or commendation of its products. The latest version of this document is available at **climatemaster.com.**

a. Ball valve; bronze material, standard port full flow design, FPT connections.
b. Ball valve with memory stop and PT port.
c. "Y" strainer with blowdown valve; bronze material, FPT connections.
d. Motorized water valve; slow acting, 24v, FPT connections.

Hose Kit Assemblies:
The following assemblies ship with the valves already assembled to the hose described:
a. Supply and return hoses having ball valve with PT port.
b. Supply hose having ball valve with PT port; return hose having automatic flow regulator valve with PT ports, and ball valve.
c. Supply hose having "Y" strainer with blowdown valve, and ball valve with PT port; return hose having automatic flow regulator with PT ports, and ball valve.
d. Supply hose having "Y" strainer with blowdown valve, and ball valve with PT port; return hose having ball valve with PT port.

ClimateMaster works continually to improve its products. As a result, the design and specifications of each product at the time of order may be changed without notice and may not be as described herein. Please contact ClimateMaster's Customer Service Department at +1-405-745-6000 for specific information on the current design and specifications. Statements and other information contained herein are not express warranties and do not form the basis of any bargain between the parties, but are merely ClimateMaster's opinion or commendation of its products. The latest version of this document is available at **climatemaster.com.**

CLIMATEMASTER
Water-Source Heat Pump Systems

Revision History

Date:	Item:	Action:
10/16/15	Wiring Diagram Matrix	Updated
08/13/15	Decoder Wiring Diagrams Engineering Specifications	Removed CE Text
07/24/15	Wiring Diagram Matrix	Updated
01/06/12	Engineering Specifications	Removed references to air flow, air temperature
08/09/11	Unit Maximum Working Water Pressure	Updated to Reflect New Safeties
04/28/11	TMW060 Heating Performance Data Table	Updated
11/30/10	Electrical Data Table	Updated
09/28/10	Engineering Specifications	Updated
09/01/10	036-340 Performance Data	Updated
08/04/10	ALL	Removed I-P units, Updated Engineering Specs.
09/02/09	036-120 50 Hz	Added
04/08/09	Submittal Split Into 60Hz Submittal and 50Hz Submittal	
02/11/09	All	036-120 60 Hz Sizes Added
09/04/08	Max Working Water Pressure	Added
07/22/08	Engineering Specifications	Updated Verbiage
07/22/08	050 (170) Information	Added
04/20/07	Table of Contents	Added Table of Contents
04/20/07	Specifications	Updated Specifications for new Safety Agency
02/08/07	Specifications	Updated
09/22/06	Heating Data (I-P & S-I)	Removed Lower Flow Rates on 20°F & -5°C Entering Water Temperatures
09/10/06	First Published	

ClimateMaster works continually to improve its products. As a result, the design and specifications of each product at the time of order may be changed without notice and may not be as described herein. Please contact ClimateMaster's Customer Service Department at +1-405-745-6000 for specific information on the current design and specifications. Statements and other information contained herein are not express warranties and do not form the basis of any bargain between the parties, but are merely ClimateMaster's opinion or commendation of its products. The latest version of this document is available at **climatemaster.com.**