Sound Performance Guide

LC264

Rev.: November 11, 2021

CLIMATEMASTER®

TABLE OF CONTENTS

Sound Explained 4
Acoustical Performance – 60 Hz Products
TSM/TSL Series – Standard and w/UltraQuiet Construction 8
TRL Series 10
TRL Series w/UltraQuiet Construction 11
TE Series 12
TE Series w/UltraQuiet Construction 13
TS Series 14
TS Series w/UltraQuiet Construction 16
TZ Series 18
TZ Series w/UltraQuiet Construction 19
TY Series 20
TY Series w/UltraQuiet Construction 21
TR Series 22
TR Series w/UltraQuiet Construction 24
TC Series 26
TC Series w/UltraQuiet Construction 28
TC_L Series 30
TC_L Series w/UltraQuiet Construction 31
TLV Series 32
TLV Series w/UltraQuiet Construction 33
TRC Series 34
TRC Series w/UltraQuiet Construction 35
TMW Series 36
Acoustical Performance – 50 Hz Products
TS Series w/UltraQuiet Construction 37
TC Series 39
TC Series w/UltraQuiet Construction 41
TC_L Series 43
TC_L Series w/UltraQuiet Construction 44
TLV Series 45
TLV Series w/UltraQuiet Construction 46
TRC Series – Standard and w/UltraQuiet Construction 47
Revision Log 51

SOUND EXPLAINED

WHAT IS NOISE?

What is Noise? Sound becomes noise when it is unwanted, unpleasant, uncontrolled or simply too loud. The human response to noise is naturally at best unpredictable, however research has developed a basic criteria using level and spectrum shape.

Before proceeding it is necessary to define a few basic terms. More detailed terms and definitions can be found in ASHRAE Fundamentals Chapter 7.

Frequency or Hz - number of oscillations (or cycles) per unit time frame completed by a vibrating object. The international unit for frequency is cycles per second (or Hertz or Hz)

Frequency Spectrum - Frequency spectrum is the audible range of frequencies. For instance audible human hearing is defined as the 20-20kHz range for complete music or often is shortened for a more practical range of 50-5kHz in noise measurements.

Figure 1 - Frequency Spectrum

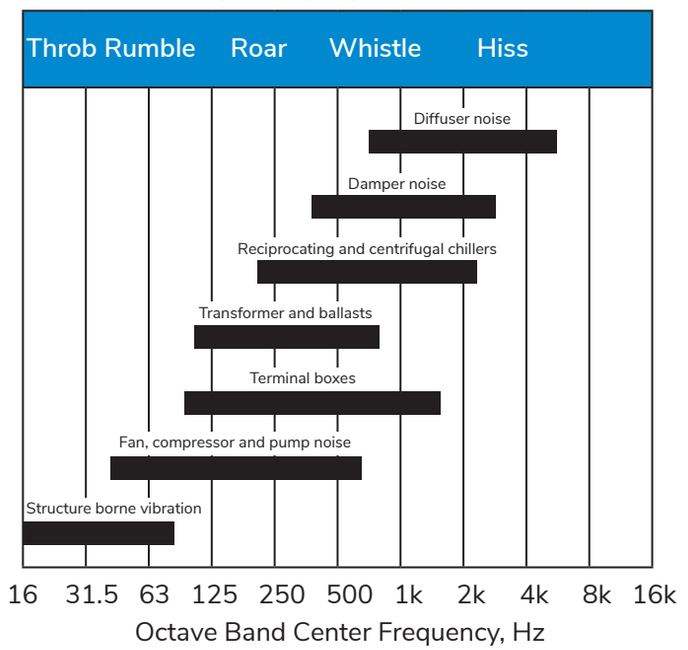

dB - The decibel is the accepted unit of measure for comparing power or pressure ratios. It can be confusing since it is describing a ratio of several different phenomena. Numerically, the dB is 10 times the base 10 logarithm of the ratio of any two like quantities. Differences of 3-5 dB in sound power are barely perceptable. An increase of 10 dB is percieved as twice as loud.

1/3 Octave or Octave band - The Octave band is a frequency band having an upper band limit twice the lower band limit. The octave can further be subdivided into 3 equal parts. Figure 1 shows full octave center frequencies.

WHAT IS SOUND POWER (LW)?

Sound power (LW) represents the energy radiated from the source. The energy is radiated directly from the source and the ambient acoustic conditions are not taken into account. This is an absolute number. Sound power is often referenced by building designers because it is a certifiable quantity. It is often used in conjunction with standard building materials to predict sound pressure levels in a newly designed building environment. In essence if sound power can be measured, then the sound pressure performance can be predicted for any known building interior using common engineering techniques. The most common measurement of sound power is typically accomplished in one of two ways: The Free-Field method or the Reverberant Field Method.

In the Free field method a unit is placed in a reverberation free 'Free Field' room (anechoic chamber) and the sound pressure level is measured using 1/3 or full octave band segments at various documented distances from the source. This SPL measurement can be numerically corrected (for distance from the source) to render a pure sound power level of the source. This sound measurement is the 'purest' since it does not include any assumptions for room size or furnishings. The measurement is made difficult due to the expense of creating a true Free-Field environment. For example to achieve acoustic damping at 70 Hz the 'trap' must be 4 feet in length!

Typical Sound Pressure Levels

Sound Source	Sound Pressure Level (dB re 20 uPa)	Subjective Reaction
Military jet takeoff at 100 ft	140	Extreme Danger
Artillery fire at 10 ft 130	130	
Passenger jet takeoff at 100 ft	120	Threshold of pain
Loud rock concert	110	Threshold of comfort
Subway Station platform	100	
Unmuffled large diesel engine	90	Very loud
Computer printer room	80	
Freight train at 100 ft	70	
Conversational speech at 3 ft	60	
Window air conditioner	50	Moderate
Quiet residential area	40	
Whispered conversation	30	
Buzzing insect at 3 ft	20	
Threshold of hearing	10	Faint
Threshold of youthful hearing	0	Threshold of hearing

SOUND EXPLAINED

In the more common reverberant field method the sound source is located in a known reverberant room utilizing reflective floors, ceilings, and walls. Sound pressure levels are then recorded at a measured distance both from the source and the reverberant walls, ceilings and floors. Then this SPL measurement can be numerically corrected (for distance from the source, and surface reverberation characteristics) to render a pure sound power level of the source equipment. This method is the easiest test to perform since a reverberant room is easier to construct.

WHAT IS SOUND PRESSURE (LP)?

Sound Pressure (LP) represents the sound as it approaches a listener and is greatly dependent upon room volume, furnishings and surface treatment. The designer is often asked to convert Sound Power to predict Sound Pressure as it effects the occupant of the room. Sound pressure levels are useful when trying to predict the 'real' effects of the environment by the operating equipment.

Sound pressure can be easily measured in a representative room using simple equipment or the sound pressure levels can be predicted for any room by using the sound power level and correcting for room volume and surface furnishings of the room.

The two major single number criteria used for assessment of wshp systems are: the A weighted sound level (dBA), and noise criterion (NC) curves.

Sound Power Vs Sound Pressure

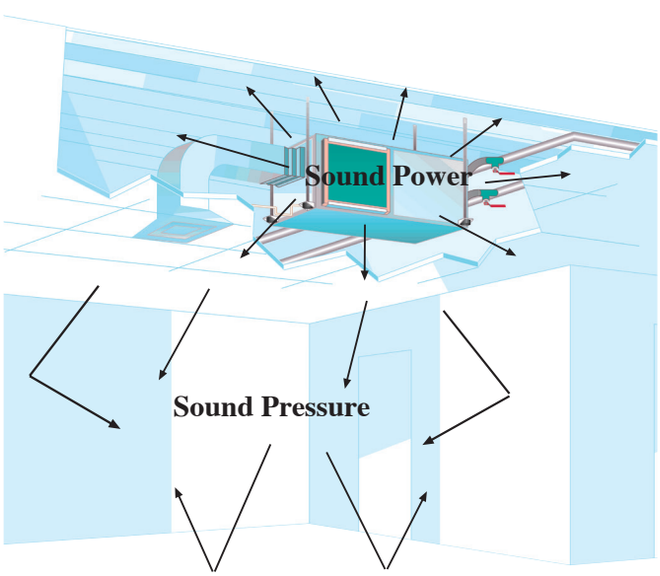

A-WEIGHTED SOUND LEVEL

The A-Weighted sound pressure level (LA) is used when a single number is desired to state the design noise goal in an occupational environment. This weighting scale is most often used with the measurement of noise in an occupational environment and is most sensitive to 700-4000 Hz range. The measurement method is simple. A single measurement is made on a handheld instrument and the A-weighting is typically a selection on the instrument. (dBA). This measurement is best to compare sources with similar sound spectrums. The A-weighting is most often used when measuring the occupational hazard for continuous exposure to high SPL's.

C-WEIGHTED SOUND LEVEL

The C-Weighted sound pressure level (LA) is used when a single number is desired to state the design goal. This weighting scale is most often used with the measurement of wide spectrum (i.e. music) in occupational environment and is sensitive to the wide 50-5000 Hz range. The extended lower frequency range is important with the measurement of rumble and its impact on the measurement method is simple. A single measurement is made on a handheld instrument and the C-weighting is typically a selection on the instrument. (dBC). The C-weighting is most often used when measuring non-hazardous noise in occupational and recreational environments such as offices or music concerts where the sound source is more full spectrum.

NOISE CRITERION (NC) CURVES

Since as humans we hear through our own instruments, our ears, it is necessary to include the coloration of the sound spectrum to which our human ears are sensitive. Human hearing is most sensitive at around 1000Hz. By including these effects on human hearing sensitivity the NC curves attempt to provide a smooth curve of response by allowing increased levels of lower frequencies versus higher frequencies.

These curves define the limits of the octave noise band spectrum (63 – 8000 Hz) of a noise source that must not be exceeded in order to achieve a level of occupant acceptance. For example private offices are often designed with an NC-35 design goal. The background noise level meets this criterion as long as no portion of its spectrum lies above the designated NC-35 line. Architectural environments are often designed with NC requirements for each major use area.

SOUND EXPLAINED

AHRI 260 SOUND STANDARD

AHRI 260 Sound Rating of Ducted Air Moving and Conditioning Equipment was established in 2000. The standard helps provide guidance to the industry, including manufactures, acousticians, engineers, architects, contractors, and building owners. The standard includes water source heat pumps and outlines test procedures for 5 applications:

- Ducted discharge tests
- Ducted inlet tests
- Free inlet (or discharge) combined with case radiated tests
- Case radiated tests
- Free inlet or free discharge

Free inlet and case radiated

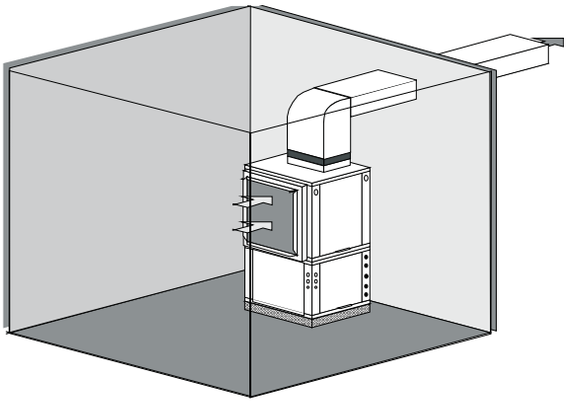

Ducted Discharge

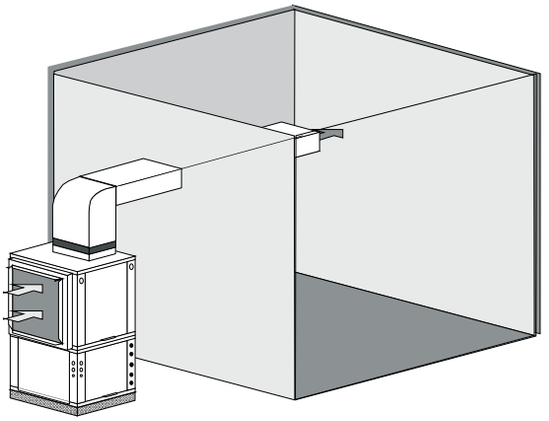

Casing Radiated

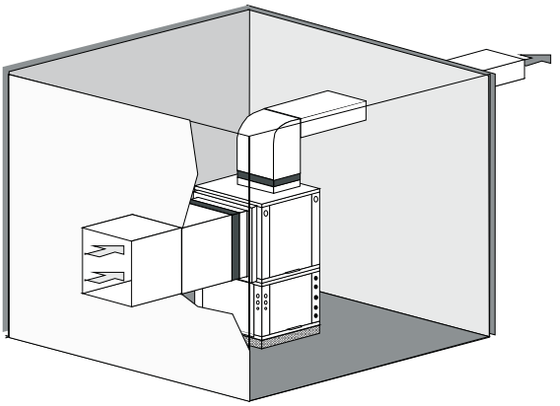

Ducted Inlet

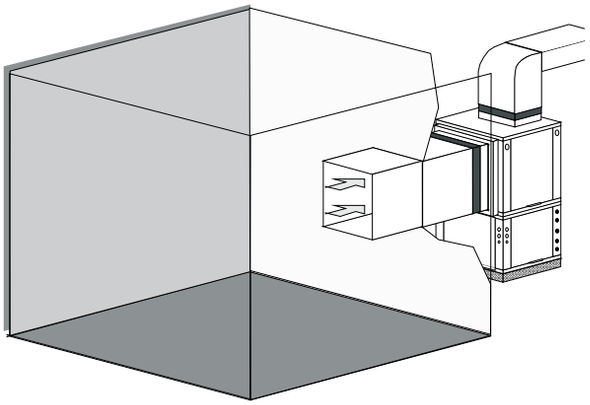

Free Inlet

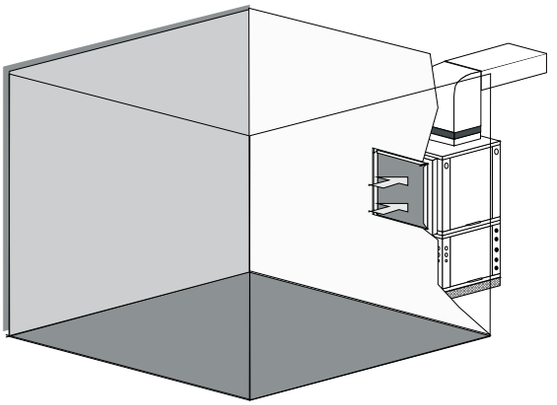

SOUND EXPLAINED

If data from two manufacturers is compared using different test procedures, results are not comparable. ClimateMaster has tested its product line for both ducted discharge and the free inlet air combined with case radiated tests. These tests, it is felt are most representative of the applications typically found in the field. Within each of these two applications, a representative model of each cabinet size was tested with low and high-speed fan in the cooling, heating and fan only modes. Related models sound performance may then be predicted using guidelines set forth in AHRI 260.

Equally critical to evaluating proper application data, is the assurance that the sound data presented is credible. ClimateMaster tests its product lines using a third party ITS (Intertec Testing Services) in New York, a partner with ETL. This is the company ARI has chosen to verify industry standards of unit performance. At ITS, in their AMCA-300 rated test labs, reverberated sound tests were carried out and a mapping of sound performance documented on ClimateMaster units.

Once the sound power data has been presented in an octave band form it can be used to mathematically predict sound performance in a known environment using standard engineering practices.

AHRI 350 SOUND STANDARD

AHRI 350 Sound Performance Rating of Non-ducted Indoor Air-Conditioning and Heat Pump Equipment. Like AHRI 260 the standard helps provide guidance to the industry, including manufactures, acousticians, engineers, architects, contractors, and building owners. However, AHRI 350 was specifically created for vertical stack types of products commonly found high rise residential and lodging buildings. Like AHRI 260, AHRI 350 is similar in that fact that it is a sound power rating standard and can be used to estimate sound pressure levels in the room but is different in that the data is tested in a semi-installed environment with a sheet rock in-closer which represents how the products are designed to be applied.

SOUND PERFORMANCE COMPARISONS

It is important to remember that comparisons should only be made with equivalent data. Comparing sound performance data tested to AHRI 260 with sound performance data tested to AHRI 350 is not permissible. Comparisons with data not listed as conforming with AHRI 260 or 350 respectively should not be performed.

TSM/TSL Series (60 Hz) – Standard and w/UltraQuiet Technology

Tested in accordance with AHRI 350

Octave Band Sound Power Level, (dB re 1pW)

Model	Mode	Free Inlet & Case Radiated							Free Inlet & Case Radiated w/UltraQuiet Technology						
		Octave Band Frequency, Hz							Octave Band Frequency, Hz						
		125	250	500	1000	2000	4000	8000	125	250	500	1000	2000	4000	8000
TSM/L09	Fan Only: Low Speed	53	45	46	37	30	30	34	53	45	46	37	30	30	34
	Fan Only: Med Speed	55	49	49	41	35	34	35	55	49	49	41	35	34	35
	Fan Only: High Speed	57	52	52	45	40	38	38	57	52	52	45	40	38	38
	Cooling: Low Speed	55	48	46	38	31	30	34	53	46	44	37	31	30	34
	Cooling: Med Speed	57	50	48	42	35	33	35	55	48	46	41	35	33	35
	Cooling: High Speed	58	53	51	45	40	38	37	56	51	49	44	40	38	37
	Heating: Low Speed	57	49	47	40	34	31	34	55	47	45	39	34	31	34
	Heating: Med Speed	59	51	50	43	38	34	34	57	49	48	42	38	34	34
	Heating: High Speed	59	53	52	46	41	38	37	57	51	50	45	41	38	37
TSM/L12	Fan Only: Low Speed	53	45	46	37	31	30	34	53	45	46	37	31	30	34
	Fan Only: Med Speed	55	49	49	42	36	34	35	55	49	49	42	36	34	35
	Fan Only: High Speed	57	52	52	45	40	38	37	57	52	52	45	40	38	37
	Cooling: Low Speed	56	45	45	38	29	30	34	54	43	43	37	29	30	34
	Cooling: Med Speed	57	49	48	41	35	33	35	55	47	46	40	35	33	35
	Cooling: High Speed	58	51	51	45	40	37	37	56	49	49	44	40	37	37
	Heating: Low Speed	60	48	48	42	33	31	34	58	46	46	41	33	31	34
	Heating: Med Speed	59	50	50	44	37	33	34	57	48	48	43	37	33	34
	Heating: High Speed	59	52	52	46	40	37	36	57	50	50	45	40	37	36
TSM/L15	Fan Only: Low Speed	60	57	55	48	45	46	40	60	57	55	48	45	46	40
	Fan Only: Med Speed	61	58	57	50	47	48	42	61	58	57	50	47	48	42
	Fan Only: High Speed	63	60	58	52	49	49	44	63	60	58	52	49	49	44
	Cooling: Low Speed	60	57	55	49	45	46	40	58	55	53	48	45	46	40
	Cooling: Med Speed	62	59	57	50	46	47	42	60	57	55	49	46	47	42
	Cooling: High Speed	62	60	58	52	48	49	44	60	58	56	51	48	49	44
	Heating: Low Speed	61	57	55	49	45	46	40	59	55	53	48	45	46	40
	Heating: Med Speed	62	58	57	50	46	47	42	60	56	55	49	46	47	42
	Heating: High Speed	62	59	58	51	48	49	43	60	57	56	50	48	49	43
TSM/L18	Fan Only: Low Speed	60	57	55	48	45	46	40	60	57	55	48	45	46	40
	Fan Only: Med Speed	61	58	57	50	47	47	42	61	58	57	50	47	47	42
	Fan Only: High Speed	63	60	58	52	49	49	44	63	60	58	52	49	49	44
	Cooling: Low Speed	60	57	55	48	45	46	40	58	55	53	47	45	46	40
	Cooling: Med Speed	61	59	57	50	47	47	42	59	57	55	49	47	47	42
	Cooling: High Speed	63	60	58	51	48	49	44	61	58	56	50	48	49	44
	Heating: Low Speed	63	59	56	50	45	45	40	61	57	54	49	45	45	40
	Heating: Med Speed	63	59	57	51	46	47	41	61	57	55	50	46	47	41
	Heating: High Speed	64	60	58	52	48	49	43	62	58	56	51	48	49	43

Table Continued On Next Page

TSM/TSL Series (60 Hz) – Standard and w/UltraQuiet Technology

Tested in accordance with AHRI 350

Octave Band Sound Power Level, (dB re 1pW)

Table Continued From Previous Page

Model	Mode	Free Inlet & Case Radiated							Free Inlet & Case Radiated w/UltraQuiet Technology						
		Octave Band Frequency, Hz							Octave Band Frequency, Hz						
		125	250	500	1000	2000	4000	8000	125	250	500	1000	2000	4000	8000
TSM/L24	Fan Only: Low Speed	53	50	46	41	36	33	34	53	50	46	41	36	33	34
	Fan Only: Med Speed	56	54	50	46	43	39	35	56	54	50	46	43	39	35
	Fan Only: High Speed	62	59	56	52	50	47	41	62	59	56	52	50	47	41
	Cooling: Low Speed	54	51	49	44	37	33	34	52	49	47	43	37	33	34
	Cooling: Med Speed	57	54	51	47	41	38	35	55	52	49	46	41	38	35
	Cooling: High Speed	62	59	55	52	48	45	39	60	57	53	51	48	45	39
	Heating: Low Speed	70	53	50	47	42	38	36	68	51	48	46	42	38	36
	Heating: Med Speed	69	55	52	48	44	41	37	67	53	50	47	44	41	37
	Heating: High Speed	69	60	56	53	51	48	45	67	58	54	52	51	48	45
TSM/L30	Fan Only: Low Speed	64	61	57	54	52	49	47	64	61	57	54	52	49	47
	Fan Only: Med Speed	68	65	60	57	56	53	48	68	65	60	57	56	53	48
	Fan Only: High Speed	74	71	63	59	55	55	50	74	71	63	59	55	55	50
	Cooling: Low Speed	65	62	55	51	46	45	39	63	60	53	50	46	45	39
	Cooling: Med Speed	69	65	57	53	49	49	43	67	63	55	52	49	49	43
	Cooling: High Speed	74	71	63	59	55	55	50	72	69	61	58	55	55	50
	Heating: Low Speed	70	62	56	51	46	46	40	68	60	54	50	46	46	40
	Heating: Med Speed	71	65	58	53	49	49	44	69	63	56	52	49	49	44
	Heating: High Speed	75	71	63	58	55	55	50	73	69	61	57	55	55	50
TSM/L36	Fan Only: Low Speed	64	61	57	54	52	49	47	64	61	57	54	52	49	47
	Fan Only: Med Speed	68	65	60	57	56	53	48	68	65	60	57	56	53	48
	Fan Only: High Speed	74	71	66	63	62	60	57	74	71	66	63	62	60	57
	Cooling: Low Speed	64	61	57	53	51	48	45	62	59	55	52	51	48	45
	Cooling: Med Speed	68	64	60	57	54	52	46	66	62	58	56	54	52	46
	Cooling: High Speed	73	71	64	61	59	58	54	71	69	62	60	59	58	54
	Heating: Low Speed	68	62	57	53	51	49	44	66	60	55	52	51	49	44
	Heating: Med Speed	70	64	60	56	55	53	48	68	62	58	55	55	53	48
	Heating: High Speed	74	71	64	61	60	59	54	72	69	62	60	60	59	54

TRL Series (60 Hz)

Tested in accordance with AHRI 260

Octave Band Sound Power Level, (dB re 1pW)

Model	Mode	Ducted Discharge							Free Air Inlet Combined With Casing (Cabinet) Radiated						
		Octave Band Frequency, Hz							Octave Band Frequency, Hz						
		125	250	500	1000	2000	4000	8000	125	250	500	1000	2000	4000	8000
TRL006	Fan Only: Low Speed	45	42	40	29	26	26	28	55	53	47	40	34	28	28
	Fan Only: High Speed	53	50	48	39	36	36	30	61	59	54	48	42	39	33
	Cooling: Low Speed	54	45	40	30	27	26	28	69	55	49	41	34	30	30
	Cooling: High Speed	56	50	48	39	36	36	30	70	60	54	49	43	40	33
	Heating: Low Speed	50	44	41	30	27	26	28	64	55	51	41	35	29	31
	Heating: High Speed	54	50	49	39	36	37	30	66	60	54	48	43	39	35
TRL009	Fan Only: Low Speed	43	42	43	33	31	27	28	50	52	46	41	37	33	31
	Fan Only: High Speed	52	49	50	43	39	38	35	57	58	54	54	46	44	39
	Cooling: Low Speed	52	43	43	33	30	27	28	66	56	47	41	37	33	33
	Cooling: High Speed	52	49	50	43	39	38	35	66	59	54	55	46	44	40
	Heating: Low Speed	50	44	44	34	31	27	28	63	57	48	43	37	32	31
	Heating: High Speed	54	49	50	44	39	38	34	63	60	54	55	46	43	39
TRL012	Fan Only: Low Speed	51	48	44	41	35	29	30	54	56	48	45	40	35	31
	Fan Only: High Speed	56	51	49	46	41	36	35	60	60	56	50	45	41	36
	Cooling: Low Speed	63	48	44	40	35	29	30	72	57	49	46	42	36	34
	Cooling: High Speed	64	52	49	46	41	36	35	71	60	54	50	46	41	37
	Heating: Low Speed	64	48	45	42	36	30	30	73	58	52	48	44	42	42
	Heating: High Speed	65	51	51	46	40	35	34	73	61	54	50	46	43	42
TRL015	Fan Only: Low Speed	46	47	43	40	32	29	29	52	54	47	42	38	31	29
	Fan Only: High Speed	52	53	52	48	40	39	37	60	61	59	52	47	44	40
	Cooling: Low Speed	56	49	44	40	33	30	30	67	55	50	44	39	32	34
	Cooling: High Speed	57	54	51	48	41	39	37	68	61	57	52	47	44	40
	Heating: Low Speed	58	48	44	40	33	29	29	70	56	50	45	44	35	40
	Heating: High Speed	58	54	52	48	41	39	37	71	61	55	52	48	43	41

TRL Series (60 Hz) w/UltraQuiet Technology

Tested in accordance with AHRI 260

Octave Band Sound Power Level, (dB re 1pW)

Model	Mode	Ducted Discharge							Free Air Inlet Combined With Casing (Cabinet) Radiated						
		Octave Band Frequency, Hz							Octave Band Frequency, Hz						
		125	250	500	1000	2000	4000	8000	125	250	500	1000	2000	4000	8000
TRL006	Fan Only: Low Speed	45	42	39	31	26	25	28	54	53	47	40	34	28	28
	Fan Only: High Speed	52	49	48	41	36	36	30	60	59	54	49	43	39	32
	Cooling: Low Speed	52	44	40	31	27	25	28	68	53	49	41	34	29	28
	Cooling: High Speed	54	48	47	40	36	36	30	68	58	54	49	43	39	32
	Heating: Low Speed	50	43	41	31	27	26	28	67	54	51	41	36	29	32
	Heating: High Speed	54	49	48	40	36	37	30	69	58	55	49	44	40	35
TRL009	Fan Only: Low Speed	43	42	42	35	30	27	28	50	52	47	42	37	33	30
	Fan Only: High Speed	51	48	49	46	39	38	34	56	58	54	55	46	43	39
	Cooling: Low Speed	50	42	42	35	30	27	28	65	54	47	41	37	33	31
	Cooling: High Speed	50	48	49	45	39	38	34	65	58	54	56	46	44	38
	Heating: Low Speed	50	43	44	35	30	27	28	66	55	48	43	38	33	31
	Heating: High Speed	54	48	49	45	39	37	34	66	58	54	55	47	43	39
TRL012	Fan Only: Low Speed	51	48	44	40	35	30	30	53	57	48	45	41	35	31
	Fan Only: High Speed	56	51	49	46	41	37	35	58	61	57	50	45	41	36
	Cooling: Low Speed	55	49	44	40	35	30	30	69	57	50	46	42	37	34
	Cooling: High Speed	57	52	49	46	41	36	35	67	61	55	50	46	42	37
	Heating: Low Speed	66	48	45	41	37	30	29	69	58	51	48	44	41	35
	Heating: High Speed	67	51	51	45	40	36	34	69	61	53	50	45	41	35
TRL015	Fan Only: Low Speed	46	47	43	40	32	29	29	52	53	46	42	38	31	29
	Fan Only: High Speed	52	54	52	48	40	39	37	60	61	58	52	47	44	40
	Cooling: Low Speed	56	50	44	40	33	30	30	69	54	50	44	40	33	34
	Cooling: High Speed	57	54	51	49	41	39	37	69	60	57	52	48	44	39
	Heating: Low Speed	57	48	44	40	33	29	29	68	55	50	46	45	35	40
	Heating: High Speed	57	54	52	48	41	38	37	70	60	55	52	49	43	41

TE Series (60 Hz)

Tested in accordance with AHRI 260

Octave Band Sound Power Level, (dB re 1pW)

Model	Mode	Ducted Discharge							Free Inlet & Case Radiated						
		Octave Band Frequency, Hz							Octave Band Frequency, Hz						
		125	250	500	1000	2000	4000	8000	125	250	500	1000	2000	4000	8000
TE026	Fan Only	49	49	48	44	37	36	35	56	52	53	45	42	37	32
	Cooling: Part Load	45	46	53	46	43	42	34	54	48	55	49	44	39	34
	Cooling: Full Load	49	51	51	48	44	43	36	61	55	56	50	48	43	36
	Heating: Part Load	49	49	55	48	46	56	39	62	51	58	53	47	43	40
	Heating: Full Load	55	53	54	50	46	45	35	67	58	60	52	47	45	38
TE038	Fan Only	54	51	50	46	39	35	33	58	53	48	42	40	34	30
	Cooling: Part Load	57	53	53	51	46	43	36	61	55	52	48	44	40	35
	Cooling: Full Load	60	56	57	55	51	50	41	63	57	55	50	45	43	37
	Heating: Part Load	60	55	55	52	48	44	36	65	58	57	50	44	42	39
	Heating: Full Load	64	58	59	57	53	61	43	68	59	57	53	48	46	42
TE049	Fan Only	62	55	54	50	43	41	40	62	58	53	46	43	39	35
	Cooling: Part Load	60	57	57	54	50	49	43	63	57	57	52	47	45	41
	Cooling: Full Load	60	58	59	57	53	53	45	72	63	61	53	50	46	43
	Heating: Part Load	64	59	57	55	51	50	38	68	60	60	54	49	47	45
	Heating: Full Load	64	60	61	59	55	65	49	71	64	63	53	48	47	45
TE064	Fan Only	56	53	52	50	44	41	33	62	56	51	46	42	39	31
	Cooling: Part Load	62	59	59	56	52	51	44	66	60	64	53	50	48	41
	Cooling: Full Load	65	60	60	58	54	53	46	68	64	65	55	52	50	44
	Heating: Part Load	66	64	62	60	57	55	49	68	64	62	56	54	52	46
	Heating: Full Load	70	68	66	65	62	60	54	72	68	66	61	59	58	52
TE072	Fan Only	56	51	56	51	46	42	37	63	55	50	47	43	42	35
	Cooling: Part Load	62	57	65	58	55	52	46	66	61	58	57	52	51	43
	Cooling: Full Load	68	64	70	66	62	60	55	70	67	63	61	59	59	52
	Heating: Part Load	64	59	67	60	56	53	47	67	62	60	56	53	53	46
	Heating: Full Load	69	67	72	69	63	61	56	72	68	64	63	60	61	55

TE Series (60 Hz) w/UltraQuiet Technology

Tested in accordance with AHRI 260

Octave Band Sound Power Level, (dB re 1pW)

Model	Mode	Ducted Discharge w/UltraQuiet Technology							Free Inlet & Case Radiated w/UltraQuiet Technology						
		Octave Band Frequency, Hz							Octave Band Frequency, Hz						
		125	250	500	1000	2000	4000	8000	125	250	500	1000	2000	4000	8000
TE026	Fan Only	49	49	48	44	37	36	35	55	52	51	43	39	35	32
	Cooling: Part Load	43	44	50	44	41	40	32	52	45	54	46	40	36	30
	Cooling: Full Load	47	48	48	46	42	41	34	60	52	55	47	45	39	31
	Heating: Part Load	47	47	52	46	44	53	37	60	49	57	50	44	40	38
	Heating: Full Load	52	50	51	48	44	43	33	65	55	59	50	44	41	33
TE038	Fan Only	54	51	50	46	39	35	33	57	53	46	40	37	32	30
	Cooling: Part Load	54	50	50	48	44	41	34	60	52	51	45	41	36	30
	Cooling: Full Load	57	53	54	52	48	48	39	61	54	53	47	42	39	33
	Heating: Part Load	57	52	52	49	46	42	34	63	55	56	47	41	38	34
	Heating: Full Load	61	55	56	54	50	58	41	66	57	56	50	45	42	40
TE049	Fan Only	62	55	54	50	43	41	40	61	58	51	44	40	37	35
	Cooling: Part Load	57	54	54	51	48	47	41	61	54	56	49	43	42	36
	Cooling: Full Load	57	55	56	54	50	50	43	70	60	59	50	47	42	38
	Heating: Part Load	61	56	54	52	48	48	36	66	58	59	51	46	44	44
	Heating: Full Load	61	57	58	56	52	62	47	69	61	61	51	45	43	40
TE064	Fan Only	56	53	52	50	44	41	33	61	56	49	44	39	36	31
	Cooling: Part Load	59	56	56	53	49	48	42	64	57	62	50	47	44	36
	Cooling: Full Load	62	57	57	55	51	50	44	66	61	64	52	48	47	40
	Heating: Part Load	63	61	59	57	54	52	47	67	61	61	54	51	48	41
	Heating: Full Load	67	65	63	62	59	57	51	70	66	64	58	55	54	51
TE072	Fan Only	Data Not Available At This Time							62	56	48	45	40	39	35
	Cooling: Part Load								64	58	57	55	49	47	38
	Cooling: Full Load								68	65	62	58	55	55	48
	Heating: Part Load								66	59	58	53	50	49	41
	Heating: Full Load								70	65	62	60	57	57	53

TS Series (60 Hz)

Tested in accordance with AHRI 260

Octave Band Sound Power Level, (dB re 1pW)

Model	Mode	Ducted Discharge							Free Inlet & Case Radiated						
		Octave Band Frequency, Hz							Octave Band Frequency, Hz						
		125	250	500	1000	2000	4000	8000	125	250	500	1000	2000	4000	8000
TS006	Fan Only: Low Speed	54	45	37	36	31	30	33	58	48	43	36	30	30	34
	Fan Only: High Speed	61	56	45	45	41	39	35	67	59	51	45	41	40	38
	Cooling: Low Speed	52	43	37	35	29	30	34	63	59	49	40	32	33	37
	Cooling: High Speed	61	54	45	45	40	38	35	68	59	52	45	41	40	39
	Heating: Low Speed	57	48	41	40	34	31	33	63	52	49	41	36	34	35
	Heating: High Speed	62	55	46	46	42	39	35	67	58	53	46	42	40	39
TS009	Fan Only: Low Speed	58	54	48	47	43	41	36	62	57	52	46	42	40	38
	Fan Only: High Speed	61	56	51	51	46	44	39	64	60	55	49	45	43	41
	Cooling: Low Speed	61	54	48	47	43	41	36	67	58	61	54	46	44	41
	Cooling: High Speed	64	57	51	51	46	45	40	69	61	61	54	47	46	43
	Heating: Low Speed	60	55	49	48	43	41	36	67	59	62	56	50	48	44
	Heating: High Speed	64	58	51	51	47	45	39	68	60	59	56	50	48	47
TS012	Fan Only: Low Speed	63	57	51	53	48	46	42	66	58	54	52	46	45	42
	Fan Only: High Speed	64	61	54	57	53	51	47	67	64	58	56	50	50	47
	Cooling: Low Speed	64	57	51	52	48	46	41	66	59	56	52	46	46	43
	Cooling: High Speed	67	63	54	58	53	52	48	68	64	59	57	51	51	48
	Heating: Low Speed	63	57	51	53	49	47	42	69	59	57	53	47	45	43
	Heating: High Speed	66	62	54	58	53	52	48	68	63	59	57	50	50	48
TS018	Fan Only: Low Speed	48	51	49	46	42	42	33	53	51	51	41	40	38	30
	Fan Only: High Speed	52	56	62	54	51	52	45	60	58	56	50	49	47	40
	Cooling: Low Speed	49	50	45	45	43	42	32	60	53	52	48	45	41	34
	Cooling: High Speed	51	55	61	53	50	50	42	62	58	58	54	53	48	42
	Heating: Low Speed	50	50	51	46	43	42	33	67	55	52	48	48	42	36
	Heating: High Speed	51	57	61	54	50	51	44	67	59	58	54	53	49	42
TS024	Fan Only: Low Speed	52	55	56	52	48	48	40	58	55	55	46	44	43	35
	Fan Only: High Speed	57	61	51	60	56	57	51	63	61	59	54	52	51	45
	Cooling: Low Speed	52	54	55	51	48	48	39	61	56	55	50	47	44	38
	Cooling: High Speed	56	60	65	59	56	56	50	64	61	60	56	54	51	46
	Heating: Low Speed	54	55	57	52	48	48	40	67	57	56	50	47	45	39
	Heating: High Speed	56	61	65	60	56	56	50	68	61	60	56	54	52	46
TS030	Fan Only: Low Speed	57	59	63	57	54	54	47	62	58	58	51	49	47	41
	Fan Only: High Speed	62	66	69	66	62	62	57	66	64	62	59	56	55	50
	Cooling: Low Speed	56	58	64	56	53	53	46	62	58	57	51	48	47	41
	Cooling: High Speed	61	66	69	65	62	62	57	66	63	61	58	56	54	49
	Heating: Low Speed	59	59	63	57	54	53	47	67	60	60	52	49	48	43
	Heating: High Speed	61	66	68	65	61	61	56	68	64	62	58	56	55	50
TS036	Fan Only: Low Speed	57	55	57	53	48	46	37	59	55	49	43	41	39	33
	Fan Only: High Speed	71	69	68	68	63	62	54	72	69	59	56	55	54	48
	Cooling: Low Speed	59	55	56	53	49	47	38	60	55	50	47	42	40	35
	Cooling: High Speed	70	69	68	67	63	63	56	72	69	58	56	55	54	48
	Heating: Low Speed	59	56	57	53	49	46	40	64	56	52	47	43	41	40
	Heating: High Speed	70	69	68	67	62	60	53	72	68	58	55	54	53	47
TS042	Fan Only: Low Speed	60	57	59	55	50	49	40	61	57	51	44	43	41	35
	Fan Only: High Speed	71	70	69	69	64	64	57	72	70	60	57	55	55	50
	Cooling: Low Speed	61	57	68	54	51	50	41	65	59	54	49	45	43	39
	Cooling: High Speed	70	70	69	68	64	64	58	72	69	59	57	55	55	49
	Heating: Low Speed	61	58	58	55	50	48	41	67	59	54	48	45	44	42
	Heating: High Speed	70	70	69	68	60	62	55	72	69	59	56	55	54	49

Table Continued On Next Page

TS Series (60 Hz)

Tested in accordance with AHRI 260

Octave Band Sound Power Level, (dB re 1pW)

Table Continued From Previous Page

Model	Mode	Ducted Discharge							Free Inlet & Case Radiated						
		Octave Band Frequency, Hz							Octave Band Frequency, Hz						
		125	250	500	1000	2000	4000	8000	125	250	500	1000	2000	4000	8000
TS048	Fan Only: Low Speed	64	60	61	57	53	52	44	63	60	53	46	45	44	38
	Fan Only: High Speed	72	72	71	70	65	66	60	72	70	61	57	56	56	51
	Cooling: Low Speed	62	59	60	56	53	53	45	71	63	58	52	48	46	44
	Cooling: High Speed	71	71	70	69	65	66	60	72	69	61	58	56	56	51
	Heating: Low Speed	63	60	59	56	52	51	42	70	62	57	50	47	46	45
	Heating: High Speed	71	71	70	69	64	64	58	72	69	61	56	55	55	51
TS060	Fan Only: Low Speed	70	73	68	67	62	62	56	70	73	62	61	56	56	49
	Fan Only: High Speed	74	72	70	72	68	68	63	74	72	64	63	61	61	55
	Cooling: Low Speed	69	74	68	66	61	62	56	69	72	63	60	55	55	48
	Cooling: High Speed	74	72	70	71	67	68	63	73	70	64	63	61	61	54
	Heating: Low Speed	71	70	67	67	61	60	54	72	71	63	61	56	56	50
	Heating: High Speed	72	72	69	71	67	67	61	73	70	64	62	60	60	54
TS070	Fan Only: Low Speed	71	74	69	68	63	64	58	71	74	63	61	56	57	50
	Fan Only: High Speed	74	73	70	72	68	69	64	74	72	65	63	61	62	55
	Cooling: Low Speed	72	77	65	69	64	66	60	75	77	67	63	58	59	53
	Cooling: High Speed	76	74	72	74	70	71	66	75	72	67	66	63	63	57
	Heating: Low Speed	74	73	70	70	64	64	57	76	75	67	64	59	60	54
	Heating: High Speed	74	75	72	74	72	70	65	75	72	67	64	62	63	57

TS Series (60 Hz) w/UltraQuiet Technology

Tested in accordance with AHRI 260

Octave Band Sound Power Level, (dB re 1pW)

Model	Mode	Ducted Discharge w/UltraQuiet Techology							Free Inlet & Case Radiated w/UltraQuiet Technology						
		Octave Band Frequency, Hz							Octave Band Frequency, Hz						
		125	250	500	1000	2000	4000	8000	125	250	500	1000	2000	4000	8000
TS006	Fan Only: Low Speed	54	45	37	36	31	30	33	Option Not Available						
	Fan Only: High Speed	61	56	45	45	41	39	35							
	Cooling: Low Speed	50	41	36	33	28	28	32							
	Cooling: High Speed	58	51	43	43	38	36	33							
	Heating: Low Speed	55	46	39	38	32	30	31							
	Heating: High Speed	59	52	44	44	40	37	33							
TS009	Fan Only: Low Speed	58	54	48	47	43	41	36	Option Not Available						
	Fan Only: High Speed	61	56	51	51	46	44	39							
	Cooling: Low Speed	58	52	46	45	41	39	34							
	Cooling: High Speed	60	54	48	48	44	43	38							
	Heating: Low Speed	57	53	46	45	41	39	35							
	Heating: High Speed	61	55	49	48	44	42	37							
TS012	Fan Only: Low Speed	63	57	51	53	48	46	42	Option Not Available						
	Fan Only: High Speed	64	61	54	57	53	51	47							
	Cooling: Low Speed	61	54	48	50	45	44	39							
	Cooling: High Speed	63	60	52	55	51	49	46							
	Heating: Low Speed	60	54	48	50	46	44	40							
	Heating: High Speed	62	59	52	55	51	49	45							
TS018	Fan Only: Low Speed	48	51	49	46	42	42	33	52	51	49	40	37	36	30
	Fan Only: High Speed	52	56	62	54	51	52	45	59	56	53	46	44	42	37
	Cooling: Low Speed	47	48	43	43	41	40	30	59	50	51	46	42	37	29
	Cooling: High Speed	48	52	58	50	48	48	40	60	56	57	51	49	45	38
	Heating: Low Speed	48	48	48	44	41	40	31	66	52	50	46	45	38	31
	Heating: High Speed	48	54	58	51	48	48	42	65	56	56	51	49	45	41
TS024	Fan Only: Low Speed	52	55	56	52	48	48	40	57	55	53	44	41	40	35
	Fan Only: High Speed	57	61	51	60	56	57	51	62	59	56	50	48	46	42
	Cooling: Low Speed	49	51	52	48	46	46	37	60	53	53	47	44	40	33
	Cooling: High Speed	53	57	62	56	53	53	48	62	58	58	53	51	48	41
	Heating: Low Speed	51	52	54	49	46	46	38	66	54	54	48	44	41	34
	Heating: High Speed	53	58	62	57	53	53	48	66	59	58	53	51	48	45
TS030	Fan Only: Low Speed	57	59	63	57	54	54	47	61	58	56	49	46	45	41
	Fan Only: High Speed	62	66	69	66	62	62	57	65	62	59	55	51	50	47
	Cooling: Low Speed	53	55	61	53	50	50	44	61	55	56	49	45	43	36
	Cooling: High Speed	58	63	66	62	59	59	54	64	61	60	55	52	51	45
	Heating: Low Speed	56	56	60	54	51	50	45	66	57	58	50	46	44	38
	Heating: High Speed	58	63	65	62	58	58	53	66	61	60	55	52	51	49
TS036	Fan Only: Low Speed	57	55	57	53	48	46	37	58	55	47	41	38	36	33
	Fan Only: High Speed	71	69	68	68	63	62	54	71	67	56	52	50	49	45
	Cooling: Low Speed	56	52	53	50	47	45	36	59	52	48	44	39	36	30
	Cooling: High Speed	67	66	65	64	60	60	53	70	66	57	53	51	50	43
	Heating: Low Speed	56	53	54	50	47	44	38	63	53	50	44	40	37	35
	Heating: High Speed	67	66	65	64	59	57	50	70	66	56	52	51	50	46
TS042	Fan Only: Low Speed	60	57	59	55	50	49	40	60	57	49	43	40	39	35
	Fan Only: High Speed	71	70	69	69	64	64	57	71	68	57	53	51	50	47
	Cooling: Low Speed	58	54	65	51	48	48	39	64	56	52	47	42	39	34
	Cooling: High Speed	67	67	66	65	61	61	55	70	66	58	54	52	51	45
	Heating: Low Speed	58	55	55	52	48	46	39	66	56	53	46	42	40	37
	Heating: High Speed	67	67	66	65	57	59	52	70	66	58	53	51	50	47

Table Continued On Next Page

TS Series (60 Hz) w/UltraQuiet Technology

Tested in accordance with AHRI 260

Octave Band Sound Power Level, (dB re 1pW)

Table Continued From Previous Page

Model	Mode	Ducted Discharge w/UltraQuiet Techology							Free Inlet & Case Radiated w/UltraQuiet Technology						
		Octave Band Frequency, Hz							Octave Band Frequency, Hz						
		125	250	500	1000	2000	4000	8000	125	250	500	1000	2000	4000	8000
TS048	Fan Only: Low Speed	64	60	61	57	53	52	44	62	60	51	44	42	41	38
	Fan Only: High Speed	72	72	71	70	65	66	60	71	68	59	53	52	51	48
	Cooling: Low Speed	59	56	57	53	50	50	43	69	60	57	49	45	42	39
	Cooling: High Speed	67	67	67	66	62	63	57	70	66	59	55	53	53	47
	Heating: Low Speed	60	57	56	53	49	48	40	69	59	56	48	44	42	40
	Heating: High Speed	67	67	67	66	61	61	55	70	67	59	53	52	51	49
TS060	Fan Only: Low Speed	70	73	68	67	62	62	56	69	73	60	59	53	53	49
	Fan Only: High Speed	74	72	70	72	68	68	63	73	70	62	59	57	56	52
	Cooling: Low Speed	66	70	65	63	58	59	53	68	69	61	57	52	51	43
	Cooling: High Speed	70	68	67	67	64	65	60	71	67	63	60	57	57	50
	Heating: Low Speed	67	67	64	64	58	57	51	70	68	62	58	53	52	45
	Heating: High Speed	68	68	66	67	64	64	58	71	68	62	59	57	57	52
TS070	Fan Only: Low Speed	71	74	69	68	63	64	58	70	75	61	60	53	54	50
	Fan Only: High Speed	74	73	70	72	68	69	64	73	70	62	59	57	57	52
	Cooling: Low Speed	68	73	62	66	61	63	57	73	74	66	61	55	55	48
	Cooling: High Speed	72	70	68	70	67	67	63	73	69	66	63	60	60	53
	Heating: Low Speed	70	69	67	67	61	61	54	74	72	65	61	56	56	49
	Heating: High Speed	70	71	68	70	68	67	62	73	70	65	61	59	59	55

TZ Series (60 Hz)

Tested in accordance with AHRI 260

Octave Band Sound Power Level, (dB re 1pW)

Model	Mode	Ducted Discharge							Free Inlet & Case Radiated						
		Octave Band Frequency, Hz							Octave Band Frequency, Hz						
		125	250	500	1000	2000	4000	8000	125	250	500	1000	2000	4000	8000
TZ024	Fan Only	51	42	42	36	31	29	35	52	46	44	38	32	31	36
	Cooling: Part Load	62	55	53	51	48	44	38	66	59	57	52	48	45	40
	Cooling: Full Load	67	60	58	58	54	52	45	71	65	60	57	53	52	46
	Heating: Part Load	64	57	56	53	50	46	39	66	60	57	53	49	47	41
	Heating: Full Load	68	62	60	60	55	53	47	71	65	61	58	55	53	48
TZ030	Fan Only	51	42	42	36	31	29	35	52	46	44	38	32	31	36
	Cooling: Part Load	62	55	53	51	48	44	38	66	59	57	52	48	45	36
	Cooling: Full Load	67	60	58	58	57	56	50	71	65	60	57	53	52	46
	Heating: Part Load	65	57	56	53	50	46	39	69	60	57	53	49	47	41
	Heating: Full Load	68	62	60	60	58	57	51	71	65	61	58	55	53	48
TZ036	Fan Only	52	48	49	45	46	42	36	57	54	51	46	42	39	35
	Cooling: Part Load	57	50	52	47	48	45	37	61	58	55	52	45	43	38
	Cooling: Full Load	66	63	64	62	63	62	57	72	68	64	64	59	59	53
	Heating: Part Load	61	52	53	49	49	46	38	69	60	56	54	47	44	39
	Heating: Full Load	68	64	65	64	64	63	58	77	70	66	66	61	61	55
TZ042	Fan Only	51	48	48	44	45	40	35	56	54	49	45	40	34	35
	Cooling: Part Load	55	51	52	48	50	46	38	68	63	60	56	52	48	41
	Cooling: Full Load	67	64	64	62	63	62	57	72	68	63	61	57	54	47
	Heating: Part Load	63	53	53	49	50	47	39	71	61	60	55	50	48	45
	Heating: Full Load	68	65	66	64	64	63	59	74	69	64	62	58	55	48
TZ048	Fan Only	57	52	50	47	44	38	35	62	57	54	51	44	38	36
	Cooling: Part Load	70	65	62	60	59	58	50	73	68	64	62	57	54	48
	Cooling: Full Load	76	71	65	66	63	62	56	77	72	67	66	62	61	54
	Heating: Part Load	71	66	58	61	60	59	52	74	69	64	63	58	55	49
	Heating: Full Load	76	72	67	67	65	64	58	78	73	68	67	63	62	56
TZ060	Fan Only	57	52	50	47	44	38	35	62	57	54	51	44	38	36
	Cooling: Part Load	71	65	62	60	60	58	51	73	68	64	62	57	54	48
	Cooling: Full Load	76	71	65	66	65	63	57	77	72	67	66	62	61	54
	Heating: Part Load	71	66	58	61	61	59	53	74	69	64	63	58	55	49
	Heating: Full Load	75	69	67	66	66	65	60	77	73	68	67	63	62	56

TZ Series (60 Hz) w/UltraQuiet Technology

Tested in accordance with AHRI 260

Octave Band Sound Power Level, (dB re 1pW)

Model	Mode	Ducted Discharge w/UltraQuiet Technology							Free Inlet & Case Radiated w/UltraQuiet Technology						
		Octave Band Frequency, Hz							Octave Band Frequency, Hz						
		125	250	500	1000	2000	4000	8000	125	250	500	1000	2000	4000	8000
TZ024	Fan Only	50	41	41	35	30	28	34	51	45	43	37	31	30	35
	Cooling: Part Load	61	54	52	50	47	43	37	65	58	56	51	47	44	39
	Cooling: Full Load	66	59	57	57	53	51	44	70	64	59	56	52	51	45
	Heating: Part Load	63	56	55	52	49	45	38	65	59	56	52	48	46	40
	Heating: Full Load	67	61	59	59	54	52	46	70	64	60	57	54	52	47
TZ030	Fan Only	50	41	41	35	30	28	34	51	45	43	37	31	30	35
	Cooling: Part Load	61	54	52	50	47	43	37	65	58	56	51	47	44	35
	Cooling: Full Load	66	59	57	57	56	55	49	70	64	59	56	52	51	45
	Heating: Part Load	64	56	55	52	49	45	38	67	59	56	52	48	46	40
	Heating: Full Load	67	61	59	59	57	56	50	70	64	60	57	54	52	47
TZ036	Fan Only	51	47	48	44	45	41	35	55	52	49	45	41	37	34
	Cooling: Part Load	56	49	51	46	47	44	36	59	57	54	51	44	41	36
	Cooling: Full Load	65	62	63	61	62	61	56	71	67	63	62	58	57	51
	Heating: Part Load	60	51	52	48	48	45	37	68	59	55	52	45	43	37
	Heating: Full Load	67	63	64	63	63	62	57	75	68	64	64	59	59	54
TZ042	Fan Only	50	47	47	43	44	39	34	54	53	47	43	38	33	33
	Cooling: Part Load	54	50	51	47	49	45	37	66	62	58	55	50	47	39
	Cooling: Full Load	66	63	63	61	62	61	56	70	67	61	59	55	52	45
	Heating: Part Load	62	52	52	48	49	46	38	69	59	59	53	49	46	43
	Heating: Full Load	67	64	65	63	63	62	58	73	68	62	61	57	54	47
TZ048	Fan Only	56	51	49	46	43	37	34	61	56	53	50	43	37	35
	Cooling: Part Load	69	64	61	59	58	57	49	72	67	63	61	56	53	47
	Cooling: Full Load	75	70	64	65	62	61	55	76	71	66	65	61	60	53
	Heating: Part Load	70	65	57	60	59	58	51	73	68	63	62	57	54	48
	Heating: Full Load	75	71	66	66	64	63	57	77	72	67	66	62	61	55
TZ060	Fan Only	56	51	49	46	43	37	34	61	56	53	50	43	37	35
	Cooling: Part Load	70	64	61	59	59	57	50	72	67	63	61	56	53	47
	Cooling: Full Load	75	70	64	65	64	62	56	76	71	66	65	61	60	52
	Heating: Part Load	70	65	57	60	60	58	52	73	68	63	62	57	54	48
	Heating: Full Load	74	68	66	65	65	64	59	76	72	67	66	62	61	55

TY Series (60 Hz)

Tested in accordance with AHRI 260

Octave Band Sound Power Level, (dB re 1pW)

Model	Mode	Ducted Discharge							Free Inlet & Case Radiated						
		Octave Band Frequency, Hz							Octave Band Frequency, Hz						
		125	250	500	1000	2000	4000	8000	125	250	500	1000	2000	4000	8000
TY024	Fan Only	51	42	42	36	31	29	35	52	46	44	38	32	31	36
	Cooling: Part Load	62	55	53	51	48	44	38	66	59	57	52	48	45	40
	Cooling: Full Load	67	60	58	58	54	52	45	71	65	60	57	53	52	46
	Heating: Part Load	64	57	56	53	50	46	39	66	60	57	53	49	47	41
	Heating: Full Load	68	62	60	60	55	53	47	71	65	61	58	55	53	48
TY030	Fan Only	51	42	42	36	31	29	35	52	46	44	38	32	31	36
	Cooling: Part Load	62	55	53	51	48	44	38	66	59	57	52	48	45	36
	Cooling: Full Load	67	60	58	58	57	56	50	71	65	60	57	53	52	46
	Heating: Part Load	65	57	56	53	50	46	39	69	60	57	53	49	47	41
	Heating: Full Load	68	62	60	60	58	57	51	71	65	61	58	55	53	48
TY036	Fan Only	52	48	49	45	46	42	36	57	54	51	46	42	39	35
	Cooling: Part Load	57	50	52	47	48	45	37	61	58	55	52	45	43	38
	Cooling: Full Load	66	63	64	62	63	62	57	72	68	64	64	59	59	53
	Heating: Part Load	61	52	53	49	49	46	38	69	60	56	54	47	44	39
	Heating: Full Load	68	64	65	64	64	63	58	77	70	66	66	61	61	55
TY042	Fan Only	51	48	48	44	45	40	35	56	54	49	45	40	34	35
	Cooling: Part Load	55	51	52	48	50	46	38	68	63	60	56	52	48	41
	Cooling: Full Load	67	64	64	62	63	62	57	72	68	63	61	57	54	47
	Heating: Part Load	63	53	53	49	50	47	39	71	61	60	55	50	48	45
	Heating: Full Load	68	65	66	64	64	63	59	74	69	64	62	58	55	48
TY048	Fan Only	57	52	50	47	44	38	35	62	57	54	51	44	38	36
	Cooling: Part Load	70	65	62	60	59	58	50	73	68	64	62	57	54	48
	Cooling: Full Load	76	71	65	66	63	62	56	77	72	67	66	62	61	54
	Heating: Part Load	71	66	58	61	60	59	52	74	69	64	63	58	55	49
	Heating: Full Load	76	72	67	67	65	64	58	78	73	68	67	63	62	56
TY060	Fan Only	57	52	50	47	44	38	35	62	57	54	51	44	38	36
	Cooling: Part Load	71	65	62	60	60	58	51	73	68	64	62	57	54	48
	Cooling: Full Load	76	71	65	66	65	63	57	77	72	67	66	62	61	54
	Heating: Part Load	71	66	58	61	61	59	53	74	69	64	63	58	55	49
	Heating: Full Load	75	69	67	66	66	65	60	77	73	68	67	63	62	56

TY Series (60 Hz) w/UltraQuiet Technology

Tested in accordance with AHRI 260

Octave Band Sound Power Level, (dB re 1pW)

Model	Mode	Ducted Discharge w/UltraQuiet Technology							Free Inlet & Case Radiated w/UltraQuiet Technology						
		Octave Band Frequency, Hz							Octave Band Frequency, Hz						
		125	250	500	1000	2000	4000	8000	125	250	500	1000	2000	4000	8000
TY024	Fan Only	50	41	41	35	30	28	34	51	45	43	37	31	30	35
	Cooling: Part Load	61	54	52	50	47	43	37	65	58	56	51	47	44	39
	Cooling: Full Load	66	59	57	57	53	51	44	70	64	59	56	52	51	45
	Heating: Part Load	63	56	55	52	49	45	38	65	59	56	52	48	46	40
	Heating: Full Load	67	61	59	59	54	52	46	70	64	60	57	54	52	47
TY030	Fan Only	50	41	41	35	30	28	34	51	45	43	37	31	30	35
	Cooling: Part Load	61	54	52	50	47	43	37	65	58	56	51	47	44	35
	Cooling: Full Load	66	59	57	57	56	55	49	70	64	59	56	52	51	45
	Heating: Part Load	64	56	55	52	49	45	38	67	59	56	52	48	46	40
	Heating: Full Load	67	61	59	59	57	56	50	70	64	60	57	54	52	47
TY036	Fan Only	51	47	48	44	45	41	35	55	52	49	45	41	37	34
	Cooling: Part Load	56	49	51	46	47	44	36	59	57	54	51	44	41	36
	Cooling: Full Load	65	62	63	61	62	61	56	71	67	63	62	58	57	51
	Heating: Part Load	60	51	52	48	48	45	37	68	59	55	52	45	43	37
	Heating: Full Load	67	63	64	63	63	62	57	75	68	64	64	59	59	54
TY042	Fan Only	50	47	47	43	44	39	34	54	53	47	43	38	33	33
	Cooling: Part Load	54	50	51	47	49	45	37	66	62	58	55	50	47	39
	Cooling: Full Load	66	63	63	61	62	61	56	70	67	61	59	55	52	45
	Heating: Part Load	62	52	52	48	49	46	38	69	59	59	53	49	46	43
	Heating: Full Load	67	64	65	63	63	62	58	73	68	62	61	57	54	47
TY048	Fan Only	56	51	49	46	43	37	34	61	56	53	50	43	37	35
	Cooling: Part Load	69	64	61	59	58	57	49	72	67	63	61	56	53	47
	Cooling: Full Load	75	70	64	65	62	61	55	76	71	66	65	61	60	53
	Heating: Part Load	70	65	57	60	59	58	51	73	68	63	62	57	54	48
	Heating: Full Load	75	71	66	66	64	63	57	77	72	67	66	62	61	55
TY060	Fan Only	56	51	49	46	43	37	34	61	56	53	50	43	37	35
	Cooling: Part Load	70	64	61	59	59	57	50	72	67	63	61	56	53	47
	Cooling: Full Load	75	70	64	65	64	62	56	76	71	66	65	61	60	52
	Heating: Part Load	70	65	57	60	60	58	52	73	68	63	62	57	54	48
	Heating: Full Load	74	68	66	65	65	64	59	76	72	67	66	62	61	55

TR Series (60 Hz)

Tested in accordance with AHRI 260

Octave Band Sound Power Level, (dB re 1pW)

Model	Mode	Ducted Discharge							Case Radiated						
		Octave Band Frequency, Hz							Octave Band Frequency, Hz						
		125	250	500	1000	2000	4000	8000	125	250	500	1000	2000	4000	8000
TR006	Fan Only: Low Speed	61	50	43	39	37	34	33	58	47	44	39	33	30	35
	Fan Only: High Speed	65	57	48	45	43	41	37	62	55	51	47	41	36	35
	Cooling: Low Speed	64	50	43	40	37	34	33	61	52	46	44	34	35	35
	Cooling: High Speed	67	57	48	46	43	41	37	64	57	52	48	41	37	36
	Heating: Low Speed	63	51	44	40	38	35	34	61	53	47	43	35	33	34
	Heating: High Speed	66	57	48	45	42	41	36	62	59	54	48	42	39	35
TR009	Fan Only: Low Speed	69	63	55	54	51	51	47	63	58	55	51	46	42	38
	Fan Only: High Speed	68	63	55	54	51	51	47	65	61	58	54	48	44	40
	Cooling: Low Speed	67	62	54	54	51	50	47	64	60	56	52	46	42	38
	Cooling: High Speed	69	64	56	55	52	52	48	65	61	58	54	48	44	41
	Heating: Low Speed	67	61	54	53	51	50	46	64	60	57	52	48	42	38
	Heating: High Speed	69	64	56	54	52	51	48	65	62	58	54	48	44	40
TR012	Fan Only: Low Speed	68	59	54	52	48	47	42	61	55	50	49	43	38	35
	Fan Only: High Speed	68	63	55	54	51	50	46	64	59	54	54	47	43	38
	Cooling: Low Speed	66	58	54	52	48	46	42	63	58	51	49	43	38	42
	Cooling: High Speed	69	63	56	55	51	51	46	67	62	54	54	48	43	42
	Heating: Low Speed	67	59	54	52	49	47	42	66	58	53	50	44	40	41
	Heating: High Speed	70	63	55	53	51	50	45	67	60	54	53	47	43	41
TR015	Fan Only: Low Speed	63	57	50	52	48	46	40	56	53	49	47	42	38	36
	Fan Only: High Speed	69	58	52	54	50	49	44	63	58	52	51	49	44	39
	Cooling: Low Speed	67	58	50	51	48	46	40	64	61	53	50	46	41	37
	Cooling: High Speed	69	58	52	54	51	50	44	64	62	55	55	49	46	38
	Heating: Low Speed	66	58	51	52	48	46	40	64	61	55	52	48	44	37
	Heating: High Speed	69	58	53	54	50	49	43	64	63	56	55	51	45	38
TR018	Fan Only: Low Speed	62	57	54	51	51	47	41	57	53	48	47	43	38	37
	Fan Only: High Speed	70	58	54	53	54	50	44	62	58	53	52	49	44	38
	Cooling: Low Speed	67	58	53	51	51	47	40	64	60	54	51	46	42	37
	Cooling: High Speed	70	59	53	54	54	50	44	64	62	56	56	51	47	39
	Heating: Low Speed	67	58	54	51	51	47	41	64	60	54	52	47	44	39
	Heating: High Speed	69	58	54	53	53	49	43	64	62	56	56	51	46	38
TR024	Fan Only: Low Speed	60	54	55	53	52	52	44	60	60	55	52	50	45	36
	Fan Only: High Speed	67	58	54	57	54	55	48	65	63	56	55	53	48	38
	Cooling: Low Speed	67	53	54	52	51	51	43	63	60	55	54	49	45	37
	Cooling: High Speed	70	58	54	57	55	55	48	66	64	57	56	53	48	39
	Heating: Low Speed	66	55	55	53	52	52	44	66	61	55	53	50	45	38
	Heating: High Speed	68	58	55	57	54	54	47	67	65	57	56	52	47	42
TR030	Fan Only: Low Speed	68	60	61	59	59	58	51	63	60	57	55	54	50	42
	Fan Only: High Speed	72	61	59	59	60	58	51	65	62	58	57	55	51	43
	Cooling: Low Speed	67	60	59	58	59	57	50	63	61	57	56	54	50	42
	Cooling: High Speed	71	62	59	60	60	58	51	66	63	58	57	55	52	43
	Heating: Low Speed	70	60	61	58	59	58	51	68	61	57	56	54	50	43
	Heating: High Speed	73	61	60	59	60	58	51	69	63	58	57	55	51	43
TR036	Fan Only: Low Speed	64	58	59	57	57	57	49	62	59	56	55	54	49	43
	Fan Only: High Speed	71	64	60	63	61	59	54	66	65	59	59	59	55	47
	Cooling: Low Speed	66	57	58	56	56	56	48	66	60	57	56	54	50	43
	Cooling: High Speed	74	64	60	63	61	60	54	70	65	60	59	59	55	48
	Heating: Low Speed	71	60	60	58	57	57	50	71	62	57	56	54	51	43
	Heating: High Speed	74	64	61	63	60	59	53	72	66	59	59	58	55	47

Table Continued On Next Page

TR Series (60 Hz)

Tested in accordance with AHRI 260

Octave Band Sound Power Level, (dB re 1pW)

Table Continued From Previous Page

Model	Mode	Ducted Discharge							Case Radiated						
		Octave Band Frequency, Hz							Octave Band Frequency, Hz						
		125	250	500	1000	2000	4000	8000	125	250	500	1000	2000	4000	8000
TR042	Fan Only: Low Speed	68	62	62	61	60	61	54	59	59	57	55	53	48	41
	Fan Only: High Speed	73	69	61	65	62	62	57	67	65	61	60	59	56	48
	Cooling: Low Speed	67	61	61	60	60	60	53	69	62	57	55	53	49	42
	Cooling: High Speed	73	68	61	65	63	62	57	73	68	61	61	59	56	49
	Heating: Low Speed	70	62	63	61	60	60	54	71	64	57	55	54	50	44
	Heating: High Speed	77	68	61	65	62	61	56	75	70	60	60	58	56	48
TR048	Fan Only: Low Speed	72	69	65	62	62	60	52	63	60	56	56	53	47	43
	Fan Only: High Speed	74	71	67	65	64	63	55	69	70	63	61	59	55	47
	Cooling: Low Speed	69	67	65	62	62	60	52	69	68	62	59	57	52	45
	Cooling: High Speed	75	71	67	65	64	63	55	73	69	62	62	60	56	48
	Heating: Low Speed	71	67	65	62	62	60	52	72	68	60	59	56	53	45
	Heating: High Speed	74	71	67	64	64	63	54	74	71	64	63	60	56	48
TR060	Fan Only: Low Speed	72	65	64	64	64	64	58	70	65	61	58	56	53	46
	Fan Only: High Speed	78	71	66	69	67	66	61	74	71	64	63	60	58	51
	Cooling: Low Speed	73	64	64	63	63	63	57	70	65	60	58	55	52	45
	Cooling: High Speed	78	71	65	69	66	66	61	71	70	63	63	61	57	50
	Heating: Low Speed	73	65	65	64	64	64	58	72	66	61	58	56	51	44
	Heating: High Speed	78	71	66	70	66	66	61	73	71	64	63	59	56	50

TR Series (60 Hz) w/UltraQuiet Technology

Tested in accordance with AHRI 260

Octave Band Sound Power Level, (dB re 1pW)

Model	Mode	Ducted Discharge w/UltraQuiet Technology							Case Radiated w/UltraQuiet Technology						
		Octave Band Frequency, Hz							Octave Band Frequency, Hz						
		125	250	500	1000	2000	4000	8000	125	250	500	1000	2000	4000	8000
TR006	Fan Only: Low Speed	60	49	43	38	36	33	33	57	47	44	38	32	29	34
	Fan Only: High Speed	64	56	48	44	42	41	36	61	54	50	45	40	34	35
	Cooling: Low Speed	63	49	43	38	36	33	33	61	51	46	42	33	33	34
	Cooling: High Speed	66	56	47	44	42	41	37	63	56	51	47	40	36	35
	Heating: Low Speed	62	50	44	39	37	34	34	61	52	46	42	34	32	36
	Heating: High Speed	65	56	48	44	42	40	36	61	58	53	47	41	38	33
TR009	Fan Only: Low Speed	68	62	54	52	51	50	46	62	58	54	50	45	40	38
	Fan Only: High Speed	67	63	55	53	51	50	47	64	60	58	52	47	43	40
	Cooling: Low Speed	66	61	54	53	50	50	46	64	59	56	51	45	41	37
	Cooling: High Speed	67	63	55	53	51	51	48	64	61	57	53	47	43	40
	Heating: Low Speed	66	60	54	52	50	50	46	64	60	56	51	46	41	40
	Heating: High Speed	68	63	56	53	51	51	47	64	62	57	52	47	43	38
TR012	Fan Only: Low Speed	67	58	53	50	48	46	41	61	54	49	48	42	37	35
	Fan Only: High Speed	67	62	55	52	51	50	45	63	59	53	53	46	42	38
	Cooling: Low Speed	65	57	54	50	47	46	41	63	57	51	48	42	37	41
	Cooling: High Speed	68	62	55	53	51	50	46	66	61	53	53	46	42	42
	Heating: Low Speed	66	58	53	50	48	46	41	66	57	52	48	43	38	42
	Heating: High Speed	69	61	55	52	50	49	45	66	60	54	52	46	42	39
TR015	Fan Only: Low Speed	60	56	50	51	48	46	40	54	50	47	44	39	36	35
	Fan Only: High Speed	67	56	52	53	50	49	44	62	58	51	50	47	43	38
	Cooling: Low Speed	64	56	50	50	48	46	40	64	58	52	46	43	39	35
	Cooling: High Speed	66	55	52	53	50	49	44	63	60	55	53	48	45	37
	Heating: Low Speed	63	56	51	51	48	46	40	64	60	54	49	45	42	39
	Heating: High Speed	66	56	53	53	50	49	44	63	61	56	53	49	44	36
TR018	Fan Only: Low Speed	60	56	54	50	51	47	41	55	50	46	44	40	36	36
	Fan Only: High Speed	68	56	54	52	54	50	44	61	58	52	51	47	43	37
	Cooling: Low Speed	64	56	53	50	51	47	40	64	57	53	47	43	40	35
	Cooling: High Speed	67	56	53	53	54	50	44	63	60	56	54	50	46	38
	Heating: Low Speed	64	56	54	50	51	47	41	64	59	53	49	44	42	41
	Heating: High Speed	66	56	54	52	53	49	43	63	60	56	54	49	45	36
TR024	Fan Only: Low Speed	58	53	54	52	52	51	44	58	57	53	49	47	43	35
	Fan Only: High Speed	65	56	54	56	54	54	48	64	63	55	54	51	47	37
	Cooling: Low Speed	64	52	54	51	51	51	43	63	57	54	50	46	43	35
	Cooling: High Speed	67	55	54	56	54	55	48	65	62	57	54	52	47	38
	Heating: Low Speed	63	53	55	52	52	52	44	66	60	54	50	47	43	40
	Heating: High Speed	64	56	55	56	54	54	47	66	63	57	54	50	46	40
TR030	Fan Only: Low Speed	66	58	61	57	59	58	51	61	57	55	52	51	48	41
	Fan Only: High Speed	70	59	60	58	60	58	51	64	62	57	56	53	50	42
	Cooling: Low Speed	64	58	59	57	59	57	50	63	58	56	52	51	48	40
	Cooling: High Speed	68	60	59	59	60	57	51	65	61	58	55	54	51	42
	Heating: Low Speed	67	58	61	57	59	58	51	68	60	56	53	51	48	45
	Heating: High Speed	69	59	60	57	59	57	51	68	61	58	55	53	50	41
TR036	Fan Only: Low Speed	61	56	59	56	57	56	49	61	58	54	53	52	48	41
	Fan Only: High Speed	69	62	60	62	60	59	54	65	64	57	57	57	53	45
	Cooling: Low Speed	63	55	58	55	56	55	48	64	58	55	54	52	49	42
	Cooling: High Speed	71	61	60	62	61	59	54	68	64	58	56	57	53	46
	Heating: Low Speed	68	58	60	57	57	57	50	69	61	55	53	52	49	41
	Heating: High Speed	71	62	61	62	60	58	53	70	65	57	56	56	53	44

Table Continued On Next Page

TR Series (60 Hz) w/UltraQuiet Technology

Tested in accordance with AHRI 260

Octave Band Sound Power Level, (dB re 1pW)

Table Continued From Previous Page

Model	Mode	Ducted Discharge w/UltraQuiet Technology							Case Radiated w/UltraQuiet Technology						
		Octave Band Frequency, Hz							Octave Band Frequency, Hz						
		125	250	500	1000	2000	4000	8000	125	250	500	1000	2000	4000	8000
TR042	Fan Only: Low Speed	65	60	62	60	60	60	54	58	58	55	53	51	47	39
	Fan Only: High Speed	71	67	61	64	62	61	57	66	64	59	58	57	54	46
	Cooling: Low Speed	64	59	61	58	59	59	52	67	60	55	53	51	48	41
	Cooling: High Speed	70	65	61	64	62	62	57	71	67	59	58	57	54	47
	Heating: Low Speed	67	60	63	60	60	60	53	69	63	55	52	52	48	42
	Heating: High Speed	74	66	61	64	62	61	56	73	69	58	57	56	54	45
TR048	Fan Only: Low Speed	69	67	65	61	62	60	52	62	59	54	54	51	46	41
	Fan Only: High Speed	72	69	67	64	64	62	55	68	69	61	59	57	53	45
	Cooling: Low Speed	66	65	65	61	61	60	52	67	66	60	57	55	51	44
	Cooling: High Speed	72	68	67	64	64	62	55	71	68	60	59	58	54	46
	Heating: Low Speed	67	65	65	61	62	60	52	70	67	58	56	54	51	43
	Heating: High Speed	71	69	67	63	63	62	55	72	70	62	60	58	54	45
TR060	Fan Only: Low Speed	70	63	64	63	64	64	58	69	64	59	56	54	52	44
	Fan Only: High Speed	76	69	66	68	67	66	61	73	70	62	61	58	56	49
	Cooling: Low Speed	69	62	64	62	63	62	56	68	63	58	56	53	51	44
	Cooling: High Speed	75	68	65	68	66	66	61	69	69	61	60	59	55	48
	Heating: Low Speed	70	63	65	63	64	64	58	70	65	59	55	54	49	42
	Heating: High Speed	74	69	66	68	66	66	61	71	70	62	60	57	54	47

TC Series (60 Hz)

Tested in accordance with AHRI 260

Octave Band Sound Power Level, (dB re 1pW)

Model	Mode	Ducted Discharge							Case Radiated						
		Octave Band Frequency, Hz							Octave Band Frequency, Hz						
		125	250	500	1000	2000	4000	8000	125	250	500	1000	2000	4000	8000
TC006	Fan Only: Low Speed	61	50	43	39	37	34	33	58	47	44	39	33	30	35
	Fan Only: High Speed	65	57	48	45	43	41	37	62	55	51	47	41	36	35
	Cooling: Low Speed	64	50	43	40	37	34	33	61	52	46	44	34	35	35
	Cooling: High Speed	67	57	48	46	43	41	37	64	57	52	48	41	37	36
	Heating: Low Speed	63	51	44	40	38	35	34	61	53	47	43	35	33	34
	Heating: High Speed	66	57	48	45	42	41	36	62	59	54	48	42	39	35
TC009	Fan Only: Low Speed	69	63	55	54	51	51	47	63	58	55	51	46	42	38
	Fan Only: High Speed	68	63	55	54	51	51	47	65	61	58	54	48	44	40
	Cooling: Low Speed	67	62	54	54	51	50	47	64	60	56	52	46	42	38
	Cooling: High Speed	69	64	56	55	52	52	48	65	61	58	54	48	44	41
	Heating: Low Speed	67	61	54	53	51	50	46	64	60	57	52	48	42	38
	Heating: High Speed	69	64	56	54	52	51	48	65	62	58	54	48	44	40
TC012	Fan Only: Low Speed	68	59	54	52	48	47	42	61	55	50	49	43	38	35
	Fan Only: High Speed	68	63	55	54	51	50	46	64	59	54	54	47	43	38
	Cooling: Low Speed	66	58	54	52	48	46	42	63	58	51	49	43	38	42
	Cooling: High Speed	69	63	56	55	51	51	46	67	62	54	54	48	43	42
	Heating: Low Speed	67	59	54	52	49	47	42	66	58	53	50	44	40	41
	Heating: High Speed	70	63	55	53	51	50	45	67	60	54	53	47	43	41
TC015	Fan Only: Low Speed	64	57	51	52	48	46	40	59	53	51	48	42	38	36
	Fan Only: High Speed	70	58	53	54	50	50	44	66	58	54	52	49	44	39
	Cooling: Low Speed	68	58	51	52	48	46	40	67	61	55	51	46	41	37
	Cooling: High Speed	70	58	53	54	51	50	44	67	62	57	56	49	46	38
	Heating: Low Speed	67	58	51	52	48	46	40	67	61	57	53	48	44	37
	Heating: High Speed	70	58	53	54	50	49	44	67	63	58	56	51	45	38
TC018	Fan Only: Low Speed	63	57	55	51	51	48	41	60	53	50	48	43	38	37
	Fan Only: High Speed	71	59	54	54	54	50	44	65	58	55	53	49	44	38
	Cooling: Low Speed	68	58	54	51	51	47	41	67	60	56	52	46	42	37
	Cooling: High Speed	71	59	54	54	54	51	44	67	62	58	57	51	47	39
	Heating: Low Speed	68	58	55	51	51	48	41	67	60	56	53	47	44	39
	Heating: High Speed	71	58	55	54	53	50	43	67	62	58	57	51	46	38
TC024	Fan Only: Low Speed	61	54	55	53	52	52	44	63	60	57	53	50	45	36
	Fan Only: High Speed	68	58	55	57	54	55	48	68	63	58	56	53	48	38
	Cooling: Low Speed	68	54	54	53	52	51	44	66	60	57	55	49	45	37
	Cooling: High Speed	71	58	55	57	55	55	48	69	64	59	57	53	48	39
	Heating: Low Speed	67	55	56	54	52	52	44	69	61	57	54	50	45	38
	Heating: High Speed	69	58	55	57	54	54	47	70	65	59	57	52	47	42
TC030	Fan Only: Low Speed	69	60	61	59	59	58	51	66	60	59	56	54	50	42
	Fan Only: High Speed	73	62	60	60	60	58	51	68	62	60	58	55	51	43
	Cooling: Low Speed	69	60	60	59	59	57	50	66	61	59	57	54	50	42
	Cooling: High Speed	72	62	60	60	60	58	51	69	63	60	58	55	52	43
	Heating: Low Speed	71	60	62	59	59	58	51	71	61	59	57	54	50	43
	Heating: High Speed	74	61	60	59	60	58	51	72	63	60	58	55	51	43
TC036	Fan Only: Low Speed	65	58	60	58	57	57	49	65	59	58	56	54	49	43
	Fan Only: High Speed	72	64	61	63	61	59	54	69	65	61	60	59	55	47
	Cooling: Low Speed	67	57	59	57	56	56	48	69	60	59	57	54	50	43
	Cooling: High Speed	75	64	61	63	61	60	54	73	65	62	60	59	55	48
	Heating: Low Speed	72	61	60	58	57	57	50	74	62	59	57	54	51	43
	Heating: High Speed	75	64	61	63	60	59	53	75	66	61	60	58	55	47

Table Continued On Next Page

TC Series (60 Hz)

Tested in accordance with AHRI 260

Octave Band Sound Power Level, (dB re 1pW)

Table Continued From Previous Page

Model	Mode	Ducted Discharge							Case Radiated						
		Octave Band Frequency, Hz							Octave Band Frequency, Hz						
		125	250	500	1000	2000	4000	8000	125	250	500	1000	2000	4000	8000
TC042	Fan Only: Low Speed	69	62	63	61	60	61	54	62	59	59	56	53	48	41
	Fan Only: High Speed	74	69	62	65	62	62	57	70	65	63	61	59	56	48
	Cooling: Low Speed	68	61	62	60	60	60	53	72	62	59	56	53	49	42
	Cooling: High Speed	74	68	62	65	63	62	57	76	68	63	62	59	56	49
	Heating: Low Speed	71	63	63	61	60	61	54	74	64	59	56	54	50	44
	Heating: High Speed	78	68	62	65	62	62	56	78	70	62	61	58	56	48
TC048	Fan Only: Low Speed	73	69	66	63	62	61	52	66	60	58	57	53	47	43
	Fan Only: High Speed	75	71	67	65	64	63	55	72	70	65	62	59	55	47
	Cooling: Low Speed	70	67	66	62	62	60	52	72	68	64	60	57	52	45
	Cooling: High Speed	76	71	68	65	64	63	55	76	69	64	63	60	56	48
	Heating: Low Speed	72	67	66	63	62	60	52	75	68	62	60	56	53	45
	Heating: High Speed	75	71	67	64	64	63	55	77	71	66	64	60	56	48
TC060	Fan Only: Low Speed	73	65	65	64	64	64	58	73	65	63	59	56	53	46
	Fan Only: High Speed	79	71	66	70	67	66	61	77	71	66	64	60	58	51
	Cooling: Low Speed	74	64	65	63	63	63	57	73	65	62	59	55	52	45
	Cooling: High Speed	79	71	66	69	66	66	61	74	70	65	64	61	57	50
	Heating: Low Speed	74	65	65	65	64	64	58	75	66	63	59	56	51	44
	Heating: High Speed	79	71	66	70	67	66	61	76	71	66	64	59	56	50

TC Series (60 Hz) w/UltraQuiet Technology

Tested in accordance with AHRI 260

Octave Band Sound Power Level, (dB re 1pW)

Model	Mode	Ducted Discharge w/UltraQuiet Technology							Case Radiated w/UltraQuiet Technology						
		Octave Band Frequency, Hz							Octave Band Frequency, Hz						
		125	250	500	1000	2000	4000	8000	125	250	500	1000	2000	4000	8000
TC006	Fan Only: Low Speed	60	49	43	38	37	34	33	58	47	44	38	32	30	35
	Fan Only: High Speed	65	56	48	45	43	41	37	61	55	50	46	40	35	35
	Cooling: Low Speed	63	50	43	39	37	34	33	61	51	46	43	33	34	34
	Cooling: High Speed	66	56	47	45	43	41	37	63	57	51	48	40	36	36
	Heating: Low Speed	63	50	44	39	38	35	34	61	52	46	42	34	33	37
	Heating: High Speed	65	56	48	44	42	41	36	61	58	53	48	41	38	33
TC009	Fan Only: Low Speed	69	62	54	53	51	51	47	63	58	55	51	45	41	38
	Fan Only: High Speed	68	63	55	53	51	51	48	64	61	58	53	47	43	40
	Cooling: Low Speed	67	61	54	53	51	50	46	64	60	56	51	46	41	38
	Cooling: High Speed	68	63	56	54	52	51	48	64	61	57	53	48	44	41
	Heating: Low Speed	66	61	54	53	51	50	46	64	60	56	52	47	41	40
	Heating: High Speed	68	63	56	53	52	51	48	65	62	57	53	47	43	38
TC012	Fan Only: Low Speed	67	58	54	51	49	47	42	61	54	49	48	42	37	35
	Fan Only: High Speed	68	62	56	53	51	50	46	63	59	53	53	47	42	38
	Cooling: Low Speed	65	58	54	51	48	46	42	63	57	51	48	42	38	41
	Cooling: High Speed	68	62	56	54	51	51	47	66	61	54	53	47	43	42
	Heating: Low Speed	67	58	54	51	49	47	42	66	57	52	49	43	39	43
	Heating: High Speed	69	62	55	52	51	50	45	67	60	54	53	46	42	39
TC015	Fan Only: Low Speed	61	55	51	51	48	46	40	56	50	48	45	40	36	36
	Fan Only: High Speed	68	56	53	54	51	50	44	65	58	53	51	48	43	39
	Cooling: Low Speed	64	56	51	51	48	46	40	67	58	53	47	44	39	36
	Cooling: High Speed	67	55	53	54	51	50	45	66	60	56	54	48	46	38
	Heating: Low Speed	64	55	52	51	48	46	40	67	59	56	50	46	42	39
	Heating: High Speed	66	56	53	53	50	49	44	65	61	57	54	50	44	36
TC018	Fan Only: Low Speed	60	56	54	51	51	48	41	57	50	47	45	41	36	37
	Fan Only: High Speed	68	56	55	53	54	50	44	64	58	54	52	48	43	38
	Cooling: Low Speed	65	55	54	50	51	47	40	67	57	54	48	44	40	36
	Cooling: High Speed	68	56	54	53	54	51	45	66	60	57	55	50	47	39
	Heating: Low Speed	64	56	55	51	51	48	41	67	58	55	50	45	42	41
	Heating: High Speed	67	56	55	53	53	49	44	65	60	57	55	50	45	36
TC024	Fan Only: Low Speed	58	52	55	52	52	52	44	60	57	54	50	48	43	36
	Fan Only: High Speed	66	56	55	56	54	55	48	67	63	57	55	52	47	38
	Cooling: Low Speed	65	51	54	52	51	51	43	66	57	55	51	47	43	36
	Cooling: High Speed	67	55	55	56	55	55	49	68	62	58	55	52	48	39
	Heating: Low Speed	63	52	56	53	52	52	45	69	59	56	51	48	43	40
	Heating: High Speed	65	56	56	56	54	54	48	68	63	58	55	51	46	40
TC030	Fan Only: Low Speed	66	58	61	58	60	58	51	63	57	56	53	52	48	42
	Fan Only: High Speed	70	59	60	59	60	58	52	67	62	59	57	54	50	43
	Cooling: Low Speed	65	57	60	58	59	57	50	66	58	57	53	52	48	41
	Cooling: High Speed	69	59	60	59	60	58	52	68	61	59	56	54	52	43
	Heating: Low Speed	67	58	62	58	59	58	51	71	59	58	54	52	48	45
	Heating: High Speed	70	59	60	58	60	58	51	70	61	59	56	54	50	41
TC036	Fan Only: Low Speed	62	56	60	57	57	57	49	63	58	56	54	53	48	42
	Fan Only: High Speed	70	61	61	63	61	59	54	68	64	59	58	58	54	46
	Cooling: Low Speed	63	55	59	56	56	56	48	67	57	57	55	53	49	43
	Cooling: High Speed	72	61	61	63	61	60	55	71	64	60	58	58	54	47
	Heating: Low Speed	68	58	60	58	57	57	50	71	60	56	54	53	50	42
	Heating: High Speed	71	61	61	62	60	59	53	72	65	59	57	57	54	45

Table Continued On Next Page

TC Series (60 Hz) w/UltraQuiet Technology

Tested in accordance with AHRI 260

Octave Band Sound Power Level, (dB re 1pW)

Table Continued From Previous Page

Model	Mode	Ducted Discharge w/UltraQuiet Technology							Case Radiated w/UltraQuiet Technology						
		Octave Band Frequency, Hz							Octave Band Frequency, Hz						
		125	250	500	1000	2000	4000	8000	125	250	500	1000	2000	4000	8000
TC042	Fan Only: Low Speed	66	60	63	60	60	61	54	60	58	57	54	52	47	40
	Fan Only: High Speed	72	66	62	64	62	62	57	69	64	61	59	58	55	47
	Cooling: Low Speed	64	58	62	59	60	60	53	70	59	57	54	52	48	42
	Cooling: High Speed	71	65	62	65	63	62	58	74	67	61	60	58	55	48
	Heating: Low Speed	68	60	63	61	60	61	54	71	62	56	53	53	49	43
	Heating: High Speed	74	66	62	64	62	61	56	75	69	60	58	57	55	46
TC048	Fan Only: Low Speed	70	67	66	62	62	61	52	64	59	56	55	52	46	42
	Fan Only: High Speed	72	69	68	64	64	63	55	71	69	63	60	58	54	46
	Cooling: Low Speed	67	65	65	61	62	60	52	70	65	62	58	56	51	45
	Cooling: High Speed	73	68	68	65	64	63	55	74	68	62	61	59	55	47
	Heating: Low Speed	68	64	66	62	62	60	52	72	66	59	57	55	52	44
	Heating: High Speed	71	69	68	63	64	63	55	74	70	64	61	59	55	46
TC060	Fan Only: Low Speed	70	63	65	63	64	64	58	71	64	61	57	55	52	45
	Fan Only: High Speed	76	69	67	69	67	66	62	76	70	64	62	59	57	50
	Cooling: Low Speed	70	61	65	62	63	63	57	71	62	60	57	54	51	45
	Cooling: High Speed	75	68	66	68	67	66	61	72	69	63	62	60	56	49
	Heating: Low Speed	71	62	65	64	64	64	58	72	64	60	56	55	50	43
	Heating: High Speed	75	68	67	69	66	66	61	73	70	64	61	58	55	48

TC_L Series (60 Hz)

Tested in accordance with AHRI 260

Octave Band Sound Power Level, (dB re 1pW)

Model	Mode	Ducted Discharge							Free Inlet & Case Radiated						
		Octave Band Frequency, Hz							Octave Band Frequency, Hz						
		125	250	500	1000	2000	4000	8000	125	250	500	1000	2000	4000	8000
TC_L072	Fan Only	74	66	70	63	63	63	54	77	69	71	67	62	57	46
	Cooling: Part Load	75	67	71	63	63	63	55	78	69	71	68	63	57	46
	Cooling: Full Load	76	68	72	64	64	64	55	80	70	72	68	63	58	47
	Heating: Part Load	75	67	71	63	63	63	54	78	69	71	68	63	57	46
	Heating: Full Load	76	68	72	64	64	64	54	80	70	72	68	63	58	47
TC_L096	Fan Only	78	73	76	72	71	71	60	79	73	74	70	65	62	52
	Cooling: Part Load	79	73	76	72	71	71	60	80	73	74	71	66	63	52
	Cooling: Full Load	80	74	77	73	72	72	61	81	74	75	71	66	63	53
	Heating: Part Load	79	73	76	72	71	71	60	80	73	74	71	66	63	52
	Heating: Full Load	80	74	77	73	72	72	61	81	74	75	71	66	63	53
TC_L120	Fan Only	78	75	77	77	74	74	66	79	75	74	72	68	66	58
	Cooling: Part Load	79	76	78	78	75	75	66	80	76	74	73	70	67	60
	Cooling: Full Load	80	77	79	79	76	76	67	81	77	75	74	71	68	61
	Heating: Part Load	79	76	78	78	75	75	66	80	76	74	73	70	67	60
	Heating: Full Load	80	77	79	79	76	76	67	81	77	75	74	71	68	61
TC_L160	Fan Only	78	76	79	76	76	75	68	79	78	75	74	73	73	66
	Cooling: Part Load	78	76	79	76	76	75	69	79	78	75	74	73	73	66
	Cooling: Full Load	79	76	79	76	76	75	69	80	78	75	74	73	73	66
	Heating: Part Load	78	76	79	77	76	75	68	80	78	75	75	73	73	66
	Heating: Full Load	78	76	79	77	76	75	68	80	78	75	74	73	73	66
TC_L192	Fan Only	77	77	80	76	76	74	67	81	77	75	74	74	74	66
	Cooling: Part Load	77	77	80	76	76	75	68	82	78	75	74	73	73	66
	Cooling: Full Load	78	78	80	76	76	75	68	83	78	75	74	76	75	68
	Heating: Part Load	77	78	80	76	76	75	68	82	77	74	73	72	72	64
	Heating: Full Load	78	78	80	77	76	75	68	83	77	74	73	72	72	65
TC_L240	Fan Only	80	82	82	82	80	80	74	84	82	77	78	77	76	70
	Cooling: Part Load	80	82	82	82	81	80	75	84	82	78	78	77	77	70
	Cooling: Full Load	81	82	82	82	81	80	75	85	82	78	79	78	77	71
	Heating: Part Load	80	82	82	82	80	80	74	85	82	78	78	77	77	70
	Heating: Full Load	81	82	82	82	80	80	74	85	82	78	78	77	77	70
TC_L300	Fan Only	84	77	76	76	72	69	63	87	82	77	76	74	73	65
	Cooling: Part Load	84	78	76	76	72	69	64	88	82	77	76	74	73	67
	Cooling: Full Load	85	79	77	77	73	70	64	88	82	77	77	74	73	67
	Heating: Part Load	84	79	76	76	72	69	63	87	83	77	76	75	73	66
	Heating: Full Load	85	79	77	77	72	69	64	88	83	77	76	75	74	67

TC_L Series (60 Hz) w/UltraQuiet Technology

Tested in accordance with AHRI 260

Octave Band Sound Power Level, (dB re 1pW)

Model	Mode	Ducted Discharge w/UltraQuiet Technology							Free Inlet & Case Radiated w/UltraQuiet Technology						
		Octave Band Frequency, Hz							Octave Band Frequency, Hz						
		125	250	500	1000	2000	4000	8000	125	250	500	1000	2000	4000	8000
TC_L072	Fan Only	73	64	67	58	60	60	50	76	68	70	66	61	56	44
	Cooling: Part Load	74	65	68	58	60	60	51	77	68	70	67	62	56	44
	Cooling: Full Load	75	66	69	59	61	61	51	79	69	71	67	62	57	45
	Heating: Part Load	74	65	68	58	60	60	50	77	68	70	67	62	56	44
	Heating: Full Load	75	66	69	59	61	61	51	79	69	71	67	62	57	45
TC_L096	Fan Only	77	72	75	71	70	70	59	78	72	73	69	64	61	51
	Cooling: Part Load	78	72	75	71	70	70	59	79	72	73	70	65	62	51
	Cooling: Full Load	79	73	76	72	71	71	60	80	73	74	70	65	62	52
	Heating: Part Load	78	72	75	71	70	70	59	79	72	73	70	65	62	51
	Heating: Full Load	79	73	76	72	71	71	60	80	73	74	70	65	62	52
TC_L120	Fan Only	77	74	76	76	73	73	65	78	74	73	71	67	65	57
	Cooling: Part Load	78	75	77	77	74	74	65	79	75	73	72	69	66	59
	Cooling: Full Load	79	76	78	78	75	75	66	80	76	74	73	70	67	60
	Heating: Part Load	78	75	77	77	74	74	65	79	76	73	72	69	66	59
	Heating: Full Load	79	76	78	78	75	75	66	80	77	74	73	70	67	60
TC_L160	Fan Only	77	75	77	75	75	73	67	78	77	74	73	72	72	65
	Cooling: Part Load	77	75	78	75	75	73	68	78	77	74	73	72	72	65
	Cooling: Full Load	78	75	78	75	75	74	68	79	77	74	73	72	72	65
	Heating: Part Load	77	75	78	75	75	74	67	79	77	74	74	72	72	65
	Heating: Full Load	77	75	78	76	75	74	67	79	77	74	73	72	72	65
TC_L192	Fan Only	76	76	79	75	75	73	66	79	76	74	73	73	72	65
	Cooling: Part Load	76	76	79	75	75	73	67	81	77	74	72	72	72	64
	Cooling: Full Load	77	76	79	75	75	74	67	82	77	74	72	75	73	67
	Heating: Part Load	76	76	79	75	75	74	67	81	76	73	71	71	70	63
	Heating: Full Load	77	76	79	75	75	73	67	82	76	72	71	71	71	63
TC_L240	Fan Only	79	80	81	81	79	80	73	83	81	76	77	76	75	69
	Cooling: Part Load	79	81	81	81	80	79	74	83	81	76	77	76	75	69
	Cooling: Full Load	80	81	81	81	79	80	73	84	81	77	78	77	76	69
	Heating: Part Load	79	81	81	81	79	79	73	83	81	76	77	76	75	69
	Heating: Full Load	80	81	81	81	79	78	73	84	81	77	77	76	76	69
TC_L300	Fan Only	83	76	75	75	71	68	62	86	81	76	75	73	72	64
	Cooling: Part Load	83	77	75	75	71	68	63	86	81	76	75	73	72	65
	Cooling: Full Load	84	78	76	76	72	69	63	87	81	76	76	73	72	66
	Heating: Part Load	83	78	75	75	71	68	62	86	82	76	75	73	72	65
	Heating: Full Load	84	78	75	76	71	68	63	86	82	76	75	74	72	66

TLV Series (60 Hz)

Tested in accordance with AHRI 260

Octave Band Sound Power Level, (dB re 1pW)

Model	Mode	Ducted Discharge							Free Inlet & Case Radiated						
		Octave Band Frequency, Hz							Octave Band Frequency, Hz						
		125	250	500	1000	2000	4000	8000	125	250	500	1000	2000	4000	8000
TLV084	Fan Only	66	62	66	63	63	62	55	68	66	64	66	62	58	51
	Cooling: Full Load	67	63	66	64	64	63	56	69	67	65	67	63	59	52
	Heating: Full Load	68	64	67	64	64	64	57	70	68	66	67	63	59	53
TLV096	Fan Only	67	63	67	65	64	63	57	69	67	65	68	63	59	52
	Cooling: Full Load	69	65	67	65	66	64	57	70	68	66	69	64	60	53
	Heating: Full Load	69	65	68	65	65	65	58	71	69	67	69	64	60	54
TLV120	Fan Only	69	64	69	66	66	64	58	71	69	67	69	64	60	53
	Cooling: Full Load	70	66	69	66	67	65	58	72	70	68	70	66	61	54
	Heating: Full Load	71	67	70	66	66	67	59	73	71	69	70	66	61	55
TLV150	Fan Only	70	66	70	67	67	66	59	72	70	68	70	66	61	54
	Cooling: Full Load	71	67	70	68	68	66	59	73	71	69	71	67	63	55
	Heating: Full Load	72	68	71	67	68	68	60	74	72	70	71	67	63	56
TLV168	Fan Only	67	66	70	66	65	63	57	72	69	71	66	64	62	54
	Cooling: Part Load	68	67	70	66	65	63	58	73	69	71	67	64	62	55
	Cooling: Full Load	68	68	70	67	66	64	58	73	70	71	67	65	62	56
	Heating: Part Load	68	67	70	66	65	64	58	73	69	71	67	64	62	55
	Heating: Full Load	69	68	71	66	66	65	59	73	70	71	67	65	62	56
TLV192	Fan Only	68	67	71	68	66	64	59	70	72	69	70	65	60	54
	Cooling: Part Load	69	68	71	68	67	65	59	71	72	69	71	66	61	54
	Cooling: Full Load	70	69	71	68	67	65	59	71	73	70	72	66	61	55
	Heating: Part Load	69	69	72	68	67	65	59	71	73	70	71	66	61	55
	Heating: Full Load	70	70	72	68	67	66	60	72	74	71	72	66	61	56
TLV240	Fan Only	70	69	72	69	67	66	60	72	73	70	72	66	61	55
	Cooling: Part Load	70	70	72	69	68	66	60	72	74	71	72	67	62	55
	Cooling: Full Load	71	70	72	69	69	66	60	73	74	71	73	67	62	56
	Heating: Part Load	71	70	73	69	68	67	61	73	74	71	72	67	62	56
	Heating: Full Load	72	71	74	69	68	68	61	74	75	72	73	67	62	57
TLV300	Fan Only	71	70	74	70	69	67	61	73	75	72	73	68	63	56
	Cooling: Part Load	72	71	74	70	69	67	61	74	75	72	74	68	63	57
	Cooling: Full Load	72	72	74	71	70	68	61	74	76	73	75	69	64	57
	Heating: Part Load	72	71	74	70	69	68	62	74	76	73	74	68	63	57
	Heating: Full Load	73	72	75	70	70	69	63	75	77	74	74	69	64	58

TLV Series (60 Hz) w/UltraQuiet Technology

Tested in accordance with AHRI 260

Octave Band Sound Power Level, (dB re 1pW)

Model	Mode	Ducted Discharge w/UltraQuiet Technology							Free Inlet & Case Radiated w/UltraQuiet Technology						
		Octave Band Frequency, Hz							Octave Band Frequency, Hz						
		125	250	500	1000	2000	4000	8000	125	250	500	1000	2000	4000	8000
TLV084	Fan Only	65	61	65	62	62	61	54	67	65	63	65	61	57	50
	Cooling: Full Load	66	62	65	63	63	61	55	68	66	64	66	62	58	51
	Heating: Full Load	67	63	66	62	63	63	56	69	67	65	66	62	58	52
TLV096	Fan Only	66	62	66	63	63	62	55	68	66	64	66	62	58	51
	Cooling: Full Load	67	63	66	64	64	63	56	69	67	65	67	63	59	52
	Heating: Full Load	68	64	67	64	64	64	57	70	68	66	67	63	59	53
TLV120	Fan Only	67	63	67	65	64	63	57	69	67	65	67	63	59	52
	Cooling: Full Load	69	65	67	65	65	64	57	70	68	66	69	64	60	53
	Heating: Full Load	69	65	68	65	65	65	58	71	69	67	69	64	60	54
TLV150	Fan Only	69	64	69	66	65	64	58	71	69	66	69	64	60	53
	Cooling: Full Load	70	66	69	66	67	65	58	72	70	68	70	65	61	54
	Heating: Full Load	71	66	70	66	66	66	59	73	71	69	70	65	61	55
TLV168	Fan Only	66	65	68	65	63	62	56	71	67	69	65	63	60	53
	Cooling: Part Load	66	66	68	65	64	62	56	71	68	69	65	63	61	54
	Cooling: Full Load	67	66	68	65	65	62	57	72	68	69	66	64	61	55
	Heating: Part Load	67	66	69	65	64	63	57	71	68	69	65	63	61	54
	Heating: Full Load	68	67	69	65	64	64	58	72	68	69	66	64	61	55
TLV192	Fan Only	67	66	70	66	65	63	57	69	70	68	69	64	59	53
	Cooling: Part Load	68	67	70	66	65	63	58	69	71	68	70	64	59	53
	Cooling: Full Load	68	68	70	67	66	64	58	70	71	69	70	65	60	54
	Heating: Part Load	68	67	70	66	65	64	58	70	71	69	70	64	59	54
	Heating: Full Load	69	68	71	66	66	65	59	71	72	70	70	65	60	55
TLV240	Fan Only	68	67	71	67	66	64	59	70	72	69	70	65	60	54
	Cooling: Part Load	69	68	71	68	67	65	59	71	72	69	71	65	61	54
	Cooling: Full Load	69	69	71	68	67	65	59	71	73	70	72	66	61	55
	Heating: Part Load	69	68	72	68	66	65	59	71	73	70	71	65	61	55
	Heating: Full Load	70	70	72	68	67	66	60	72	74	71	72	66	61	56
TLV300	Fan Only	69	69	72	69	67	65	60	72	73	70	72	66	61	55
	Cooling: Part Load	70	69	72	69	68	66	60	72	74	71	72	67	62	55
	Cooling: Full Load	71	70	72	69	69	66	60	73	74	71	73	67	62	56
	Heating: Part Load	71	70	73	69	68	67	61	73	74	71	72	67	62	56
	Heating: Full Load	72	71	73	69	68	68	61	74	75	72	73	67	62	57

TRC Series (60 Hz)

Tested in accordance with AHRI 350

Octave Band Sound Power Level, (dB re 1pW)

Model	Mode	Free Inlet							Free Inlet & Case Radiated						
		Octave Band Frequency, Hz							Octave Band Frequency, Hz						
		125	250	500	1000	2000	4000	8000	125	250	500	1000	2000	4000	8000
TRC09	Fan Only: Low Speed	47	46	43	40	35	28	30	55	45	41	38	33	27	31
	Fan Only: High Speed	50	50	48	43	40	33	32	55	52	49	46	43	35	34
	Cooling: Low Speed	56	58	44	41	36	29	30	55	66	43	43	35	29	35
	Cooling: High Speed	58	59	49	44	40	33	31	60	66	50	47	42	35	34
	Heating: Low Speed	51	54	44	40	36	27	29	58	56	43	43	35	33	34
	Heating: High Speed	54	53	48	44	39	32	31	56	61	49	47	42	36	35
TRC12	Fan Only: Low Speed	50	51	51	43	39	32	31	51	52	46	43	39	31	30
	Fan Only: High Speed	55	56	55	48	45	39	37	60	63	56	54	51	46	43
	Cooling: Low Speed	55	60	50	43	39	32	31	63	62	47	45	40	32	33
	Cooling: High Speed	56	58	55	49	45	39	37	65	65	56	54	51	46	43
	Heating: Low Speed	65	56	51	43	39	32	31	62	60	49	47	41	34	37
	Heating: High Speed	60	57	56	48	44	39	37	64	65	56	54	51	46	44
TRC15	Fan Only: Low Speed	53	52	55	46	40	32	31	54	55	56	48	44	37	34
	Fan Only: High Speed	58	57	56	51	45	39	36	61	63	58	55	52	47	45
	Cooling: Low Speed	62	54	48	43	36	30	30	56	58	56	48	45	37	34
	Cooling: High Speed	61	54	49	46	40	33	31	62	64	58	55	52	47	45
	Heating: Low Speed	61	56	47	44	35	34	32	59	58	56	48	44	37	34
	Heating: High Speed	60	56	50	47	40	36	33	64	63	58	54	52	46	45
TRC18	Fan Only: Low Speed	55	58	58	51	46	39	34	47	44	38	36	31	25	28
	Fan Only: High Speed	58	61	57	55	50	44	39	60	59	56	54	52	47	44
	Cooling: Low Speed	60	57	58	52	47	39	34	71	56	48	52	40	31	32
	Cooling: High Speed	62	62	57	55	50	44	39	69	61	57	54	52	47	44
	Heating: Low Speed	63	57	64	48	43	36	32	68	58	52	50	39	38	34
	Heating: High Speed	63	59	57	51	47	41	39	70	60	56	55	53	47	44

TRC Series (60 Hz) w/UltraQuiet Technology

Tested in accordance with AHRI 350

Octave Band Sound Power Level, (dB re 1pW)

Model	Mode	Free Inlet w/UltraQuiet Techology							Free Inlet & Case Radiated w/UltraQuiet Technology						
		Octave Band Frequency, Hz							Octave Band Frequency, Hz						
		125	250	500	1000	2000	4000	8000	125	250	500	1000	2000	4000	8000
TRC09	Fan Only: Low Speed	47	46	43	40	35	28	30	Data Not Available At This Time						
	Fan Only: High Speed	50	50	48	43	40	33	32							
	Cooling: Low Speed	53	55	42	39	34	28	29							
	Cooling: High Speed	55	56	47	42	38	31	29							
	Heating: Low Speed	48	51	42	38	34	26	28							
	Heating: High Speed	51	50	46	42	37	30	29							
TRC12	Fan Only: Low Speed	50	51	51	43	39	32	31	Data Not Available At This Time						
	Fan Only: High Speed	55	56	55	48	45	39	37							
	Cooling: Low Speed	52	57	48	41	37	30	30							
	Cooling: High Speed	53	55	52	46	42	37	35							
	Heating: Low Speed	62	53	48	41	37	31	29							
	Heating: High Speed	57	54	53	46	42	37	35							
TRC15	Fan Only: Low Speed	53	52	55	46	40	32	31	Data Not Available At This Time						
	Fan Only: High Speed	58	57	56	51	45	39	36							
	Cooling: Low Speed	59	51	45	41	34	28	28							
	Cooling: High Speed	58	52	46	44	38	31	29							
	Heating: Low Speed	58	53	45	42	33	33	30							
	Heating: High Speed	57	53	47	45	38	34	31							
TRC18	Fan Only: Low Speed	55	58	58	51	46	39	34	Data Not Available At This Time						
	Fan Only: High Speed	58	61	57	55	50	44	39							
	Cooling: Low Speed	57	54	55	49	44	37	32							
	Cooling: High Speed	59	59	54	52	48	42	37							
	Heating: Low Speed	60	54	61	46	41	34	30							
	Heating: High Speed	60	56	54	48	45	39	37							

TMW Series (60 Hz)

Tested in accordance with AHRI 260

Octave Band Sound Power Level, (dB re 1pW)

		Case Radiated						
Model	Mode	Octave Band Frequency, Hz						
		125	250	500	1000	2000	4000	8000
TMW036	Cooling	57	53	51	49	43	38	39
	Heating	57	49	50	51	45	40	40
TMW060	Cooling	62	54	53	52	47	45	38
	Heating	59	55	53	54	48	40	38
TMW120	Cooling	63	56	55	55	53	43	39
	Heating	62	58	57	55	51	41	39
TMW170	Cooling	67	66	62	56	56	47	44
	Heating	66	63	60	56	59	46	42
TMW340	Cooling	67	65	65	59	57	50	45
	Heating	65	62	68	57	54	49	47

TS Series (50 Hz) w/UltraQuiet Technology

Tested in accordance with AHRI 260

Octave Band Sound Power Level, (dB re 1pW)

Model	Mode	Ducted Discharge w/Ultraquiet Technology							Ducted Discharge w/UltraQuiet Technology						
		Octave Band Frequency, Hz							Octave Band Frequency, Hz						
		125	250	500	1000	2000	4000	8000	125	250	500	1000	2000	4000	8000
TS006	Fan Only: Low Speed	47	38	32	29	25	24	27	47	38	32	29	25	24	27
	Fan Only: High Speed	54	46	38	36	33	31	27	54	46	38	36	33	31	27
	Cooling: Low Speed	43	37	30	26	22	23	26	43	37	30	26	22	23	26
	Cooling: High Speed	51	43	36	34	31	29	27	51	43	36	34	31	29	27
	Heating: Low Speed	45	40	32	30	26	24	26	45	40	32	30	26	24	26
	Heating: High Speed	51	45	36	35	32	30	26	51	45	36	35	32	30	26
TS009	Fan Only: Low Speed	50	46	42	37	35	33	30	50	46	42	37	35	33	30
	Fan Only: High Speed	54	46	43	40	37	35	31	54	46	43	40	37	35	31
	Cooling: Low Speed	50	46	38	36	33	31	28	50	46	38	36	33	31	28
	Cooling: High Speed	54	46	41	39	35	35	31	54	46	41	39	35	35	31
	Heating: Low Speed	47	46	39	36	33	31	28	47	46	39	36	33	31	28
	Heating: High Speed	53	47	40	38	36	34	29	53	47	40	38	36	34	29
TS012	Fan Only: Low Speed	54	48	45	42	39	37	35	54	48	45	42	39	37	35
	Fan Only: High Speed	57	50	45	45	43	40	37	57	50	45	45	43	40	37
	Cooling: Low Speed	53	48	41	39	37	35	32	53	48	41	39	37	35	32
	Cooling: High Speed	56	50	43	44	41	40	37	56	50	43	44	41	40	37
	Heating: Low Speed	49	48	40	40	38	36	33	49	48	40	40	38	36	33
	Heating: High Speed	55	50	43	44	41	40	36	55	50	43	44	41	40	36
TS018	Fan Only: Low Speed	43	47	44	42	38	37	30	43	47	44	42	38	37	30
	Fan Only: High Speed	46	47	51	43	41	40	33	46	47	51	43	41	40	33
	Cooling: Low Speed	41	42	41	42	39	38	30	41	42	41	42	39	38	30
	Cooling: High Speed	44	44	50	43	39	38	29	44	44	50	43	39	38	29
	Heating: Low Speed	42	42	43	42	38	36	28	42	42	43	42	38	36	28
	Heating: High Speed	44	46	51	44	39	38	31	44	46	51	44	39	38	31
TS024	Fan Only: Low Speed	46	51	50	47	43	43	36	46	51	50	47	43	43	36
	Fan Only: High Speed	50	52	54	48	45	44	38	50	52	54	48	45	44	38
	Cooling: Low Speed	43	45	50	47	44	43	37	43	45	50	47	44	43	37
	Cooling: High Speed	48	48	54	47	44	42	35	48	48	54	47	44	42	35
	Heating: Low Speed	46	46	48	47	42	41	34	46	46	48	47	42	41	34
	Heating: High Speed	48	49	54	49	44	42	36	48	49	54	49	44	42	36
TS030	Fan Only: Low Speed	51	55	56	52	49	48	42	51	55	56	52	49	48	42
	Fan Only: High Speed	55	56	57	52	49	48	42	55	56	57	52	49	48	42
	Cooling: Low Speed	47	49	58	52	48	47	43	47	49	58	52	48	47	43
	Cooling: High Speed	52	53	57	52	48	47	39	52	53	57	52	48	47	39
	Heating: Low Speed	50	49	53	52	47	46	40	50	49	53	52	47	46	40
	Heating: High Speed	53	53	57	53	47	45	40	53	53	57	53	47	45	40
TS036	Fan Only: Low Speed	51	51	51	48	43	41	33	51	51	51	48	43	41	33
	Fan Only: High Speed	63	58	56	54	50	48	40	63	58	56	54	50	48	40
	Cooling: Low Speed	49	46	51	49	45	42	36	49	46	51	49	45	42	36
	Cooling: High Speed	60	55	56	54	49	47	39	60	55	56	54	49	47	39
	Heating: Low Speed	50	47	48	48	43	40	34	50	47	48	48	43	40	34
	Heating: High Speed	61	56	57	55	48	45	38	61	56	57	55	48	45	38
TS042	Fan Only: Low Speed	53	53	53	50	45	44	36	53	53	53	50	45	44	36
	Fan Only: High Speed	63	59	57	55	51	50	42	63	59	57	55	51	50	42
	Cooling: Low Speed	51	48	62	50	47	45	39	51	48	62	50	47	45	39
	Cooling: High Speed	60	56	57	55	50	48	40	60	56	57	55	50	48	40
	Heating: Low Speed	52	48	49	50	44	41	35	52	48	49	50	44	41	35
	Heating: High Speed	61	57	58	55	47	46	39	61	57	58	55	47	46	39

Table Continued On Next Page

TS Series (50 Hz) w/UltraQuiet Technology

Tested in accordance with AHRI 260

Octave Band Sound Power Level, (dB re 1pW)

Table Continued From Previous Page

Model	Mode	Ducted Discharge w/Ultraquiet Technology							Ducted Discharge w/UltraQuiet Technology						
		Octave Band Frequency, Hz							Octave Band Frequency, Hz						
		125	250	500	1000	2000	4000	8000	125	250	500	1000	2000	4000	8000
TS048	Fan Only: Low Speed	57	56	55	52	48	46	39	57	56	55	52	48	46	39
	Fan Only: High Speed	64	61	58	56	52	51	45	64	61	58	56	52	51	45
	Cooling: Low Speed	52	49	54	52	48	47	43	52	49	54	52	48	47	43
	Cooling: High Speed	61	57	58	55	51	50	42	61	57	58	55	51	50	42
	Heating: Low Speed	53	50	50	51	46	44	36	53	50	50	51	46	44	36
	Heating: High Speed	61	57	59	56	50	48	41	61	57	59	56	50	48	41
TS060	Fan Only: Low Speed	62	68	61	61	56	55	50	62	68	61	61	56	55	50
	Fan Only: High Speed	65	61	58	57	54	53	47	65	61	58	57	54	53	47
	Cooling: Low Speed	57	62	62	61	56	56	53	57	62	62	61	56	56	53
	Cooling: High Speed	63	58	58	57	52	51	44	63	58	58	57	52	51	44
	Heating: Low Speed	60	58	57	61	54	52	46	60	58	57	61	54	52	46
	Heating: High Speed	62	58	58	58	52	50	44	62	58	58	58	52	50	44
TS070	Fan Only: Low Speed	73	75	65	67	62	61	55	73	75	65	67	62	61	55
	Fan Only: High Speed	71	67	62	63	59	57	50	71	67	62	63	59	57	50
	Cooling: Low Speed	66	77	63	68	67	70	62	66	77	63	68	67	70	62
	Cooling: High Speed	69	65	61	62	55	52	47	69	65	61	62	55	52	47
	Heating: Low Speed	67	71	67	68	62	60	53	67	71	67	68	62	60	53
	Heating: High Speed	68	65	61	62	59	56	50	68	65	61	62	59	56	50

TC Series (50 Hz)

Tested in accordance with AHRI 260

Octave Band Sound Power Level, (dB re 1pW)

Model	Mode	Ducted Discharge							Case Radiated						
		Octave Band Frequency, Hz							Octave Band Frequency, Hz						
		125	250	500	1000	2000	4000	8000	125	250	500	1000	2000	4000	8000
TC006	Fan Only: Low Speed	60	49	42	38	36	33	32	57	46	43	38	32	29	34
	Fan Only: High Speed	64	56	47	45	42	40	36	61	54	50	46	40	35	35
	Cooling: Low Speed	63	49	42	39	36	33	32	60	51	46	43	33	34	34
	Cooling: High Speed	66	56	47	45	42	41	36	63	56	51	47	40	36	35
	Heating: Low Speed	62	50	43	39	37	34	33	60	52	46	42	34	32	33
	Heating: High Speed	65	56	47	44	42	40	35	61	58	53	48	41	38	34
TC009	Fan Only: Low Speed	68	62	54	53	50	50	46	62	57	54	50	45	41	37
	Fan Only: High Speed	67	62	54	53	50	50	46	64	60	57	53	47	43	39
	Cooling: Low Speed	66	61	53	53	50	50	46	63	59	55	51	45	41	38
	Cooling: High Speed	68	63	55	54	51	51	47	64	60	57	53	47	44	40
	Heating: Low Speed	66	60	53	52	50	49	45	63	59	56	51	47	41	37
	Heating: High Speed	68	63	55	53	51	51	47	64	61	57	53	47	43	39
TC012	Fan Only: Low Speed	67	58	53	51	48	46	41	60	54	49	48	42	37	34
	Fan Only: High Speed	67	62	55	53	50	49	45	63	58	53	53	46	42	37
	Cooling: Low Speed	65	57	53	51	47	45	41	62	57	51	48	42	38	41
	Cooling: High Speed	68	62	55	54	50	50	46	66	61	53	53	47	42	41
	Heating: Low Speed	66	58	53	51	48	46	41	65	57	52	49	43	39	40
	Heating: High Speed	69	62	54	52	50	49	44	66	59	54	53	46	42	40
TC015	Fan Only: Low Speed	63	56	50	51	47	45	39	58	52	50	47	41	37	35
	Fan Only: High Speed	69	57	52	54	49	49	43	65	57	53	51	48	43	38
	Cooling: Low Speed	67	57	50	51	47	46	39	66	60	54	50	45	40	36
	Cooling: High Speed	69	57	52	53	50	49	43	66	61	56	55	48	45	37
	Heating: Low Speed	66	57	50	51	47	45	39	66	60	56	52	47	43	36
	Heating: High Speed	69	57	52	54	49	48	43	66	62	57	55	50	44	37
TC018	Fan Only: Low Speed	62	56	54	51	50	47	40	59	52	49	47	42	37	36
	Fan Only: High Speed	70	58	54	53	53	49	43	64	57	54	52	48	43	37
	Cooling: Low Speed	67	57	53	50	50	46	40	66	59	55	51	45	41	36
	Cooling: High Speed	70	58	53	53	53	50	44	66	61	57	56	50	46	38
	Heating: Low Speed	67	57	54	50	50	47	40	66	59	55	52	46	43	38
	Heating: High Speed	70	58	54	53	53	49	43	66	61	57	56	50	45	37
TC024	Fan Only: Low Speed	60	53	54	52	51	51	43	62	59	56	52	49	44	35
	Fan Only: High Speed	68	57	54	56	53	54	47	67	62	57	55	52	47	37
	Cooling: Low Speed	67	53	53	52	51	50	43	65	59	56	54	48	44	36
	Cooling: High Speed	70	57	54	56	54	54	47	68	63	58	56	52	47	38
	Heating: Low Speed	66	54	55	53	51	51	44	68	60	56	53	49	44	37
	Heating: High Speed	68	57	55	56	53	54	47	69	64	58	56	51	46	41
TC030	Fan Only: Low Speed	68	59	60	58	59	57	51	65	59	58	55	53	49	41
	Fan Only: High Speed	72	61	59	59	59	57	51	67	61	59	57	54	50	42
	Cooling: Low Speed	68	59	59	58	58	56	50	65	60	58	56	53	49	41
	Cooling: High Speed	71	61	59	59	59	57	50	68	62	59	57	54	51	42
	Heating: Low Speed	70	59	61	58	58	57	50	70	60	58	56	53	49	42
	Heating: High Speed	73	60	59	58	59	57	50	71	62	59	57	54	50	42
TC036	Fan Only: Low Speed	64	57	59	57	56	56	48	64	58	57	55	53	48	42
	Fan Only: High Speed	71	63	60	62	60	59	53	68	64	60	59	58	54	46
	Cooling: Low Speed	66	56	58	56	55	55	47	68	59	58	56	53	49	42
	Cooling: High Speed	74	63	60	62	60	59	54	72	64	61	59	58	54	47
	Heating: Low Speed	71	60	59	57	56	56	49	73	61	58	56	53	50	42
	Heating: High Speed	74	63	60	62	59	58	52	74	65	60	59	57	54	46

Table Continued On Next Page

TC Series (50 Hz)

Tested in accordance with AHRI 260

Octave Band Sound Power Level, (dB re 1pW)

Table Continued From Previous Page

Model	Mode	Ducted Discharge							Case Radiated						
		Octave Band Frequency, Hz							Octave Band Frequency, Hz						
		125	250	500	1000	2000	4000	8000	125	250	500	1000	2000	4000	8000
TC042	Fan Only: Low Speed	68	61	62	60	59	60	53	61	58	58	55	52	47	40
	Fan Only: High Speed	73	68	61	64	61	61	56	69	64	62	60	58	55	47
	Cooling: Low Speed	67	60	61	59	59	59	52	71	61	58	55	52	48	41
	Cooling: High Speed	73	67	61	64	62	61	57	75	67	62	61	58	55	48
	Heating: Low Speed	70	62	62	60	59	60	53	73	63	58	55	53	49	43
	Heating: High Speed	77	67	61	64	61	61	55	77	69	61	60	57	55	47
TC048	Fan Only: Low Speed	72	69	66	63	62	61	52	65	59	57	56	52	46	42
	Fan Only: High Speed	74	71	67	65	64	63	55	71	69	64	61	58	54	46
	Cooling: Low Speed	69	67	66	62	62	60	52	71	67	63	59	56	51	44
	Cooling: High Speed	75	71	68	65	64	63	55	75	68	63	62	59	55	47
	Heating: Low Speed	71	67	66	63	62	60	52	74	67	61	59	55	52	44
	Heating: High Speed	74	71	67	64	64	63	55	76	70	65	63	59	55	47
TC060	Fan Only: Low Speed	72	64	64	63	63	63	57	72	64	62	58	55	52	45
	Fan Only: High Speed	78	71	66	69	66	66	60	76	70	65	63	59	57	50
	Cooling: Low Speed	73	63	64	62	62	62	56	72	64	61	58	54	51	44
	Cooling: High Speed	78	70	65	68	66	65	60	73	69	64	63	60	56	49
	Heating: Low Speed	73	64	64	64	63	63	57	74	65	62	58	55	50	43
	Heating: High Speed	78	70	65	69	66	65	60	75	70	65	63	58	55	49

TC Series (50 Hz) w/UltraQuiet Technology

Tested in accordance with AHRI 260

Octave Band Sound Power Level, (dB re 1pW)

Model	Mode	Ducted Discharge w/UltraQuiet Technology							Case Radiated w/UltraQuiet Technology						
		Octave Band Frequency, Hz							Octave Band Frequency, Hz						
		125	250	500	1000	2000	4000	8000	125	250	500	1000	2000	4000	8000
TC006	Fan Only: Low Speed	59	48	42	38	36	33	32	57	46	43	38	31	29	34
	Fan Only: High Speed	64	55	47	44	42	40	36	60	54	49	45	39	34	35
	Cooling: Low Speed	62	49	42	38	36	33	32	60	50	45	42	33	33	33
	Cooling: High Speed	65	55	47	44	42	41	36	62	56	50	47	39	35	35
	Heating: Low Speed	62	49	43	38	37	34	33	60	51	45	41	33	32	36
	Heating: High Speed	64	55	47	44	42	40	36	60	57	53	47	40	37	33
TC009	Fan Only: Low Speed	68	61	54	52	50	50	46	62	57	54	50	44	40	37
	Fan Only: High Speed	67	62	54	52	50	50	47	63	60	57	52	46	42	39
	Cooling: Low Speed	66	60	53	52	50	49	46	63	59	55	50	45	40	37
	Cooling: High Speed	67	62	55	53	51	51	47	63	60	56	53	47	43	40
	Heating: Low Speed	65	60	53	52	50	49	45	63	59	55	51	46	40	40
	Heating: High Speed	67	62	55	52	51	50	47	64	61	56	52	46	42	37
TC012	Fan Only: Low Speed	66	57	53	50	48	46	41	60	53	48	47	41	37	34
	Fan Only: High Speed	67	61	55	52	50	49	45	62	58	52	52	46	41	37
	Cooling: Low Speed	64	57	53	50	47	45	41	62	56	50	47	41	37	41
	Cooling: High Speed	67	61	55	53	51	50	46	65	60	53	53	46	42	41
	Heating: Low Speed	66	57	53	50	48	46	41	65	56	51	48	42	38	42
	Heating: High Speed	68	61	55	51	50	49	44	66	59	53	52	45	41	38
TC015	Fan Only: Low Speed	60	54	50	50	47	45	39	55	49	47	45	39	36	35
	Fan Only: High Speed	67	55	52	53	50	49	43	64	57	52	50	47	43	38
	Cooling: Low Speed	63	55	50	50	47	46	39	66	57	52	46	43	38	35
	Cooling: High Speed	66	54	52	53	50	49	44	65	59	55	53	47	45	37
	Heating: Low Speed	63	54	51	50	47	45	39	66	58	55	49	45	42	38
	Heating: High Speed	65	55	53	53	49	48	43	64	60	56	53	49	43	36
TC018	Fan Only: Low Speed	59	55	53	50	51	47	40	56	49	46	45	40	36	36
	Fan Only: High Speed	67	55	54	52	53	49	43	63	57	53	51	47	43	37
	Cooling: Low Speed	64	54	53	49	50	46	40	66	56	53	47	43	39	35
	Cooling: High Speed	67	55	53	52	53	50	44	65	59	56	54	49	46	38
	Heating: Low Speed	63	55	54	50	51	47	40	66	57	54	49	44	42	40
	Heating: High Speed	66	55	54	52	53	49	43	64	59	56	54	49	44	36
TC024	Fan Only: Low Speed	57	51	54	51	51	51	43	59	56	53	50	47	43	35
	Fan Only: High Speed	65	55	54	55	54	54	47	66	62	56	54	51	47	37
	Cooling: Low Speed	64	50	53	51	51	50	43	65	56	54	50	46	42	35
	Cooling: High Speed	67	54	54	55	54	54	48	67	61	57	54	51	47	38
	Heating: Low Speed	62	51	55	52	51	51	44	68	58	55	50	47	43	39
	Heating: High Speed	64	55	55	55	53	53	47	67	62	57	54	50	45	40
TC030	Fan Only: Low Speed	65	57	60	57	59	57	51	62	56	55	53	51	48	41
	Fan Only: High Speed	69	58	59	58	59	57	51	66	61	58	56	53	50	42
	Cooling: Low Speed	64	56	59	57	58	56	49	65	57	56	52	51	47	40
	Cooling: High Speed	68	58	59	58	60	57	51	67	60	58	55	53	51	42
	Heating: Low Speed	66	57	61	57	58	57	51	70	58	57	53	51	48	44
	Heating: High Speed	69	58	60	57	59	57	50	69	60	58	55	53	49	41
TC036	Fan Only: Low Speed	61	55	59	56	56	56	49	62	57	55	53	52	47	41
	Fan Only: High Speed	69	61	60	62	60	59	54	67	63	58	57	57	53	45
	Cooling: Low Speed	62	54	58	55	55	55	47	66	56	56	54	52	48	42
	Cooling: High Speed	71	60	60	62	60	59	54	70	63	59	57	57	53	46
	Heating: Low Speed	67	57	59	57	56	56	49	70	59	55	53	52	49	41
	Heating: High Speed	70	60	60	61	59	58	53	71	64	58	56	56	53	44

Table Continued On Next Page

TC Series (50 Hz) w/UltraQuiet Technology

Tested in accordance with AHRI 260

Octave Band Sound Power Level, (dB re 1pW)

Table Continued From Previous Page

Model	Mode	Ducted Discharge w/UltraQuiet Technology							Case Radiated w/UltraQuiet Technology						
		Octave Band Frequency, Hz							Octave Band Frequency, Hz						
		125	250	500	1000	2000	4000	8000	125	250	500	1000	2000	4000	8000
TC042	Fan Only: Low Speed	65	59	62	59	59	60	53	59	57	56	53	51	46	39
	Fan Only: High Speed	71	65	61	64	61	61	56	68	63	60	58	57	54	46
	Cooling: Low Speed	63	57	61	58	58	59	52	69	58	56	53	51	47	41
	Cooling: High Speed	70	64	61	64	62	61	57	73	66	60	59	57	54	47
	Heating: Low Speed	67	59	62	60	59	60	53	70	61	55	52	52	48	42
	Heating: High Speed	73	65	61	63	61	61	56	74	68	59	57	56	54	45
TC048	Fan Only: Low Speed	69	67	66	62	62	61	52	63	58	55	54	51	45	41
	Fan Only: High Speed	71	69	68	64	64	63	55	70	68	62	59	57	53	45
	Cooling: Low Speed	66	65	65	61	62	60	52	69	64	61	57	55	50	44
	Cooling: High Speed	72	68	68	65	64	63	55	73	67	61	60	58	54	46
	Heating: Low Speed	67	64	66	62	62	60	52	71	65	58	56	54	51	43
	Heating: High Speed	70	69	68	63	64	63	55	73	69	63	60	58	54	45
TC060	Fan Only: Low Speed	69	62	64	63	63	63	57	70	63	60	56	54	51	44
	Fan Only: High Speed	75	68	66	68	66	66	61	75	69	63	61	58	56	49
	Cooling: Low Speed	69	60	64	61	62	62	56	70	61	59	56	53	50	44
	Cooling: High Speed	74	67	65	67	66	65	60	71	68	62	61	59	55	48
	Heating: Low Speed	70	61	64	63	63	63	57	71	63	59	55	54	49	42
	Heating: High Speed	74	68	66	68	66	65	60	72	69	63	60	57	54	47

TC_L Series (50 Hz)

Tested in accordance with AHRI 260

Octave Band Sound Power Level, (dB re 1pW)

Model	Mode	Ducted Discharge							Free Inlet & Case Radiated						
		Octave Band Frequency, Hz							Octave Band Frequency, Hz						
		125	250	500	1000	2000	4000	8000	125	250	500	1000	2000	4000	8000
TC_L072	Fan Only	68	58	65	57	56	56	47	71	67	68	62	58	54	43
	Cooling: Part Load	69	59	66	57	56	56	48	68	67	68	63	59	54	43
	Cooling: Full Load	70	60	67	58	57	57	48	70	68	69	63	59	55	44
	Heating: Part Load	69	59	66	57	56	56	47	68	67	68	63	59	54	43
	Heating: Full Load	70	60	67	58	57	57	47	70	68	69	63	59	55	44
TC_L096	Fan Only	72	64	71	65	64	63	52	73	71	71	64	61	59	48
	Cooling: Part Load	73	64	71	65	64	63	52	69	71	71	65	62	60	48
	Cooling: Full Load	74	65	72	66	65	64	53	70	72	72	65	62	60	49
	Heating: Part Load	73	64	71	65	64	63	52	70	71	71	65	62	60	48
	Heating: Full Load	74	65	72	66	65	64	53	71	72	72	65	62	60	49
TC_L120	Fan Only	72	66	71	69	66	66	57	73	73	71	66	63	63	54
	Cooling: Part Load	73	67	72	70	67	67	57	69	74	71	67	65	64	56
	Cooling: Full Load	74	68	73	71	68	68	58	70	75	72	68	66	65	57
	Heating: Part Load	73	67	72	70	67	67	57	70	74	71	67	65	64	56
	Heating: Full Load	74	68	73	71	68	68	58	71	75	72	68	66	65	57
TC_L160	Fan Only	73	69	72	69	69	67	58	75	72	70	70	66	64	55
	Cooling: Part Load	73	69	72	69	69	67	58	76	72	69	68	66	65	56
	Cooling: Full Load	73	69	73	69	69	67	58	76	72	69	68	66	65	56
	Heating: Part Load	73	69	72	69	69	67	58	75	72	70	68	66	65	57
	Heating: Full Load	73	69	72	69	68	67	58	75	73	70	68	66	65	57
TC_L192	Fan Only	71	71	74	68	68	65	56	76	72	70	68	65	64	56
	Cooling: Part Load	71	71	74	68	68	65	57	76	72	70	68	65	64	56
	Cooling: Full Load	72	71	74	69	69	66	58	77	72	71	68	66	65	57
	Heating: Part Load	71	69	74	67	66	63	54	76	71	69	67	65	63	55
	Heating: Full Load	72	69	74	67	66	64	54	76	71	69	67	65	63	55
TC_L240	Fan Only	75	75	77	74	74	73	65	80	76	72	71	70	68	60
	Cooling: Part Load	75	75	77	74	74	73	66	80	76	72	71	70	69	61
	Cooling: Full Load	76	75	78	74	74	73	66	80	76	73	72	70	69	61
	Heating: Part Load	75	75	77	74	73	73	65	79	76	72	71	70	69	61
	Heating: Full Load	76	75	77	74	73	73	65	80	76	73	71	70	69	61
TC_L300	Fan Only	79	73	72	70	67	64	56	82	77	72	71	68	66	58
	Cooling: Part Load	80	73	72	70	68	64	57	82	77	72	71	69	66	61
	Cooling: Full Load	80	73	72	70	68	64	57	83	77	72	73	69	66	61
	Heating: Part Load	80	74	73	71	67	64	57	83	77	72	71	69	67	58
	Heating: Full Load	80	74	74	71	67	64	57	84	77	72	71	69	67	58

TC_L Series (50 Hz) w/UltraQuiet Technology

Tested in accordance with AHRI 260

Octave Band Sound Power Level, (dB re 1pW)

Model	Mode	Ducted Discharge w/UltraQuiet Techology							Free Inlet & Case Radiated w/UltraQuiet Technology						
		Octave Band Frequency, Hz							Octave Band Frequency, Hz						
		125	250	500	1000	2000	4000	8000	125	250	500	1000	2000	4000	8000
TC_L072	Fan Only	67	55	62	52	52	54	43	70	65	67	61	56	53	41
	Cooling: Part Load	68	56	63	52	52	54	44	67	65	67	62	57	53	41
	Cooling: Full Load	69	57	64	53	53	55	44	69	66	68	62	57	54	42
	Heating: Part Load	68	56	63	52	52	54	43	68	65	67	62	57	53	41
	Heating: Full Load	69	57	64	53	53	55	44	69	66	68	62	57	54	43
TC_L096	Fan Only	71	61	67	59	58	61	48	72	69	70	63	58	58	46
	Cooling: Part Load	72	61	67	59	58	61	48	68	69	70	64	59	59	46
	Cooling: Full Load	73	62	68	60	59	62	49	69	70	71	64	60	59	47
	Heating: Part Load	72	61	67	59	58	61	48	69	69	70	64	59	59	46
	Heating: Full Load	73	62	68	60	59	62	49	70	70	71	64	60	59	48
TC_L120	Fan Only	71	63	68	63	61	64	53	72	71	70	65	61	61	51
	Cooling: Part Load	72	64	69	64	62	65	53	68	72	70	66	63	62	53
	Cooling: Full Load	73	65	70	65	63	66	54	69	73	71	67	64	63	54
	Heating: Part Load	72	64	69	64	62	65	53	69	72	70	66	63	62	53
	Heating: Full Load	73	65	70	65	63	66	54	70	73	71	67	64	63	55
TC_L160	Fan Only	72	68	71	68	68	66	57	74	71	69	69	65	63	54
	Cooling: Part Load	71	68	71	68	68	66	56	75	71	68	67	65	64	55
	Cooling: Full Load	71	68	72	68	68	66	56	75	71	68	67	65	64	55
	Heating: Part Load	72	68	71	68	68	66	56	74	71	69	67	65	64	56
	Heating: Full Load	72	68	71	68	67	65	56	74	72	69	67	65	64	56
TC_L192	Fan Only	70	69	73	67	67	64	55	75	71	69	67	64	63	55
	Cooling: Part Load	70	69	73	67	67	64	55	75	71	69	66	64	63	55
	Cooling: Full Load	71	70	73	68	68	65	57	76	71	70	66	65	63	56
	Heating: Part Load	70	68	72	66	65	62	53	75	70	68	65	64	62	54
	Heating: Full Load	71	68	73	66	65	63	53	75	70	68	65	64	62	53
TC_L240	Fan Only	74	74	76	73	72	72	64	79	75	71	70	69	66	59
	Cooling: Part Load	74	73	76	73	73	72	65	79	75	71	70	69	65	60
	Cooling: Full Load	75	74	77	73	73	72	65	79	75	71	70	69	65	59
	Heating: Part Load	73	74	76	73	72	71	64	78	75	71	69	69	66	59
	Heating: Full Load	75	74	76	73	72	72	63	79	75	72	69	69	66	60
TC_L300	Fan Only	78	72	71	68	66	63	55	81	75	71	70	67	65	57
	Cooling: Part Load	78	72	71	69	66	63	56	81	76	71	70	68	65	60
	Cooling: Full Load	79	72	71	69	67	63	56	82	76	71	70	68	65	60
	Heating: Part Load	79	72	72	70	66	63	56	83	76	71	70	68	66	57
	Heating: Full Load	79	73	73	70	66	63	56	84	76	71	69	68	66	57

TLV Series (50 Hz)

Tested in accordance with AHRI 260

Octave Band Sound Power Level, (dB re 1pW)

Model	Mode	Ducted Discharge							Free Inlet & Case Radiated						
		Octave Band Frequency, Hz							Octave Band Frequency, Hz						
		125	250	500	1000	2000	4000	8000	125	250	500	1000	2000	4000	8000
TL084	Fan Only	63	59	61	59	59	58	50	65	62	60	62	57	53	46
	Cooling: Full Load	64	60	61	59	60	59	50	66	63	61	63	58	54	47
	Heating: Full Load	65	60	62	59	60	60	52	66	64	62	63	58	54	48
TL096	Fan Only	64	60	63	60	60	59	51	66	64	62	63	59	54	47
	Cooling: Full Load	65	61	63	60	61	60	51	67	65	63	64	59	55	48
	Heating: Full Load	66	62	64	60	61	61	53	68	66	63	64	59	55	49
TL120	Fan Only	65	61	64	61	61	61	52	67	65	63	64	60	56	48
	Cooling: Full Load	67	62	64	61	62	61	52	68	66	64	66	61	57	49
	Heating: Full Load	67	63	65	61	62	63	54	69	67	65	66	61	57	50
TL150	Fan Only	67	62	65	62	62	62	53	68	66	64	66	61	57	49
	Cooling: Full Load	68	63	65	63	63	62	53	69	67	65	67	62	58	50
	Heating: Full Load	69	64	66	62	63	64	55	70	68	66	67	62	58	51
TL168	Fan Only	64	62	65	61	60	59	52	68	65	67	62	59	57	49
	Cooling: Part Load	64	63	65	61	61	60	52	69	65	67	63	60	57	50
	Cooling: Full Load	65	64	65	62	62	60	52	69	66	67	63	60	57	51
	Heating: Part Load	65	63	65	61	61	60	53	69	65	67	63	60	57	50
	Heating: Full Load	66	64	66	61	61	61	53	69	66	67	63	60	57	51
TL192	Fan Only	65	64	66	62	62	60	53	67	68	65	66	60	55	49
	Cooling: Part Load	65	64	66	63	62	61	53	67	68	65	67	61	56	49
	Cooling: Full Load	66	65	66	63	63	61	53	68	69	66	67	61	56	50
	Heating: Part Load	66	65	67	62	62	61	54	68	69	66	67	61	56	50
	Heating: Full Load	67	66	67	62	62	62	54	69	70	67	67	61	56	51
TL240	Fan Only	66	65	67	64	63	62	54	68	69	66	67	61	56	50
	Cooling: Part Load	67	66	67	64	63	62	54	69	70	67	68	62	57	50
	Cooling: Full Load	67	66	67	64	64	62	54	69	70	67	68	62	57	51
	Heating: Part Load	67	66	68	64	63	63	55	69	70	67	68	62	57	51
	Heating: Full Load	68	67	69	64	64	64	55	70	71	68	68	62	57	52
TL300	Fan Only	67	66	69	65	64	63	55	69	71	68	69	63	58	51
	Cooling: Part Load	68	67	69	65	65	63	55	70	71	68	69	63	58	51
	Cooling: Full Load	69	68	69	65	65	64	55	70	72	69	70	64	59	52
	Heating: Part Load	68	67	69	65	64	64	56	70	72	69	69	63	58	52
	Heating: Full Load	69	68	70	65	65	65	57	71	73	70	70	64	59	53

TLV Series (50 Hz) w/UltraQuiet Technology

Tested in accordance with AHRI 260

Octave Band Sound Power Level, (dB re 1pW)

Model	Mode	Ducted Discharge w/UltraQuiet Technology							Free Inlet & Case Radiated w/UltraQuiet Technology						
		Octave Band Frequency, Hz							Octave Band Frequency, Hz						
		125	250	500	1000	2000	4000	8000	125	250	500	1000	2000	4000	8000
TL084	Fan Only	61	57	60	57	58	57	49	63	61	59	61	56	52	45
	Cooling: Full Load	63	59	60	58	59	58	49	64	62	60	62	57	53	46
	Heating: Full Load	63	59	61	58	58	59	50	65	63	61	62	57	53	47
TL096	Fan Only	63	58	61	59	59	58	50	65	62	60	62	57	53	46
	Cooling: Full Load	64	60	61	59	60	59	50	66	63	61	63	58	54	47
	Heating: Full Load	65	60	62	59	60	60	51	66	64	62	63	58	54	48
TL120	Fan Only	64	60	63	60	60	59	51	66	64	61	63	59	54	47
	Cooling: Full Load	65	61	63	60	61	60	51	67	65	62	64	59	55	48
	Heating: Full Load	66	62	64	60	61	61	53	68	66	63	64	59	55	49
TL150	Fan Only	65	61	64	61	61	61	52	67	65	63	64	60	55	48
	Cooling: Full Load	66	62	64	61	62	61	52	68	66	64	66	61	56	49
	Heating: Full Load	67	63	65	61	62	62	54	69	67	65	65	61	56	50
TL168	Fan Only	62	61	64	60	59	58	51	67	64	65	61	58	56	48
	Cooling: Part Load	63	62	64	60	60	58	51	68	64	65	61	58	56	49
	Cooling: Full Load	64	63	64	60	60	59	51	68	64	65	62	59	56	50
	Heating: Part Load	63	62	64	60	60	59	52	68	64	65	61	58	56	49
	Heating: Full Load	64	63	65	60	60	60	52	68	64	65	62	59	56	50
TL192	Fan Only	64	62	65	61	60	59	52	65	67	64	65	59	54	48
	Cooling: Part Load	64	63	65	61	61	60	52	66	67	64	65	59	55	48
	Cooling: Full Load	65	64	65	62	61	60	52	66	68	65	66	60	55	49
	Heating: Part Load	65	63	65	61	61	60	53	66	68	65	65	59	55	49
	Heating: Full Load	66	64	66	61	61	61	53	67	69	66	66	60	55	50
TL240	Fan Only	65	64	66	62	62	60	53	67	68	65	66	60	55	49
	Cooling: Part Load	65	64	66	63	62	61	53	67	68	65	67	61	56	49
	Cooling: Full Load	66	65	66	63	63	61	53	68	69	66	67	61	56	50
	Heating: Part Load	66	65	67	62	62	61	54	68	69	66	66	61	56	50
	Heating: Full Load	67	66	67	62	62	62	54	69	70	67	67	61	56	51
TL300	Fan Only	66	65	67	64	63	62	54	68	69	66	67	61	56	50
	Cooling: Part Load	67	66	67	64	63	62	54	69	70	67	68	62	57	50
	Cooling: Full Load	67	66	67	64	64	62	54	69	70	67	68	62	57	51
	Heating: Part Load	67	66	68	64	63	63	55	69	70	67	68	62	57	51
	Heating: Full Load	68	67	68	64	64	63	55	70	71	68	68	62	57	52

TRC Series (50 Hz) w/UltraQuiet Technology

Tested in accordance with AHRI 260

Octave Band Sound Power Level, (dB re 1pW)

Model	Mode	Free Inlet & Case Radiated							Free Inlet & Case Radiated w/UltraQuiet Technology						
		Octave Band Frequency, Hz							Octave Band Frequency, Hz						
		125	250	500	1000	2000	4000	8000	125	250	500	1000	2000	4000	8000
TRC09	Fan Only: Low Speed	43	43	39	35	31	26	30	43	43	39	35	31	26	30
	Fan Only: High Speed	47	49	46	42	38	30	31	47	49	46	42	38	30	31
	Cooling: Low Speed	49	49	42	38	32	26	30	47	47	40	36	30	25	29
	Cooling: High Speed	52	54	46	43	38	31	31	49	51	44	41	36	30	30
	Heating: Low Speed	50	50	44	41	30	27	30	48	48	41	38	28	25	28
	Heating: High Speed	54	51	46	42	37	30	30	52	49	43	40	35	28	29
TRC12	Fan Only: Low Speed	46	49	45	41	36	29	30	46	49	45	41	36	29	30
	Fan Only: High Speed	54	56	55	49	46	40	38	54	56	55	49	46	40	38
	Cooling: Low Speed	54	53	47	41	36	30	30	52	50	45	39	34	28	28
	Cooling: High Speed	56	58	55	50	46	41	38	53	55	52	47	43	39	36
	Heating: Low Speed	52	54	48	41	36	30	29	50	52	45	39	34	28	28
	Heating: High Speed	56	58	55	49	45	40	38	53	55	52	47	43	38	36
TRC15	Fan Only: Low Speed	49	49	46	42	36	29	30	49	49	46	42	36	29	30
	Fan Only: High Speed	56	57	54	50	47	40	37	56	57	54	50	47	40	37
	Cooling: Low Speed	61	54	48	43	38	32	31	58	51	45	41	36	31	29
	Cooling: High Speed	63	58	54	51	47	41	37	60	55	52	48	44	39	35
	Heating: Low Speed	61	52	46	44	37	34	31	58	50	44	41	35	33	30
	Heating: High Speed	59	58	54	50	46	41	38	56	55	51	48	44	39	36
TRC18	Fan Only: Low Speed	50	53	51	46	41	33	32	50	53	51	46	41	33	32
	Fan Only: High Speed	57	60	58	55	50	44	41	57	60	58	55	50	44	41
	Cooling: Low Speed	56	60	52	49	42	34	32	53	57	50	46	39	32	30
	Cooling: High Speed	59	63	58	55	50	44	41	56	59	55	52	48	42	39
	Heating: Low Speed	64	60	51	47	42	34	32	61	57	48	44	39	32	30
	Heating: High Speed	60	62	58	55	50	44	41	57	59	55	52	48	42	39

This page intentionally left blank.

This page intentionally left blank.

This page intentionally left blank.

REVISION LOG

Date	Page #	Description
11/11/21	10 & 11	Added TRL Series
9/14/20	10 & 11	Adjusted table values for TE049
09/10/20	10 & 11	Adjusted table values for TE026
09/04/20	Various	Updated document design and verbiage. Removed obsolete product lines
5/15/17	All	Added TC Large and TY Data
10/30/14	17 & 18	Added TE Series Sound Data
02/27/14	All	Updated Text and Tables
01/18/05	Various	Added TT and TS Series Sound Data
01/18/05	15	Added Revision Log

THE RIGHT CHOICE

ClimateMaster is the world's largest and most progressive manufacturer of water-source heat pumps. We are committed to innovation and dedicated to environmentally clean, economically sound, and superbly comfortable home and business environments. Each ClimateMaster product is produced in our state-of-the-art facility. We strive for the highest product quality and service after the sale to give you peace of mind.

ClimateMaster has been designing and building equipment that enhances environments we live and work in every day for more than 60 years. In addition to geothermal heat pumps, ClimateMaster offers the most extensive product line of water-source heat pumps for use in a wide variety of applications.

ClimateMaster products are built in the U.S.A.

7300 S.W. 44th Street
Oklahoma City, OK 73179
Phone: 405-745-6000
Fax: 405-745-6058
climatemaster.com

ClimateMaster works continually to improve its products. As a result, the design and specifications of each product at the time for order may be changed without notice and may not be as described herein. Please contact ClimateMaster's Customer Service Department at 1-405-745-6000 for specific information on the current design and specifications. Statements and other information contained herein are not express warranties and do not form the basis of any bargain between the parties, but are merely ClimateMaster's opinion or commendation of its products.

© ClimateMaster, Inc. 2005
Rev. 11 November, 2021