HS/HL Submittal Data

CLIMATEMASTER®

Contractor: _____ P.O.: _____

Engineer: _____

Project Name: _____ Unit Tag: _____

Performance Data
HS/HL Horizontal 006

Rated Air Flow: 265 SCFM

Boxed areas represent HL units only.
HS - Water temperature range is 60°F - 95°F
HL - Water temperature range is 40°F - 110°F

		Cooling Performance - EAT 80/67°F (EER = 11.8)				Heating Performance - EAT 70°F (COP = 3.0)			
GPM	EWT °F	TOTAL BTUH	SENS BTUH	HEAT OF REJECTION BTUH	POWER INPUT WATTS	HEATING BTUH	HEAT OF ABSORPTION BTUH	POWER INPUT WATTS	UNIT WATER PRESSURE WATER FT H20
1.0	40	9275	6180	10850	480	OPERATION NOT RECOMMENDED			1.1
1.4	40	9560	6250	11090	470				1.9
1.9	40	9670	6270	11440	450				3.3
2.4	40	9660	6110	11520	440	6750	4820	570	4.9
1.0	50	8870	5960	10300	510	7030	5000	590	1.1
1.4	50	8950	6050	11570	500	7310	5250	600	1.9
1.9	50	9220	6110	11780	480	7670	5415	610	3.3
2.4	50	9480	6220	11810	470	7930	5710	620	4.9
1.0	60	7960	5710	9430	560	7940	5900	520	1.1
1.4	60	8300	5830	10080	540	8240	6160	530	1.9
1.9	60	8590	5950	10507	520	8550	6365	640	3.3
2.4	60	8750	5960	10440	510	8660	6480	650	4.9
1.0	60	8450	5550	10000	566	8230	6080	627	1.1
1.4	60	8640	5720	10400	541	8240	6300	638	1.9
1.9	60	8720	5820	10450	532	8319	6115	644	3.3
2.4	60	8740	5850	10450	529	8380	6160	648	4.9
1.0	70	7710	5340	9700	571	8300	6200	634	1.1
1.4	70	8260	5490	10140	575	8390	6370	640	1.9
1.9	70	8550	5590	10370	559	8800	6555	645	3.3
2.4	70	8650	5640	10450	551	8910	6600	648	4.9
1.0	85	6720	5140	8970	682	9320	7050	629	1.1
1.4	85	7080	5230	9205	652	9610	7280	655	1.9
1.9	85	7400	5280	9453	630	9750	7410	660	3.3
2.4	85	7550	5310	9530	620	9830	7530	662	4.9
1.0	90	6650	5130	9047	699				1.1
1.4	90	6780	5160	8995	675				1.9
1.9	90	7050	5200	9148	655				3.3
2.4	90	7130	5330	9276	645				4.9
1.0	95	6500	5130	9035	712				1.1
1.4	95	6650	5140	9083	695				1.9
1.9	95	6720	5150	8983	679				3.3
2.4	95	6860	5170	9043	668				4.9
1.0	100	5640	4740	8800	740				1.1
1.4	100	5920	4870	9022	720				1.9
1.9	100	5950	4930	9057	700				3.3
2.4	100	6230	4990	9130	690				4.9
1.0	110	OPERATION NOT RECOMMENDED							1.1
1.4	110								1.9
1.9	110	3540	4680	7980	750				3.3
2.4	110	5020	4750	8040	740				4.9

Interpolation is permissible. Extrapolation is not.

Bold Face = ARI Conditions

CORRECTION FACTORS

For Variations In Entering Air Temperature

	Cooling Corrections					* Sensible equals Total		Heating Corrections			
Entering Air °F WB	Total Cooling Capacity	Sensible Cooling Capacity Entering Dry Bulb 70° DB	75° DB	80° DB	85° DB	90° DB	Heat of Rejection	Entering Air °F DB	Heating Capacity	Heat of Absorption	Power Input Watts
61	0.901	0.916	1.151	1.200	*	*	0.917	50	1.087	1.049	0.561
64	0.950	0.563	1.107	1.147	1.388	*	0.969	55	1.045	1.022	0.880
67	1.000	0.616	0.363	1.000	1.235	*	1.000	70	1.000	1.000	1.000
70	1.054		0.719	0.852	1.075	1.225	1.049	75	0.951	0.957	1.030
73	1.108			0.706	0.930	1.168	1.090	80	0.920	0.922	1.064

For Variations In Entering Air Flow

	Cooling Corrections				Heating Corrections		
CFM	Total Cooling Capacity	Sensible Cooling Capacity	Heat of Rejection	Power Input Watts	Heating Capacity	Heat of Absorption	Power Input Watts
165	0.947	0.890	0.899	0.881	0.940	0.950	1.019
200	0.968	0.949	0.991	0.960	0.967	0.980	1.010
265	1.000	1.000	1.000	1.000	1.000	1.000	1.000
290	1.008	1.021	1.014	1.020	1.028	1.008	0.995
320	1.014	1.040	1.035	1.020	1.015	1.018	0.989

ClimateMaster works continually to improve its products. As a result, the design and specifications of each product at the time of order may be changed without notice and may not be as described herein. Please contact ClimateMaster's Customer Service Department at 1-405-745-6000 for specific information on the current design and specifications. Statements and other information contained herein are not express warranties and do not form the basis of any bargain between the parties, but are merely ClimateMaster's opinion or commendation of its products.

HS/HL/VS/VL Submittal Data

CLIMATEMASTER®

Contractor: _____ P.O.: _____

Engineer: _____

Project Name: _____ Unit Tag: _____

Performance Data HS/HL Horizontal & VS/VL Vertical 009

Rated Air Flow 340 SCFM

Boxed areas represent HL/VL units only.
HS/VS - Water temperature range is 60°F - 95°F
HL/VL - Water temperature range is 40°F - 110°F

		Cooling Performance - EAT 80/67°F (EER = 11.6)				Heating Performance - EAT 70°F (COP = 4.2)			
GPM	EWT °F	TOTAL BTUH	SENS BTUH	HEAT OF REJECTION BTUH	POWER INPUT WATTS	HEATING BTUH	HEAT OF ABSORPTION BTUH	POWER INPUT WATTS	UNIT WATER PRESSURE WATER FT H20
1.2	40	12270	8120	14610	650	OPERATION NOT RECOMMENDED			1.7
1.8	40	12540	8280	14580	630				3.5
2.5	40	12850	8470	14750	610				5.8
3.0	40	13050	8590	14890	590	8950	5386	780	8.6
1.2	50	11720	7730	14075	690	8670	6080	765	1.7
1.8	50	11970	7930	14278	670	9230	6570	779	3.5
2.5	50	12260	8130	14478	650	9750	7075	787	5.8
3.0	50	12490	8250	14660	630	10190	7502	776	8.6
1.2	50	10980	7360	13875	740	10350	7880	720	1.7
1.8	50	11410	7550	14278	710	10920	8530	706	3.5
2.5	50	11670	7750	14478	690	11300	8820	697	5.8
3.0	50	11830	7850	14630	680	11530	8950	687	8.6
1.2	60	10530	7120	13250	790	10770	8410	785	1.7
1.8	60	10890	7480	13330	751	11010	8585	797	3.5
2.5	60	10950	7640	13290	733	11170	8725	803	5.8
3.0	60	11130	7710	13450	727	11320	8855	808	8.6
1.2	70	9960	7090	12650	844	11500	8700	807	1.7
1.8	70	10660	7360	13200	796	11710	9090	819	3.5
2.5	70	10890	7570	13350	771	12000	9350	827	5.8
3.0	70	10920	7570	13350	762	12.20	9450	820	8.6
1.2	85	8610	6970	11570	929	12420	9760	837	1.7
1.8	85	9280	7230	12080	877	12893	10255	849	3.5
2.5	85	9800	7400	12500	845	13060	10313	853	5.8
3.0	85	9940	7450	12600	836	13160	10380	858	8.6
1.2	90	8350	6840	11440	969				1.7
1.8	90	8840	7060	11790	918				3.5
2.5	90	9250	7220	12090	869				5.8
3.0	90	9430	7280	12230	876				8.6
1.2	95	8230	6730	11420	1000				1.7
1.8	95	8480	6910	11870	951				3.5
2.5	95	8750	7030	12230	926				5.8
3.0	95	8960	7110	12860	939				8.6
1.2	100	8120	6920	11390	1024				1.7
1.8	100	8350	6110	11420	962				3.5
2.5	100	8620	6200	11680	958				5.8
3.0	100	8830	6240	11330	942				8.6
1.2	110	OPERATION NOT RECOMMENDED							1.7
1.8	110								3.5
2.5	110	8010	5820	11320	980				5.8
3.0	110	8090	5830	11370	970				8.6

Interpolation is permissible. Extrapolation is not.

Bold Face = ARI Conditions

CORRECTION FACTORS

For Variations In Entering Air Temperature

Cooling Corrections								Heating Corrections			
							* Sensible equals Total				
Entering Air °F WB	Total Cooling Capacity	Sensible Cooling Capacity Entering Dry Bulb 70° DB	75° DB	80° DB	85° DB	90° DB	Heat of Rejection	Entering Air °F DB	Heating Capacity	Heat of Absorption	Power Input Watts
61	0.880	0.689	0.973	*	*	*	0.915	60	1.027	1.024	0.939
64	0.940	0.628	0.854	1.140	*	*	0.956	65	1.012	1.010	0.970
67	1.000	0.566	0.735	1.000	1.158	*	1.000	70	1.000	1.000	1.000
70	1.059		0.615	0.859	1.016	1.289	1.044	75	0.993	0.987	1.038
73	1.119			0.720	0.873	1.196	1.089	80	0.988	0.975	1.075

For Variations In Entering Air Flow

	Cooling Corrections				Heating Corrections		
CFM	Total Cooling Capacity	Sensible Cooling Capacity	Heat of Rejection	Power Input Watts	Heating Capacity	Heat of Absorption	Power Input Watts
235	0.957	0.959	0.953	0.923	0.957	0.965	1.053
285	0.983	0.985	0.974	0.961	0.983	0.985	1.027
340	1.000	1.000	1.000	1.000	1.000	1.000	1.000
360	1.006	1.006	1.009	1.007	1.005	1.007	0.950
375	1.012	1.015	1.018	1.019	1.011	1.015	0.933

ClimateMaster works continually to improve its products. As a result, the design and specifications of each product at the time of order may be changed without notice and may not be as described herein. Please contact ClimateMaster's Customer Service Department at 1-405-745-6000 for specific information on the current design and specifications. Statements and other information contained herein are not express warranties and do not form the basis of any bargain between the parties. But are merely ClimateMaster's opinion or commendation of its products.

HS/HL/VS/VL Submittal Data

CLIMATEMASTER®

Contractor: _____ P.O.: _____

Engineer: _____

Project Name: _____ Unit Tag: _____

Performance Data
HS/HL Horizontal
& VS/VL Vertical 012

Rated Air Flow 385 SCFM

Boxed areas represent HL/VL units only.
HS/VS - Water temperature range is 60°F - 95°F
HL/VL - Water temperature range is 40°F - 110°F

Cooling Performance - EAT 80/67°F (EER = 11.3) | Heating Performance - EAT 70°F (COP = 4.0)

GPM	EWT °F	TOTAL BTUH	SENS BTUH	HEAT OF REJECTION BTUH	POWER INPUT WATTS	HEATING BTUH	HEAT OF ABSORPTION BTUH	POWER INPUT WATTS	UNIT WATER PRESSURE WATER FT H20
1.8	40	15160	9650	18700	850	OPERATION NOT RECOMMENDED			3.3
2.5	40	15520	9860	18260	860				6.2
3.2	40	15880	10080	18500	870				9.5
4.0	40	15980	10150	18580	870	10820	7400	1020	14.0
1.8	50	14680	9520	17680	940	11460	7963	1040	3.3
2.5	50	14920	9680	17850	920	12130	8500	1060	6.2
3.2	50	14950	9670	18050	880	12890	9202	1130	9.5
4.0	50	15440	9810	18180	860	13020	9300	1150	14.0
1.8	60	13970	8930	17320	1020	13450	9704	1110	3.3
2.5	60	14340	9240	17470	980	14080	10213	1110	6.2
3.2	60	14610	9510	17640	950	14420	10528	1150	9.5
4.0	60	14760	9630	17230	930	14600	10729	1190	14.0
1.8	70	13350	8600	16450	1002	14170	10413	1121	3.3
2.5	70	13650	8892	17140	998	14590	10750	1139	6.2
3.2	70	14170	9073	17210	951	14800	10912	1148	9.5
4.0	70	14270	9053	17250	960	15000	11080	1155	14.0
1.8	78	12470	8330	15850	1060	15160	11288	1160	3.3
2.5	78	13140	8540	16410	1025	15760	11835	1180	6.2
3.2	78	13230	8590	16550	1038	16200	12208	1193	9.5
4.0	78	13250	8610	16430	998	16600	12570	1204	14.0
1.8	85	11630	7630	15325	1158	16800	12775	1209	3.3
2.5	85	11980	7900	15517	1108	17540	13562	1228	6.2
3.2	85	12260	8020	16000	1089	18120	14096	1244	9.5
4.0	85	12340	8110	15780	1079	18530	14480	1257	14.0
1.8	90	11510	7500	15340	1193				3.3
2.5	90	11790	7700	15360	1149				6.2
3.2	90	11870	7820	15370	1129				9.5
4.0	90	11990	7910	15430	1117				14.0
1.8	95	11460	7430	15340	1217				3.3
2.5	95	11590	7560	15360	1191				6.2
3.2	95	11620	7640	15350	1170				9.5
4.0	95	11710	7720	15400	1157				14.0
1.8	100	11340	7360	15837	1239				3.3
2.5	100	11410	7490	16080	1230				6.2
3.2	100	11490	7570	16112	1202				9.5
4.0	100	11600	7650	16250	1194				14.0
1.8	110	OPERATION NOT RECOMMENDED							3.3
2.5	110								6.2
3.2	110	11390	7500	15390	1262				9.5
4.0	110	11490	7560	15480	1251				14.0

Interpolation is permissible. Extrapolation is not.

Bold Face = ARI Conditions

Correction Factors

For Variations In Entering Air Temperature

Entering Air °F WB	Total Cooling Capacity	Sensible Cooling Capacity Entering Dry Bulb 70° DB	75° DB	80° DB	85° DB	90° DB	Heat of Rejection
62	0.932	0.818	1.036	1.228	*	*	0.920
64	0.967	0.702	0.911	1.116	1.267	*	0.965
67	1.000	0.585	0.788	1.000	1.166	1.410	1.000
70	1.038		0.660	0.882	1.066	1.310	1.030
72	1.080			0.771	0.966	1.184	1.057

Cooling Corrections — * Sensible equals Total

Entering Air °F DB	Heating Capacity	Heat of Absorption	Power Input Watts
60	1.072	1.041	0.963
65	1.033	1.020	0.984
70	1.000	1.000	1.000
75	0.975	0.976	1.020
80	0.968	0.960	1.036

Heating Corrections

For Variations In Entering Air Flow

CFM	Total Cooling Capacity	Sensible Cooling Capacity	Heat of Rejection	Power Input Watts	Heating Capacity	Heat of Absorption	Power Input Watts
290	0.930	0.850	0.970	0.989	0.957	0.947	1.021
340	0.970	0.921	0.986	0.994	0.980	0.981	1.010
385	1.000	1.000	1.000	1.000	1.000	1.000	1.000
415	1.019	1.017	1.011	1.030	1.025	1.025	0.991
455	1.019	1.031	1.020	1.043	1.048	1.041	0.985

ClimateMaster works continually to improve its products. As a result, the design and specifications of each product at the time of order may be changed without notice and may not be as described herein. Please contact ClimateMaster's Customer Service Department at 1-405-745-6000 for specific information on the current design and specifications. Statements and other information contained herein are not express warranties and do not form the basis of any bargain between the parties, but are merely ClimateMaster's opinion or commendation of its products.

HS/HL/VS/VL Submittal Data

CLIMATEMASTER®

Contractor: _____ P.O.: _____

Engineer: _____

Project Name: _____ Unit Tag: _____

Performance Data
HS/HL Horizontal
& VS/VL Vertical 015

Rated Air Flow 530 CFM

Boxed areas represent HL/VL units only.
HS/VS - Water temperature range is 60°F - 95°F
HL/VL - Water temperature range is 40°F - 110°F

		Cooling Performance - EAT 80/67°F (EER = 11.0)				Heating Performance - EAT 70°F (COP = 4.0)			
GPM	EWT °F	TOTAL BTUH	SENS BTUH	HEAT OF REJECTION BTUH	POWER INPUT WATTS	HEATING BTUH	HEAT OF ABSORPTION BTUH	POWER INPUT WATTS	UNIT WATER PRESSURE WATER FT H2O
2.0	40	16150	11480	19720	1349	OPERATION NOT RECOMMENDED			1.2
2.8	40	16210	11570	19790	1321				2.2
3.8	40	16440	11630	19850	1302				3.9
5.0	40	16490	11660	19870	1292	13530	9490	1210	6.4
2.0	50	15730	11250	19470	1357	13880	9580	1230	1.1
2.8	50	15800	11430	19550	1348	14530	10050	1260	2.2
3.8	50	16160	11500	19730	1349	15110	10740	1280	3.9
5.0	50	16300	11690	19850	1335	15210	10840	1286	6.4
2.0	60	15250	11230	19350	1357	15860	11220	1300	1.1
2.8	60	15550	11360	19420	1355	16290	11730	1320	2.2
3.8	60	15800	11410	19570	1346	16620	12080	1330	3.9
5.0	60	16070	11480	19710	1337	16800	12240	1336	6.4
2.0	65	15100	11150	18970	1335	16600	12120	1310	1.1
2.8	60	15220	11210	19050	1338	17480	12580	1348	2.2
3.8	60	15400	11300	19130	1336	17610	12950	1355	3.9
5.0	60	15670	11400	19350	1337	17830	13180	1352	6.4
2.0	70	14500	10880	18750	1321	18200	13420	1352	1.1
2.8	70	14030	11100	18050	1310	18540	13860	1369	2.2
3.8	70	13220	11380	18790	1364	18880	14100	1377	3.9
5.0	70	13250	11360	18200	1348	19100	14270	1385	6.4
2.0	85	13320	10700	17650	1359	19680	14850	1417	1.1
2.8	85	12830	10930	18280	1303	20050	15220	1426	2.2
3.8	85	14100	11130	18470	1281	20530	15450	1430	3.9
5.0	85	14650	11220	17780	1264	20470	15580	1435	6.4
2.0	90	13020	10603	17800	1407				1.1
2.8	90	12390	10800	17970	1345				2.0
3.8	90	13690	10890	18190	1321				3.9
5.0	90	13910	11070	18350	1302				6.4
2.0	95	12800	10480	17760	1453				1.2
2.8	95	12040	10580	17760	1386				2.2
3.8	95	13280	10750	17850	1364				3.9
5.0	95	13470	10840	18040	1342				6.4
2.0	100	12390	10250	17900	1498				1.1
2.8	100	12770	10380	17650	1431				2.2
3.8	100	12990	10550	17790	1407				3.9
5.0	100	13790	10690	17900	1383				6.4
2.0	110	OPERATION NOT RECOMMENDED							1.3
2.8	110								2.2
3.8	110	12680	10050	17170	1493				3.9
5.0	110	12260	10110	17250	1464				6.4

Interpolation is permissible. Extrapolation is not.

Bold Face = ARI Conditions

CORRECTION FACTORS

For Variations In Entering Air Temperature

	Cooling Corrections					* Sensible equals Total		Heating Corrections			
Entering Air °F WB	Total Cooling Capacity	Sensible Cooling Capacity Entering Dry Bulb 70° DB	75° DB	80° DB	85° DB	90° DB	Heat of Rejection	Entering Air °F DB	Heating Capacity	Heat of Absorption	Power Input Watts
61	0.890	0.626	1.028	*	*	*	0.895	60	1.002	1.035	0.965
64	0.945	0.730	0.889	1.165	*	*	0.950	65	1.005	1.020	0.980
67	1.000	0.831	0.751	1.000	1.359	*	1.000	70	1.000	1.000	1.000
70	1.023		0.613	0.835	1.012	1.250	1.027	75	0.988	0.978	1.030
73	1.040			0.669	0.884	1.097	1.045	80	0.972	0.960	1.052

For Variations In Entering Air Flow

	Cooling Corrections				Heating Corrections		
CFM	Total Cooling Capacity	Sensible Cooling Capacity	Heat of Rejection	Power Input Watts	Heating Capacity	Heat of Absorption	Power Input Watts
450	0.952	0.912	0.976	0.983	0.963	0.980	1.018
490	0.976	0.956	0.988	0.992	0.982	0.977	1.010
530	1.000	1.000	1.000	1.000	1.000	1.000	1.000
570	1.028	1.029	1.010	1.009	1.011	1.011	0.982
610	1.015	1.044	1.021	1.017	1.020	1.029	0.987

ClimateMaster works continually to improve its products. As a result, the design and specifications of each product at the time of order may be changed without notice and may not be as described herein. Please contact ClimateMaster's Customer Service Department at 1-405-745-6000 for specific information on the current design and specifications. Statements and other information contained herein are not express warranties and do not form the basis of any bargain between the parties, but are merely ClimateMaster's opinion or commendation of its products.

HS/HL/VS/VL Submittal Data

CLIMATEMASTER®

Contractor: _____ P.O.: _____

Engineer: _____

Project Name: _____ Unit Tag: _____

Performance Data
HS/HL Horizontal
& VS/VL Vertical 019

Rated Air Flow 650 CFM

Boxed areas represent HL/VL units only.
HS/VS - Water temperature range is 60°F - 95°F
HL/VL - Water temperature range is 40°F - 110°F

		Cooling Performance - EAT 80/67°F (RHR = 53.4)				Heating Performance - EAT 70°F (COP = 4.3)			
GPM	EWT °F	TOTAL BTUH	SENS BTUH	HEAT OF REJECTION BTUH	POWER INPUT WATTS	HEATING BTUH	HEAT OF ABSORPTION BTUH	POWER INPUT WATTS	UNIT WATER PRESSURE WATER FT H2O
2.5	10	23320	16950	27260	1156	OPERATION NOT RECOMMENDED			1.7
3.8	40	23840	17260	27850	1165				5.0
5.3	40	24120	17360	27750	1160				9.0
6.3	40	24380	17420	27800	1024	17340	12750	1349	12.2
2.5	50	22870	16700	26950	1208	18690	13390	1375	1.7
3.8	50	23270	16920	27240	1164	19860	14340	1410	5.0
5.3	50	23620	17100	27440	1321	19760	14820	1445	9.0
6.3	50	23870	17140	27600	1045	19820	14960	1453	12.2
2.5	60	21580	15960	26140	1338	20240	15310	1472	1.7
3.8	60	22203	16410	26590	1260	21200	16080	1498	5.0
5.3	60	22623	16530	26840	1225	21820	16610	1523	9.0
6.3	60	23013	16590	27150	1217	21840	16610	1532	12.2
2.5	68	21550	15970	26210	1268	20760	15560	1512	1.7
3.8	68	21840	16080	26210	1283	21250	16030	1524	5.0
5.3	68	22140	16185	26390	1245	21640	16410	1531	9.0
6.3	68	22630	16310	26810	1276	21730	16480	1536	12.2
2.5	70	20390	15510	25660	1537	22030	16770	1541	1.7
3.8	70	20780	15610	25860	1491	22610	17250	1558	5.0
5.3	70	21750	16220	26333	1345	**23000**	**17640**	**1568**	**9.0**
6.3	70	22140	16270	26670	1328	23190	17820	1575	12.2
2.5	85	18180	13880	23640	1608	23970	18520	1595	1.7
3.8	85	19320	14760	24560	1537	24660	19340	1618	5.0
5.3	85	**20000**	**15150**	**25090**	**1492**	24950	19430	1625	9.0
6.3	85	20380	15190	25790	1480	25348	19570	1631	12.2
2.5	90	17480	13720	23170	1669				1.7
3.8	90	18640	14490	24390	1598				5.0
5.3	90	19330	14790	24490	1573				9.0
6.3	90	19610	14810	24860	1540				12.2
2.5	95	16990	13520	22830	1703				1.7
3.8	95	17860	14080	23520	1660				5.0
5.3	95	18250	14280	23820	1634				9.0
6.3	95	18640	14300	24130	1625				12.2
2.5	100	16800	13450	22450	1714				1.7
3.8	100	17280	13870	22950	1673				5.0
5.3	100	17670	14050	23290	1649				9.0
6.3	100	17960	14010	23540	1638				12.2
2.5	110	OPERATION NOT RECOMMENDED							1.7
3.8	110								5.0
5.3	110	16880	13650	22850	1747				9.0
6.3	110	17120	13560	23022	1729				12.2

Interpolation is permissible. Extrapolation is not.

Bold Face = ARI Conditions

CORRECTION FACTORS

For Variations In Entering Air Temperature

	Cooling Corrections							Heating Corrections			
						* Sensible equals Total					
Entering Air °F WB	Total Cooling Capacity	Sensible Cooling Capacity Entering Dry Bulb 70° DB	75° DB	80° DB	85° DB	90° DB	Heat of Rejection	Entering Air °F DB	Heating Capacity	Heat of Absorption	Power Input Watts
61	0.950	0.837	1.051	1.210	*	*	0.931	60	1.093	1.132	0.952
64	0.965	0.709	0.918	1.145	1.362	*	0.950	65	1.035	1.067	0.984
67	1.000	0.580	0.785	1.000	1.155	1.320	1.000	70	1.000	1.000	1.000
70	1.030		0.652	0.856	1.009	1.256	1.039	75	0.897	0.875	1.038
73	1.050			0.709	0.882	1.082	1.056	80	0.795	0.755	1.082

For Variations In Entering Air Flow

	Cooling Corrections				Heating Corrections		
CFM	Total Cooling Capacity	Sensible Cooling Capacity	Heat of Rejection	Power Input Watts	Heating Capacity	Heat of Absorption	Power Input Watts
550	0.989	0.921	0.980	0.981	0.976	0.960	1.025
600	0.995	0.913	0.991	0.992	0.990	0.989	1.011
650	1.000	1.000	1.000	1.000	1.000	1.000	1.000
700	1.000	1.080	1.009	1.010	1.009	1.008	0.988
750	1.016	1.130	1.020	1.021	1.021	1.015	0.970

ClimateMaster works continually to improve its products. As a result, the design and specifications of each product at the time of order may be changed without notice and may not be as described herein. Please contact ClimateMaster's Customer Service Department at 1-405-745-6000 for specific information on the current design and specifications. Statements and other information contained herein are not express warranties and do not form the basis of any bargain between the parties, but are merely ClimateMaster's opinion or commendation of its products.

HS/HL/VS/VL Submittal Data

CLIMATEMASTER®

Contractor: _____ P.O.: _____

Engineer: _____

Project Name: _____ Unit Tag: _____

Performance Data
HS/HL Horizontal
& VS/VL Vertical 024

Rated Air Flow 800 CFM

Boxed areas represent HL/VL units only.
HS/HS - Water temperature range is 60°F - 95°F
HL/VL - Water temperature range is 40°F - 110°F

	Cooling Performance - EAT 80/67°F (EER = 13.4)					Heating Performance - EAT 70°F (COP = 4.6)			
GPM	EWT °F	TOTAL BTUH	SENS BTUH	HEAT OF REJECTION BTUH	POWER INPUT WATTS	HEATING BTUH	HEAT OF ABSORPTION BTUH	POWER INPUT WATTS	UNIT WATER PRESSURE WATER FT H20
3.0	40	29320	21150	34120	1106	OPERATION NOT RECOMMENDED			3.4
4.5	40	30360	21360	34880	1225				6.9
6.0	40	30270	21570	34990	1298				11.3
7.5	40	30680	21670	35010	1371	19170	12980	1518	16.7
3.0	50	29900	22630	34200	1525	20420	15030	1578	3.4
4.5	50	29210	22940	34170	1452	21960	16470	1608	6.9
6.0	50	29420	21150	34170	1393	22930	17330	1638	11.3
7.5	50	29930	21250	34300	1370	23410	17790	1654	16.7
3.0	60	28270	19790	33830	1629	24080	18380	1669	3.4
4.5	60	28750	20330	34180	1560	25430	19590	1709	6.9
6.0	60	29000	20620	34200	1525	26930	20890	1752	11.3
7.5	60	29110	20730	34260	1530	26780	20790	1752	16.7
3.0	60	25970	18420	31380	1586	22990	17600	1785	3.4
4.5	60	26280	18640	31450	1528	25450	19206	1799	6.9
6.0	60	27010	19370	32050	1493	26320	20330	1808	11.3
7.5	60	27640	20000	32640	1467	26730	20850	1823	16.7
3.0	70	25550	18110	31450	1715	23070	20860	1838	3.4
4.5	70	26070	18640	31680	1647	28230	21970	1853	6.9
6.0	70	26820	19160	32260	1600	28900	22610	1842	11.3
7.5	70	27530	19370	32700	1574	29280	23070	1849	16.7
3.0	85	23340	17930	29780	1919	30630	24250	1868	3.4
4.5	85	24390	18220	30480	1846	31210	24790	1879	6.9
6.0	85	24500	18430	30930	1828	31600	25160	1885	11.3
7.5	85	25020	18530	31090	1769	31790	25350	1892	16.7
3.0	90	22510	17690	29270	1953				3.4
4.5	90	23350	18010	29870	1911				6.9
6.0	90	23880	18110	30340	1894				11.3
7.5	90	24290	18220	30550	1836				16.7
3.0	95	21880	17490	28850	2024				3.4
4.5	95	22630	17690	29360	1977				6.9
6.0	95	23140	17900	29720	1930				11.3
7.5	95	23450	18010	29940	1904				16.7
3.0	100	21150	17280	28390	2123				3.4
4.5	100	21780	17490	28780	2054				6.9
6.0	100	22300	17590	29130	2002				11.3
7.5	100	22630	17690	29260	1976				16.7
3.0	110	OPERATION NOT RECOMMENDED							3.4
4.5	110								6.9
6.0	110	20940	17280	28390	2148				11.3
7.5	110	21230	17360	28470	2118				16.7

Interpolation is permissible. Extrapolation is not.

Bold Face = ARI Conditions

CORRECTION FACTORS

For Variations In Entering Air Temperature

Cooling Corrections								Heating Corrections			
						* Sensible equals Total					
Entering Air °F WB	Total Cooling Capacity	Sensible Cooling Capacity Entering Dry Bulb 70° DB	75° DB	80° DB	85° DB	90° DB	Heat of Rejection	Entering Air °F DB	Heating Capacity	Heat of Absorption	Power Input Watts
61	0.905	0.390	1.085	1.290	*	*	0.859	60	1.015	1.061	0.950
64	0.942	0.674	0.887	1.118	1.250	*	0.952	65	1.008	1.025	0.975
67	1.000	0.558	0.740	1.000	1.218	1.312	1.000	70	1.000	1.000	1.000
70	1.019		0.518	0.838	1.026	1.209	1.028	75	0.993	0.974	1.025
73	1.038		0.556	0.620	0.787	1.066	1.043	80	0.985	0.949	1.049

For Variations In Entering Air Flow

	Cooling Corrections				Heating Corrections		
CFM	Total Cooling Capacity	Sensible Cooling Capacity	Heat of Rejection	Power Input Watts	Heating Capacity	Heat of Absorption	Power Input Watts
600	0.981	0.796	0.977	0.976	0.972	0.963	1.031
700	0.991	0.898	0.989	0.988	0.986	0.981	1.015
800	1.000	1.000	1.000	1.000	1.000	1.000	1.000
900	1.010	1.067	1.012	1.011	1.012	1.010	0.978
1000	1.019	1.125	1.023	1.023	1.023	1.019	0.955
1100	1.027	1.204	1.033	1.035	1.030	1.027	0.931

ClimateMaster works continually to improve its products. As a result, the design and specifications of each product at the time of order may be changed without notice and may not be as described herein. Please contact ClimateMaster Customer Service Department at 1-405-745-6000 for specific information on the current design and specifications. Statements and other information contained herein are not express warranties and do not form the basis of any bargain between the parties, but are merely ClimateMaster's opinion or commendation of its products.

HS/HL/VS/VL Submittal Data

CLIMATEMASTER®

Contractor: _____ P.O.: _____

Engineer: _____

Project Name: _____ Unit Tag: _____

Performance Data
HS/HL Horizontal
& VS/VL Vertical 030

Rated Air Flow 1000 CFM

Boxed areas represent HL/VL units only.
HS/VS - Water temperature range is 60°F - 95°F
HL/VL - Water temperature range is 40°F - 110°F

		Cooling Performance - EAT 80/67°F (EER = 12.8)				Heating Performance - EAT 70°F (COP = 3.6)			
GPM	EWT °F	TOTAL BTUH	SENS BTUH	HEAT OF REJECTION BTUH	POWER INPUT WATTS	HEATING BTUH	HEAT OF ABSORPTION BTUH	POWER INPUT WATTS	UNIT WATER PRESSURE WATER FT H20
3.7	40	34180	24370	40280	1799	OPERATION NOT RECOMMENDED			1.8
5.6	40	34750	24210	40580	1809				3.7
7.5	40	35080	24210	40850	1807				6.5
9.4	40	35500	24370	40720	1589	23540	17440	1785	9.6
3.7	50	33250	23890	39830	1924	25310	18930	1798	1.8
5.6	50	33770	24010	40410	1829	27060	20750	1860	3.7
7.5	50	34080	24110	40200	1766	28520	22070	1891	6.5
9.4	50	34250	24110	40510	1768	29510	22900	1906	9.6
3.7	60	32140	22290	39150	2056	30380	23700	1935	1.8
5.6	60	32860	22600	39620	1982	32630	25830	2049	3.7
7.5	60	33260	22800	39810	1923	34290	27150	2080	6.5
9.4	60	33750	22910	40060	1875	35850	28950	2109	9.6
3.7	70	31130	22350	38010	2016	30480	23170	2142	1.8
5.6	70	31430	22570	38130	1955	32230	25150	2220	3.7
7.5	70	31740	22800	38210	1897	34030	26260	2266	6.5
9.4	70	32250	22980	38600	1861	34490	26680	2282	9.6
3.7	80	30110	22580	37720	2232	34580	26790	2289	1.8
5.6	80	30420	22810	37800	2164	36030	28810	2375	3.7
7.5	80	30620	22960	37850	2119	38300	29810	2428	6.5
9.4	80	31030	23140	37930	2025	38590	30230	2459	9.6
3.7	85	27060	21160	35420	2453	40440	31810	2528	1.8
5.6	85	28590	21770	36830	2358	42300	33580	2613	3.7
7.5	85	29500	22070	37360	2304	43380	34190	2661	6.5
9.4	85	29910	22130	37780	2271	43670	34520	2681	9.6
3.7	90	25530	20450	34140	2525				1.8
5.6	90	27120	21260	35770	2435				3.7
7.5	90	28360	21670	36530	2381				6.5
9.4	90	28890	21870	36910	2352				9.6
3.7	95	23500	19630	32470	2650				1.8
5.6	95	25940	20650	34500	2539				3.7
7.5	95	26960	21060	35340	2458				6.5
9.4	95	27470	21260	35760	2432				9.6
3.7	100	24310	19840	33660	2723				1.8
5.6	100	25020	20340	33890	2600				3.7
7.5	100	25840	20750	34480	2535				6.5
9.4	100	26740	20960	34730	2519				9.6
3.7	110	OPERATION NOT RECOMMENDED							1.8
5.6	110								3.7
7.5	110	24318	19730	33710	2755				6.5
9.4	110	24418	19910	32620	2702				9.6

Interpolation is permissible. Extrapolation is not.

Bold Face = ARI Conditions

CORRECTION FACTORS

For Variations In Entering Air Temperature

Cooling Corrections								Heating Corrections			
		* Sensible equals Total									
Entering Air °F WB	Total Cooling Capacity	Sensible Cooling Capacity Entering Dry Bulb 70° DB	75° DB	80° DB	85° DB	90° DB	Heat of Rejection	Entering Air °F DB	Heating Capacity	Heat of Absorption	Power Input Watts
61	0.844	0.804	1.023	1.194	*	*	0.856	60	1.011	1.044	0.935
64	0.923	0.685	0.893	1.119	1.260	*	0.936	65	1.006	1.022	0.958
67	1.000	0.581	0.763	1.000	1.157	1.239	1.000	70	1.000	1.000	1.000
70	1.056		0.633	0.880	1.059	1.248	1.026	75	0.987	0.972	1.029
72	1.071		0.516	0.735	0.929	1.132	1.069	80	0.974	0.945	1.078

For Variations In Entering Air Flow

	Cooling Corrections				Heating Corrections		
GPM	Total Cooling Capacity	Sensible Cooling Capacity	Heat of Rejection	Power Input Watts	Heating Capacity	Heat of Absorption	Power Input Watts
750	0.949	0.802	0.948	0.967	0.974	0.965	1.030
875	0.980	0.915	0.979	0.979	0.986	0.983	1.015
1000	1.000	1.000	1.000	1.000	1.000	1.000	1.000
1125	1.011	1.063	1.012	1.019	1.014	1.021	0.990
1250	1.018	1.117	1.020	1.037	1.021	1.042	0.981

ClimateMaster works continually to improve its products. As a result, the design and specifications of each product at the time of order may be changed without notice and may not be as described herein. Please contact ClimateMaster's Customer Service Department at 1-405-745-6000 for specific information on the current design and specifications. Statements and other information contained herein are not express warranties and do not form the basis of any bargain between the parties, but are merely ClimateMaster's opinion or commendation of its products.

HS/HL/VS/VL Submittal Data

CLIMATEMASTER®

Contractor: _____ P.O.: _____

Engineer: _____

Project Name: _____ Unit Tag: _____

Performance Data
HS/HL Horizontal
& VS/VL Vertical 036

Rated Air Flow 1250 CFM

Boxed areas represent HL/VL units only.
HS/VS - Water temperature range is 60°F - 95°F
HL/VL - Water temperature range is 40°F - 110°F

		Cooling Performance - EAT 80.6°F (HEIR = 11.0)				Heating Performance - EAT 70°F (COP = 3.0)			
GPM	EWT °F	TOTAL BTUH	SENS BTUH	HEAT OF REJECTION BTUH	POWER INPUT WATTS	HEATING BTUH	HEAT OF ABSORPTION BTUH	POWER INPUT WATTS	UNIT WATER PRESSURE WATER FT H20
4.5	40	41880	28600	50230	2512	OPERATION NOT RECOMMENDED			2.2
6.6	40	42418	29138	50450	2426				4.6
9.4	40	42828	29563	50710	2356				9.4
12.0	40	43080	29820	50780	2315	27658	25280	3011	15.3
4.5	50	40205	28238	49960	2882	28804	27480	2988	2.2
6.6	50	41177	28893	50290	2779	31282	29080	3072	4.6
9.4	50	41866	29379	50410	2656	33221	28200	3260	9.4
12.0	50	41838	29571	50620	2567	34085	29520	3302	15.3
4.5	60	38916	27654	49370	3079	34856	28020	3176	2.2
6.6	60	40061	28104	49920	2960	37720	29832	3248	4.6
9.4	60	40593	29007	50146	2837	39937	31135	3587	9.4
12.0	60	41238	29321	50350	2712	42119	34500	3600	15.3
4.5	60	39100	28203	48210	2736	33600	27810	2467	2.2
6.6	60	40500	28203	48878	2513	35700	28271	2623	4.6
9.4	60	42400	30800	49298	2367	37200	32618	2733	9.4
12.0	60	42830	31300	49620	2292	37900	34089	2794	15.3
4.5	70	36900	27500	47070	3055	38300	32378	2892	2.2
6.6	70	38300	28800	47750	2827	41003	33339	3072	4.6
9.4	70	39350	29350	48280	2666	42500	36660	3199	9.4
12.0	70	39800	29700	48520	2632	43200	38220	3268	15.3
4.5	85	33600	25100	45370	3534	46400	37865	3534	2.2
6.6	85	34300	26250	45060	3230	48800	37620	3744	4.6
9.4	85	35000	26900	45600	3188	50100	40749	3898	9.4
12.0	85	35500	27200	46880	3116	51300	41880	3979	15.3
4.5	95	32600	24300	44950	3635				2.2
6.6	95	34000	25400	45610	3487				4.6
9.4	95	34600	26000	45730	3341				9.4
12.0	95	35400	26400	46320	3281				15.3
4.5	95	31800	23600	44440	3855				2.2
6.6	95	33000	24600	45150	3659				4.6
9.4	95	33800	25700	45500	3515				9.4
12.0	95	34300	25800	45770	3446				15.3
4.5	100	29100	19100	41620	3739				2.2
6.6	100	30500	19600	42700	3663				4.6
9.4	100	31400	20800	42850	3325				9.4
12.0	100	32000	20200	43530	3402				15.3
4.5	110	OPERATION NOT RECOMMENDED							2.2
6.6	110								4.6
9.4	110	28659	18650	40840	3370				9.4
12.0	110	28796	19030	40930	3293				15.3

Interpolation is permissible. Extrapolation is not.

Bold Face = ARI Conditions

CORRECTION FACTORS

For Variations In Entering Air Temperature

	Cooling Corrections							Heating Corrections			
		* Sensible equals Total									
Entering Air °F WB	Total Cooling Capacity	Sensible Cooling Capacity Entering Dry Bulb 70° DB	75° DB	80° DB	85° DB	90° DB	Heat of Rejection	Entering Air °F DB	Heating Capacity	Heat of Absorption	Power Input Watts
61	0.910	0.763	1.030	*	*	*	0.895	60	1.025	1.047	0.965
64	0.955	0.613	0.881	1.148	*	*	0.948	65	1.010	1.025	0.990
67	1.000	0.466	0.733	1.000	1.253	*	1.002	70	1.000	1.000	1.000
70	1.045		0.585	0.852	1.118	*	1.055	75	0.980	0.977	1.020
73	1.090		0.436	0.703	0.970	1.139	1.109	80	0.965	0.955	1.045

For Variations In Entering Air Flow

	Cooling Corrections				Heating Corrections		
CFM	Total Cooling Capacity	Sensible Cooling Capacity	Heat of Rejection	Power Input Watts	Heating Capacity	Heat of Absorption	Power Input Watts
900	0.961	0.955	0.954	0.951	0.961	0.966	1.045
1025	0.980	0.978	0.982	0.987	0.980	0.983	1.022
1150	0.993	0.989	0.996	0.998	0.990	0.992	1.011
1250	1.000	1.000	1.000	1.000	1.000	1.000	1.000
1375	1.014	1.016	1.030	1.031	1.014	1.012	0.984
1500	1.028	1.032	1.059	1.062	1.028	1.024	0.968

ClimateMaster works continually to improve its products. As a result, the design and specifications of each product at the time of order may be changed without notice and may not be as described herein. Please contact ClimateMaster's Customer Service Department at 1-405-745-6000 for specific information on the current design and specifications. Statements and other information herein are not express warranties and do not form the basis of any bargain between the parties, but are merely ClimateMaster's opinion or commendation of its products.

HS/HL/VS/VL Submittal Data

CLIMATEMASTER®

Contractor: _____ P.O.: _____

Engineer: _____

Project Name: _____ Unit Tag: _____

Performance Data
HS/HL Horizontal & VS/VL Vertical 042

Rated Air Flow 1500 CFM

Boxed areas represent HL/VL units only.
HS/VS - Water temperature range is 60°F - 85°F
HL/VL - Water temperature range is 40°F - 110°F

		Cooling Performance - EAT 80/67°F (EER = 11.2)				Heating Performance - EAT 70°F (COP = 4.2)			
GPM	EWT °F	TOTAL BTUH	SENS BTUH	HEAT OF REJECTION BTUH	POWER INPUT WATTS	HEATING BTUH	HEAT OF ABSORPTION BTUH	POWER INPUT WATTS	UNIT WATER PRESSURE WATER FT H20
5.2	40	48127	30320	57980	3828	OPERATION NOT RECOMMENDED			2.8
7.6	40	48943	32030	58880	2820				5.9
10.7	40	49689	32780	58230	2675				11.7
13.8	40	49689	32780	58230	2637	35369	22563	3725	19.5
5.2	50	47521	31163	57430	3120	36315	23842	3851	2.8
7.6	50	47512	31701	57440	3053	39599	26708	3753	5.9
10.7	50	47949	32319	57630	2990	42317	28823	4017	11.7
13.8	50	48257	32506	57720	2921	43154	29601	4261	19.5
5.2	60	45968	30497	56680	3319	43946	30784	3856	2.8
7.6	60	46724	31322	56820	3271	47747	33858	4066	5.9
10.7	60	46795	31811	57229	3216	50867	35899	4385	11.7
13.8	60	47541	32232	57549	3083	52695	36915	4412	19.5
5.2	60	43800	32000	55100	3377	42100	32006	2981	2.8
7.6	60	46600	33100	55890	2867	45230	34350	3151	5.9
10.7	60	47300	34300	56570	2706	47330	36086	3302	11.7
13.8	60	48300	34300	56730	2636	48420	36777	3394	19.5
5.2	70	42500	30200	53780	3483	48630	36790	3467	2.8
7.6	70	44200	31400	54650	3238	51930	39292	3791	5.9
10.7	70	44200	32100	55180	3080	**52500**	**40822**	**3846**	**11.7**
13.8	70	45800	32600	55490	2992	55200	41676	3979	19.5
5.2	85	38900	27700	51960	4033	58500	44096	4224	2.8
7.6	85	40600	28800	52780	3794	61900	46512	4317	5.9
10.7	**85**	**41500**	**29500**	**53500**	**3705**	64500	48107	4319	11.7
13.8	85	42300	29900	53620	3557	65400	48921	4857	19.5
5.2	95	37600	26500	51250	4213				2.8
7.6	95	39200	27500	52090	3980				5.9
10.7	95	40300	28600	52600	3829				11.7
13.8	95	40700	28800	52830	3741				19.5
5.2	95	36400	25800	50640	4398				2.8
7.6	95	38300	27300	51493	4303				5.9
10.7	95	39300	27700	52000	4018				11.7
13.8	95	39500	28100	52240	3933				19.5
5.2	100	35000	19300	48820	4267				2.8
7.6	100	35600	20300	49170	4189				5.9
10.7	100	37800	30700	50500	3921				11.7
13.8	100	38300	29900	51190	3860				19.5
5.2	110	OPERATION NOT RECOMMENDED							2.8
7.6	110								5.9
10.7	110	34202	13680	47710	4171				11.7
13.8	110	34367	15030	47870	4168				19.5

Interpolation is permissible. Extrapolation is not. Bold Face = ARI Conditions

Correction Factors

For Variations In Entering Air Temperature

Cooling Corrections						* Sensible equals Total	Heating Corrections			
Entering Air °F WB	Total Cooling Capacity	Sensible Cooling Capacity Entering Dry Bulb 70° DB	75° DB	80° DB	85° DB	90° DB	Heat of Rejection	Entering Air °F DB	Heating Capacity	Heat of Absorption	Power Input Watts
61	0.930	0.763	1.030	*	*	*	0.895	60	1.025	1.047	0.965
64	0.955	0.613	0.881	1.148	*	*	0.958	65	1.010	1.025	0.990
67	1.000	0.466	0.733	1.000	1.267	*	1.002	70	1.000	1.000	1.000
70	1.045		0.585	0.852	1.118	*	1.055	75	0.985	0.977	1.040
73	1.090		0.436	0.705	0.970	1.238	1.109	80	0.965	0.955	1.065

For Variations In Entering Air Flow

	Cooling Corrections				Heating Corrections		
CFM	Total Cooling Capacity	Sensible Cooling Capacity	Heat of Rejection	Power Input Watts	Heating Capacity	Heat of Absorption	Power Input Watts
1000	0.953	0.947	0.945	0.941	0.953	0.960	1.053
1250	0.977	0.973	0.977	0.971	0.977	0.980	1.027
1375	0.988	0.987	0.993	0.984	0.988	0.990	1.013
1500	1.000	1.000	1.000	1.000	1.000	1.000	1.000
1562	1.004	1.004	1.015	1.008	1.004	1.005	0.996
1583	1.007	1.009	1.021	1.017	1.007	1.006	0.993

ClimateMaster works continually to improve its products. As a result, the design and specifications of each product at the time of order may be changed without notice and may not be as described herein. Please contact ClimateMaster's Customer Service Department at 1-405-745-6000 for specific information on the current design and specifications. Statements and other information contained herein are not express warranties and do not form the basis of any bargain between the parties, but are merely ClimateMaster's opinion or commendation of its products.

HS/HL/VS/VL Submittal Data

CLIMATEMASTER®

Contractor: _____ P.O.: _____

Engineer: _____

Project Name: _____ Unit Tag: _____

Performance Data HS/HL Horizontal & VS/VL Vertical 048

Rated Air Flow 1700 CFM

Boxed areas represent HL/VL units only.
HS/VS - Water temperature range is 60°F - 95°F
HL/VL - Water temperature range is 40°F - 110°F

		Cooling Performance - EAT 80/67°F (EER = 11.0)				Heating Performance - EAT 70°F (COP = 3.3)			
GPM	EWT °F	TOTAL BTUH	SENS BTUH	HEAT OF REJECTION BTUH	POWER INPUT WATTS	HEATING BTUH	HEAT OF ABSORPTION BTUH	POWER INPUT WATTS	UNIT WATER PRESSURE WATER FT H2O
5.9	40	54930	36689	67280	3928	OPERATION NOT RECOMMENDED			3.9
8.7	40	55852	33479	67210	3395				8.4
12.4	40	56509	37948	67780	3223				17.0
15.8	40	56771	38481	67790	3148	37182	23068	4120	27.6
5.9	50	53336	36225	66560	3778	38612	24721	4071	3.9
8.7	50	54159	37164	64219	3717	41302	27579	4192	8.4
12.4	50	54871	37789	67409	3580	44624	29588	4156	17.0
15.8	50	55135	38159	67402	3518	45713	30536	4510	27.6
5.9	60	52508	35451	66863	3406	46725	31890	4343	3.9
8.7	60	52730	36635	66650	3662	50621	34882	4581	8.4
12.4	60	52550	37311	67101	3844	53640	36890	4914	17.0
15.8	60	54517	37837	67300	3709	56457	37841	5467	27.6
5.9	69	51500	37500	64510	3717	45000	33394	3399	3.9
8.7	69	53509	39030	65430	3408	47500	35583	3608	8.4
12.4	60	54800	39900	66030	3209	49900	37076	3761	17.0
15.8	60	55400	40100	66270	3107	52900	37762	3845	27.6
5.9	70	48500	35400	63120	4150	51800	38291	3970	3.9
8.7	70	50800	36900	64070	3848	55300	40886	4224	8.4
12.4	70	51850	37800	64500	3652	57000	41974	4403	17.0
15.8	70	52550	38300	64940	3554	58900	43729	4438	27.6
5.9	85	41230	32200	60890	4998	62200	45956	4840	3.9
8.7	85	46200	33700	61880	4508	65500	47894	5152	8.4
12.4	85	47500	34600	62620	4320	67700	49414	5354	17.0
15.8	85	48300	35100	62880	4222	68800	50086	5477	27.6
5.9	90	42800	31200	60350	5014				3.9
8.7	90	44800	32700	61350	4728				8.4
12.4	90	46000	33500	61500	4542				17.0
15.8	90	46600	34000	62180	4447				27.6
5.9	95	41400	30200	59700	5231				3.9
8.7	95	43300	31000	60020	4948				8.4
12.4	95	44500	32500	61230	4784				17.0
15.8	95	45200	32900	61540	4670				27.6
5.9	100	39714	31088	56950	5078				3.9
8.7	100	40160	31495	57540	4965				8.4
12.4	100	41603	32527	57795	4625				17.0
15.8	100	42047	33168	58430	4681				27.6
5.9	110	OPERATION NOT RECOMMENDED							3.9
8.7	110								8.4
12.4	110	39147	30933	56330	4908				17.0
15.8	110	39265	31558	56460	4913				27.6

Interpolation is permissible. Extrapolation is not.

Bold Face = ARI Conditions

CORRECTION FACTORS

For Variations In Entering Air Temperature

Cooling Corrections								Heating Corrections			
						* Sensible equals Total					
Entering Air °F WB	Total Cooling Capacity	Sensible Cooling Capacity Entering Dry Bulb 70° DB	75° DB	80° DB	85° DB	90° DB	Heat of Rejection	Entering Air °F DB	Heating Capacity	Heat of Absorption	Power Input Watts
61	0.910	0.763	1.030	*	*	*	0.895	60	1.025	1.047	0.965
64	0.955	0.615	0.881	1.148	*	*	0.928	65	1.010	1.023	0.993
67	1.000	0.466	0.733	1.000	1.267	*	1.002	70	1.000	1.000	1.000
70	1.045		0.585	0.852	1.118	*	1.055	75	0.980	0.977	1.040
73	1.091		0.436	0.703	0.970	1.339	1.109	80	0.965	0.953	1.065

For Variations In Entering Air Flow

Cooling Corrections					Heating Corrections		
CFM	Total Cooling Capacity	Sensible Cooling Capacity	Heat of Rejection	Power Input Watts	Heating Capacity	Heat of Absorption	Power Input Watts
1400	0.975	0.972	0.975	0.945	0.975	0.979	1.028
1550	0.988	0.986	0.992	0.973	0.968	0.989	1.014
1625	0.994	0.993	0.996	0.985	0.994	0.995	1.007
1700	1.000	1.000	1.000	1.000	1.000	1.000	1.000
1925	1.018	1.020	1.065	1.069	1.018	1.015	0.980
2150	1.035	1.040	1.061	1.078	1.035	1.030	0.960

ClimateMaster works continually to improve its products. As a result, the design and specifications of each product at the time of order may be changed without notice and may not be as described herein. Please contact ClimateMaster's Customer Service Department at 1-405-745-6000 for specific information on the current design and specifications. Statements and other information contained herein are not express warranties and do not form the basis of any bargain between the parties, but are merely CM manufacturer's opinion or commendation of its products.

HS/HL/VS/VL Submittal Data

CLIMATEMASTER®

Contractor: _____ P.O.: _____

Engineer: _____

Project Name: _____ Unit Tag: _____

Performance Data HS/HL Horizontal & VS/VL Vertical 060

Rated Air Flow 3000 CFM

Boxed areas represent HL/VL units only.
HS/VS - Water temperature range is 60°F - 95°F
HL/VL - Water temperature range is 40°F - 110°F

		Cooling Performance - EAT 80/67°F (EER = 11.2)				Heating Performance - EAT 70°F (COP = 3.8)			
GPM	EWT °F	TOTAL BTUH	SENS BTUH	HEAT OF REJECTION BTUH	POWER INPUT WATTS	HEATING BTUH	HEAT OF ABSORPTION BTUH	POWER INPUT WATTS	UNIT WATER PRESSURE WATER FT H20
7.8	40	72263	49247	87930	4587	OPERATION NOT RECOMMENDED			3.9
11.4	40	72992	50358	87850	4350				8.4
16.2	40	73759	73759	87810	4115				17.0
20.7	40	74121	51439	88000	1062	48827	30429	5395	27.8
7.8	50	70301	48225	87290	4968	50841	32565	5356	3.9
11.4	50	70858	49736	87460	4865	55144	36466	5506	8.4
16.2	50	71921	50562	87650	4615	58730	38627	5881	17.0
20.7	50	72060	50980	88080	4530	60197	39651	5935	27.8
7.8	60	68702	47682	86500	5210	61524	42342	5713	3.9
11.4	60	68957	48893	86610	5174	66491	45842	6016	8.4
16.2	60	69919	49922	86720	4927	70586	48519	6470	17.0
20.7	60	70917	50550	87140	4918	74383	49784	7194	27.8
7.8	60	67300	47338	83510	4747	59290	43992	4456	3.9
11.4	60	69800	49697	84713	4268	53180	46611	4746	8.4
16.2	60	71500	50293	85550	4134	63930	48762	4948	17.0
20.7	60	72301	50856	85900	3983	67100	49789	5060	27.8
7.8	70	63600	45336	81710	5303	68205	50505	5290	3.9
11.4	70	66130	47638	82940	4920	72401	53400	5569	8.4
16.2	70	67630	48368	83610	4684	75000	55223	5792	17.0
20.7	70	68500	49368	84080	4555	76900	56304	5919	27.8
7.8	85	58100	43205	78960	6136	81900	60216	6378	3.9
11.4	85	60400	45106	80130	5776	86200	63059	6778	8.4
16.2	85	62000	46295	80910	5539	89100	64962	7037	17.0
20.7	85	62800	46893	81390	5414	90600	66033	7206	27.8
7.8	90	56100	42378	78030	6414				3.9
11.4	90	58500	44191	79190	6058				8.4
16.2	90	60020	45324	79860	5823				17.0
20.7	90	60920	46004	80370	5701				27.8
7.8	95	54330	41460	77160	6602				3.9
11.4	95	56700	42524	78350	6341				8.4
16.2	95	58203	44471	79050	6108				17.0
20.7	95	59003	45082	79450	5987				27.8
7.8	100	52113	39602	74290	6493				3.9
11.4	100	53503	42159	74979	6272				8.4
16.2	100	56303	43522	74663	5980				17.0
20.7	100	54397	41312	75493	5870				27.8
7.8	110	OPERATION NOT RECOMMENDED							3.9
11.4	110								8.4
16.2	110	51097	41388	72720	6330				17.0
20.7	110	51763	42161	72910	6335				27.8

Interpolation is permissible. Extrapolation is not.

Bold Face = ARI Conditions

CORRECTION FACTORS

For Variations In Entering Air Temperature

	Cooling Corrections					* Sensible equals Total		Heating Corrections			
Entering Air °F WB	Total Cooling Capacity	Sensible Cooling Capacity Entering Dry Bulb 70° DB	75° DB	80° DB	85° DB	90° DB	Heat of Rejection	Entering Air °F DB	Heating Capacity	Heat of Absorption	Power Input Watts
61	0.910	0.763	1.030	1.297	*	*	0.895	60	1.025	1.017	0.965
64	0.955	0.615	0.881	1.148	*	*	0.948	65	1.010	1.023	0.990
67	1.000	0.466	0.733	1.000	1.267	*	1.000	70	0.995	1.030	1.015
70	1.045		0.585	0.852	1.118	*	1.055	75	0.980	0.977	1.040
72	1.093		0.436	0.703	0.970	1.129	1.109	80	0.965	0.952	1.065

For Variations In Entering Air Flow

	Cooling Corrections				Heating Corrections		
CFM	Total Cooling Capacity	Sensible Cooling Capacity	Heat of Rejection	Power Input Watts	Heating Capacity	Heat of Absorption	Power Input Watts
1700	0.979	0.976	0.980	0.954	0.979	0.982	1.024
1850	0.990	0.988	0.990	0.977	0.990	0.991	1.012
2000	1.000	1.000	1.000	1.000	1.000	1.000	1.000
2065	1.005	1.005	1.007	1.010	1.005	1.004	0.995
2130	1.009	1.010	1.013	1.020	1.009	1.008	0.990
2280	1.018	1.020	1.025	1.035	1.018	1.015	0.980

ClimateMaster works continually to improve its products. As a result, the design and specifications of each product at the time of order may be changed without notice and may not be as described herein. Please contact ClimateMaster's Customer Service Department at 1-405-745-6000 for specific information on the current design and specifications. Statements and other information contained herein are not express warranties and do not form the basis of any bargain between the parties, but are merely ClimateMaster's opinion or commendation of its products.

HS/HL Submittal Data

CLIMATEMASTER®

Contractor: P.O.:

Engineer:

Project Name: Unit Tag:

Performance Data
HS/HL Horizontal 072

Rated Air Flow 2400 CFM

Boxed areas represent HL units only.
HS - Water temperature range is 60°F - 95°F
HL - Water temperature range is 40°F - 110°F

		Cooling Performance - EAT 80/67°F (EER = 11.0)				Heating Performance - EAT 70°F (COP = 3.9)			
GPM	EWT °F	TOTAL BTUH	SENS BTUH	HEAT OF REJECTION BTUH	POWER INPUT WATTS	HEATING BTUH	HEAT OF ABSORPTION BTUH	POWER INPUT WATTS	UNIT WATER PRESSURE WATER FT H20
9.9	40	83246	54960	93768	4842	OPERATION NOT RECOMMENDED			3.5
14.4	40	84322	55537	98047	4667				7.1
18.3	40	83255	56027	100563	4536				10.2
23.4	40	86125	56691	101206	4317	70910	50413	6002	14.3
9.9	50	79849	53709	97814	5265	71937	51017	6126	3.5
14.4	50	80925	54286	98294	5050	73855	52349	6180	7.1
18.3	50	81858	54786	98709	4939	75407	54250	6237	10.2
23.4	50	83078	55440	99252	4740	77671	56173	6299	14.3
9.9	60	76587	52600	96050	5614	77000	55324	6350	3.5
14.4	60	77528	53035	96340	5513	80506	58530	6467	7.1
18.3	60	78461	53535	96755	5362	82258	60282	6514	10.2
23.4	60	79308	54005	96181	5182	84000	61519	6580	14.3
9.9	69	73251	51548	94129	5531	79310	56954	6543	3.5
14.4	69	73977	51974	94413	5403	83014	60286	6661	7.1
18.3	69	74892	52464	94829	5255	84726	61833	6759	10.2
23.4	69	76930	53312	94257	5078	86520	63395	6777	14.3
9.9	70	73035	51207	93907	6112	85930	62703	6740	3.5
14.4	70	74131	51784	94460	5896	87357	64312	6754	7.1
18.3	70	74950	52900	94340	5696	91000	67676	6836	10.2
23.4	70	76284	52938	95344	5586	91193	69776	6863	14.3
9.9	85	57400	49500	90458	6758	95381	71253	7130	3.5
14.4	85	60036	49928	91456	6573	97498	72988	7185	7.1
18.3	85	70000	49975	93712	6363	101000	76297	7240	10.2
23.4	85	71000	51100	92335	6253	101334	78449	7393	14.3
9.9	90	66261	48305	90030	6957				3.5
14.4	90	67357	48232	90479	6782				7.1
18.3	90	69409	49769	91010	6432				10.2
23.4	90	69490	50436	91437	6332				14.3
9.9	95	63400	48099	87888	7177				3.5
14.4	95	65639	48557	89502	6994				7.1
18.3	95	66572	49157	89917	6842				10.2
23.4	95	68531	50100	91468	6720				14.3
9.9	100	53854	47454	88046	7381				3.5
14.4	100	62950	48031	88525	7205				7.1
18.3	100	54873	48531	88940	7054				10.2
23.4	100	56093	49185	89483	6855				14.3
9.9	110	OPERATION NOT RECOMMENDED							3.5
14.4	110								7.1
18.3	110	61518	45873	86251	7156				10.2
23.4	110	63505	46730	86465	7205				14.3

Interpolation is permissible. Extrapolation is not.

Bold Face = ARI Conditions

CORRECTION FACTORS

For Variations In Entering Air Temperature

Cooling Corrections — * Sensible equals Total

Entering Air °F WB	Total Cooling Capacity	Sensible Cooling Capacity Entering Dry Bulb 70° DB	75° DB	80° DB	85° DB	90° DB	Heat of Rejection
61	0.910	0.871	1.072	1.243	*	*	0.956
64	0.955	0.702	0.919	1.136	*	*	0.978
67	1.000	0.532	0.766	1.000	1.221	*	1.000
70	1.045		0.611	0.864	1.101	1.234	1.021
73	1.090		0.455	0.727	0.981	1.252	1.043

Heating Corrections

Entering Air °F DB	Heating Capacity	Heat of Absorption	Power Input Watts
60	1.035	1.052	0.948
65	1.018	1.026	0.974
70	1.000	1.000	1.000
75	0.984	0.982	1.040
80	0.969	0.965	1.081

For Variations In Entering Air Flow

CFM	Cooling Corrections: Total Cooling Capacity	Sensible Cooling Capacity	Heat of Rejection	Power Input Watts	Heating Corrections: Heating Capacity	Heat of Absorption	Power Input Watts
1800	0.986	0.940	0.948	0.978	0.985	0.928	1.022
2100	0.968	0.970	0.974	0.991	0.967	0.983	1.011
2250	0.984	0.985	0.987	0.998	0.984	0.983	1.006
2400	1.000	1.000	1.000	1.000	1.000	1.000	1.000
2700	1.033	1.030	1.026	1.018	1.034	1.038	0.985
3000	1.065	1.050	1.050	1.032	1.070	1.077	0.979

ClimateMaster works continually to improve its products. As a result, the design and specifications of each product at the time of order may be changed without notice and may not be as described herein. Please contact ClimateMaster's Customer Service Department at 1-405-743-6000 for specific information on the current design and specifications. Statements and other information contained herein are not express warranties and do not form the basis of any bargain between the parties, nor are they ClimateMaster's opinion or recommendation of its products.

HS/HL Submittal Data

CLIMATEMASTER

Contractor: _____ P.O.: _____

Engineer: _____

Project Name: _____ Unit Tag: _____

Performance Data
HS/HL Horizontal 096

Rated Air Flow 3400 CFM

Boxed areas represent HL units only.
HS - Water temperature range is 60°F - 95°F
HL - Water temperature range is 40°F - 110°F

Cooling Performance - EAT 80/67°F ; EER = 13.0 — Heating Performance - EAT 70°F ; COP = 3.8

GPM	EWT °F	TOTAL BTUH	SENS BTUH	HEAT OF REJECTION BTUH	POWER INPUT WATTS	HEATING BTUH	HEAT OF ABSORPTION BTUH	POWER INPUT WATTS	UNIT WATER PRESSURE WATER FT H20
11.9	40	111108	73721	134790	6890	OPERATION NOT RECOMMENDED			4.4
17.4	40	111905	75070	134930	6760				9.5
24.8	40	113677	75891	135100	6477				19.3
31.7	40	115460	76962	135380	6366	74133	46124	8384	31.5
11.9	50	107164	72788	133350	7791	77286	49504	8144	4.4
17.4	50	108823	74189	134190	7569	82804	55245	8266	9.5
24.8	50	109741	75578	134249	7180	89132	58652	8551	19.3
31.7	50	110385	76318	134390	7934	91359	60306	9001	31.5
11.9	60	105492	71232	133150	8110	93525	63603	8887	4.4
17.4	60	105638	73178	133290	8089	101048	69861	9141	9.5
24.8	60	107121	74623	133400	7719	107202	73626	9826	19.3
31.7	60	108747	75074	134050	7316	112891	75805	10320	31.5
11.9	62	103200	75920	128520	7418	98301	66878	6787	4.4
17.4	60	107200	78330	130413	6812	95900	71340	7211	9.5
24.8	60	109700	80000	131564	6419	99800	74152	7519	19.3
31.7	60	113000	80900	132189	6313	101800	75805	7688	31.5
11.9	70	95300	71100	125723	8284	103800	76596	7950	4.4
17.4	70	101400	73800	127628	7697	109800	81084	8437	9.5
24.8	70	105900	75700	127968	7308	114000	83948	8801	19.3
31.7	70	108200	76700	128302	7106	116200	85432	8993	31.5
11.9	85	88800	64700	120268	9583	124900	91511	9692	4.4
17.4	85	92600	67500	122235	9015	131800	95874	10298	9.5
24.8	85	95000	69200	123876	8640	135300	98704	10734	19.3
31.7	85	96300	70200	124581	8441	137500	100172	11052	31.5
11.9	90	85900	62600	119446	9926				4.4
17.4	90	89700	65400	121365	9455				9.5
24.8	90	93100	67100	123760	9084				19.3
31.7	90	95400	68300	125472	8861				31.5
11.9	95	82900	60500	118553	10448				4.4
17.4	95	86800	63300	120495	9885				9.5
24.8	95	89200	65000	122671	9528				19.3
31.7	95	90500	65900	123362	9337				31.5
11.9	105	77200	56300	115387	11314				4.4
17.4	105	80900	59100	117629	10774				9.5
24.8	105	82400	60800	119915	10417				19.3
31.7	105	84600	61700	119909	10230				31.5
11.9	110	OPERATION NOT RECOMMENDED							4.4
17.4	110								9.5
24.8	110	78293	57345	115195	10358				19.3
31.7	110	78612	58019	115179	10349				31.5

Interpolation is permissible. Extrapolation is not.

Bold Face - ARI Conditions

CORRECTION FACTORS

For Variations In Entering Air Temperature

Entering Air °F WB	Cooling Corrections: Total Cooling Capacity	Sensible Cooling Capacity Entering Dry Bulb 70° DB	75° DB	80° DB	85° DB	90° DB	Heat of Rejection	Heating Corrections: Entering Air °F DB	Heating Capacity	Heat of Absorption	Power Input Watts
61	0.910	0.763	1.030	–	*	*	0.885	60	1.025	1.047	0.955
64	0.955	0.615	0.881	1.148	*	*	0.948	65	1.013	1.025	0.990
67	1.000	0.456	0.733	1.000	1.267	*	1.002	70	1.000	1.000	1.000
70	1.045		0.585	0.852	1.118	*	1.055	75	0.980	0.977	1.040
73	1.080		0.438	0.703	0.970	1.139	1.109	80	0.965	0.953	1.085

* Sensible equals Total

For Variations In Entering Air Flow

CFM	Cooling Corrections: Total Cooling Capacity	Sensible Cooling Capacity	Heat of Rejection	Power Input Watts	Heating Corrections: Heating Capacity	Heat of Absorption	Power Input Watts
2800*	0.975	0.972	0.975	0.945	0.975	0.979	1.025
3100	0.988	0.986	0.992	0.973	0.988	0.989	1.014
3250	0.994	0.993	0.996	0.986	0.994	0.995	1.007
3400	1.000	1.000	1.000	1.000	1.000	1.000	1.000
3600	1.016	1.019	1.014	1.036	1.016	1.014	0.981
4200	1.035	1.038	1.037	1.073	1.033	1.028	0.962

* HL Only

ClimateMaster works continually to improve its products. As a result, the design and specifications of each product at the time of order may be changed without notice and may not be as described herein. Please contact ClimateMaster's Customer Service Department at 1-405-745-6000 for specific information on the current design and specifications. Statements and other information contained herein are not express warranties and do not form the basis of any bargain between the parties, but are merely ClimateMaster's opinion or commendation of its products.

HS/HL Submittal Data

CLIMATEMASTER™

Contractor: _____ P.O.: _____

Engineer: _____

Project Name: _____ Unit Tag: _____

Performance Data
HS/HL Horizontal 120

Rated Air Flow 4000 CFM

Boxed areas represent HL units only.
HS - Water temperature range is 60°F - 95°F
HL - Water temperature range is 40°F - 110°F

		Cooling Performance - EAT 80/67°F (EER = 11.2)				Heating Performance - EAT 70°F (COP = 3.8)			
GPM	EWT °F	TOTAL BTUH	SENS BTUH	HEAT OF REJECTION BTUH	POWER INPUT WATTS	HEATING BTUH	HEAT OF ABSORPTION BTUH	POWER INPUT WATTS	UNIT WATER PRESSURE WATER FT H20
15.5	40	142400	96965	174500	9430	OPERATION NOT RECOMMENDED			5.4
22.7	40	144861	98648	177700	9729				11.6
32.4	40	147517	99806	175600	9230				23.6
41.3	40	148360	101582	175970	8950	97532	60737	10773	38.4
15.5	50	136199	95738	170810	10055	101558	65023	10967	5.4
22.7	50	139716	97819	172250	9532	110224	72640	11019	11.6
32.4	50	143241	99587	174400	9130	117327	77274	11349	23.6
41.3	50	144082	100236	174670	8963	120195	79309	11846	38.4
15.5	60	132638	93692	165300	9556	132898	83933	11422	5.4
22.7	60	135874	95161	167700	9361	132896	91822	12069	11.6
32.4	60	139821	98125	169700	8754	141034	96876	12916	23.6
41.3	60	141047	99399	171700	8738	148524	99533	14360	38.4
15.5	80	124600	98800	167400	9509	118200	87808	8822	5.4
22.7	80	129700	102500	170135	8738	126030	93751	9486	11.6
32.4	80	142900	104500	171882	8227	131200	97524	9896	23.6
41.3	80	144800	105100	172221	7966	133600	99327	10116	38.4
15.5	70	127100	93300	165758	10639	136200	100673	10450	5.4
22.7	70	132300	97000	166504	9866	144600	106993	11139	11.6
32.4	70	135400	99400	167184	9366	150000	110484	11582	23.6
41.3	70	137000	100500	167678	9112	152800	112336	11834	38.4
15.5	85	119800	85100	156782	12286	163600	120203	12739	5.4
22.7	85	122850	88700	159418	11557	172300	126999	13545	11.6
32.4	85	124000	91000	161838	11076	178000	130934	14112	23.6
41.3	85	125700	92300	162939	10830	180610	132797	14412	38.4
15.5	90	113700	82350	155609	12841				5.4
22.7	90	117850	85905	158133	12122				11.6
32.4	90	120200	88205	160380	11616				23.6
41.3	90	121800	89450	162864	11403				38.4
15.5	95	108400	79600	152457	13396				5.4
22.7	95	113300	83100	157197	12686				11.6
32.4	95	116400	85400	158922	12215				23.6
41.3	95	118100	86700	159938	11975				38.4
15.5	105	101000	74100	150815	14508				5.4
22.7	105	105800	77600	153452	13814				11.6
32.4	105	108900	79900	155388	13355				23.6
41.3	105	110700	81200	156701	13120				38.4
15.5	110	OPERATION NOT RECOMMENDED							5.4
22.7	110								11.6
32.4	110	102193	75039	150078	12772				23.6
41.3	110	102612	75070	150451	12786				38.4

Interpolation is permissible. Extrapolation is not.

Bold Face = ARI Conditions

Correction Factors

For Variations In Entering Air Temperature

	Cooling Corrections					* Sensible equals Total	Heating Corrections			
Entering Air °F WB	Total Cooling Capacity	Sensible Cooling Capacity Entering Dry Bulb 70° DB	75° DB	80° DB	85° DB	90° DB	Heat of Rejection	Entering Air °F DB	Heating Capacity	Heat of Absorption	Power Input Watts
61	0.919	0.763	1.030	*	*	*	0.895	60	1.035	1.047	0.965
64	0.955	0.615	0.881	1.145	*	*	0.948	65	1.010	1.022	0.993
67	1.000	0.466	0.725	1.000	1.267	*	1.002	70	1.000	1.000	1.000
70	1.045		0.585	0.852	1.118	*	1.055	75	0.980	0.977	1.040
73	1.090		0.436	0.703	0.970	1.139	1.159	80	0.965	0.953	1.065

For Variations In Entering Air Flow

	Cooling Corrections				Heating Corrections		
CFM	Total Cooling Capacity	Sensible Cooling Capacity	Heat of Rejection	Power Input Watts	Heating Capacity	Heat of Absorption	Power Input Watts
3200	0.972	0.968	0.970	0.928	0.972	0.976	1.032
3600	0.986	0.984	0.990	0.969	0.986	0.988	1.015
3800	0.993	0.992	0.994	0.985	0.993	0.994	1.008
4000	1.000	1.000	1.000	1.000	1.000	1.000	1.000
4200	1.007	1.008	1.009	1.016	1.007	1.006	0.992
4400	1.014	1.016	1.019	1.031	1.014	1.012	0.984

ClimateMaster works continually to improve its products. As a result, the design and specifications of each product at the time of order may be changed without notice and may not be described herein. Please contact ClimateMaster's Customer Service Department at 1-405-745-6000 for specific information on the current design and specifications. Statements and other information contained herein are not express warranties and do not form the basis of any bargain between the parties, but are merely ClimateMaster's opinion or commendation of its products.

HS/HL/VS/VL Submittal Data

CLIMATEMASTER®

Blower Performance

Contractor: _____ *P.O.:* _____

Engineer: _____

Project Name: _____ *Unit Tag:* _____

HS/HL 006 - 060, VS/VL 009 - 060

Based on wet air coil and clean air filter. * Factory connected tap. Field connection required to other taps.

Size	Fan Speed	CFM External Static Pressure (in wg.) 0.10	0.20	0.30	0.40	0.50	0.60	0.70	0.80	0.90	1.00	Minimum CFM	Maximum CFM
006	HI	320	285	250	220	175						165	320
	MED*	255	235	215	190								
	LO	245	225	205	165								
009	HI	375	335	295	258							225	375
	MED*	340	315	280	245								
	LO	335	300	265	235								
012	HI	435	400	365	325	300						290	435
	MED*	385	360	330	305								
	LO	320	305	290									
015	HI	620	585	555	530	505	475					450	620
	MED*	530	505	490	465	450							
	LO	450											
019	HI	730	705	660	630	570						550	730
	MED*	630	625	585	550								
	LO	560											
024	HI	1105	1050	980	920	830	700					620	1105
	MED*	955	910	850	770	695							
	LO	845	780	695	640								
030	HI	1190	1150	1085	1005	925	830	750				750	1190
	MED*	1130	1070	1005	930	845	760						
	LO	1005	965	910	850	760							
036	HI	1500	1430	1340	1250	1170	1080	990				900	1500
	MED*	1360	1310	1250	1150	1110	1000	900					
	LO	1290	1240	1190	1120	1030	930						
042	HI	1580	1510	1425	1340	1250	1165	1080				1000	1580
	MED*	1490	1415	1335	1255	1170	1085						
	LO	1310	1170	1125	1080	1040	1000						
048	HI	2130	2050	1960	1860	1750	1630	1470				1400	2130
	MED*	1980	1930	1810	1720	1620	1520	1400					
	LO	1830	1730	1650	1570	1490	1400						
060	HI	2200	2140	2080	2010	1940	1860	1740				1700	2200
	MED*	2110	2050	2000	1940	1870	1800	1730					
	LO	2050	2000	1940	1880	1820	1760	1700					
060 High Static	HI						2195	2068	1940	1754		1700	2200
	MED*		2107	2073	2058	2038	1950	1862	1735				
	LO	1910	1950	1940	1911	1862	1791	1725					

HS/HL 072

Based on wet coil and clean air filter

Maximum CFM 3000

Minimum CFM 1600 HS
Minimum CFM 1600 HL

SCFM Air Flow		CFM EXTERNAL STATIC PRESSURE (in wg.) 0.2	0.3	0.4	0.5	0.6	0.7	0.8	0.9	1	1.1	1.2	1.3	1.4	1.5
1600	BHP	0.335	0.378	0.424	0.472	0.524									
	RPM	559	646	692	727	781									
	Turns Out	3	2	1.5	5	4									
2000	BHP	0.425	0.474	0.524	0.575	0.629	0.683	0.739							
	RPM	637	682	723	766	807	849	890							
	Turns Out	2.5	1.5	0.5	4.5	3.5	3	2							
2200	BHP	0.539	0.586	0.639	0.693	0.749	0.808	0.870	0.934	1.001					
	RPM	678	718	759	795	834	871	907	942	978					
	Turns Out	1.5	1	4.5	4	3	2.5	1.5	1	0.5					
2400	BHP	0.676	0.726	0.782	0.837	0.895	0.955	1.017	1.081	1.148	1.216				
	RPM	724	759	791	829	863	897	931	964	997	1029				
	Turns Out	3.5	4.5	4	3	2.5	2	1	0.5		3.5				
2600	BHP	0.833	0.890	0.949	1.009	1.072	1.136	1.201	1.268	1.337	1.406	1.485	1.554	1.630	
	RPM	765	805	845	869	902	934	966	997	1029	1059	1090	1120	1151	
	Turns Out	4.5	3.5	3	2.5	1.5	1	0.5		3.5	3.5	3	2.5	2	
2800	BHP	1.014	1.075	1.137	1.201	1.267	1.334	1.403	1.474	1.546	1.619	1.693	1.769	1.846	1.924
	RPM	811	845	876	905	939	969	1000	1029	1059	1088	1117	1145	1174	1202
	Turns Out	3.5	3	2	1.5	1	0.5	4	3.5	3.5	3	2.5	2	1.5	1
3000	BHP	1.218	1.283	1.350	1.419	1.487	1.558	1.630	1.703	1.777	1.853	1.931	OPERATION NOT RECOMMENDED		
	RPM	856	887	918	949	977	1006	1035	1062	1092	1112	1145			
	Turns Out	2.5	2	1.5	1	0.5	4	3.5	3	3	2	2			

OPERATION NOT RECOMMENDED

A B C D

A=Standard Sheave RPM range
B=Low RPM sheave range
C=High RPM sheave range
D=High RPM sheave range with 2 HP Motor

ClimateMaster works continually to improve its products. As a result, the design and specifications of each product at the time of order may be changed without notice and may not be as described herein. Please contact ClimateMaster's Customer Service Department at 1-405-745-6000 for specific information on the current design and specifications. Statements and other information contained herein are not express warranties and do not form the basis of any bargain between the parties, but are merely ClimateMaster's opinion or commendation of its products.

HS/HL Submittal Data

CLIMATEMASTER

Blower Performance

Contractor: _____ *P.O.:* _____

Engineer: _____

Project Name: _____ *Unit Tag:* _____

HS/HL 096

Based on wet air coil and clean air filter.

Maximum CFM 4200 Minimum CFM 3000 HS
Minimum CFM 2800 HL

SCFM Air Flow		CFM External Static Pressure (in wg.)													
		0.20	0.30	0.40	0.50	0.60	0.70	0.80	0.90	1.00	1.10	1.20	1.30	1.40	1.50
2800	BHP	0.80	0.87	0.94	1.06	1.09	1.16	1.21	1.30	1.37	1.45	1.52	1.43	1.49	1.56
	RPM	980	1023	1061	1105	1141	1183	1220	1256	1292	1327	1362	1398	1434	1466
	Turns Out		3.0	4.5	4.0	3.0	2.5	1.5		0.5	2.5	2.0	2.0	1.5	1.0
3200	BHP	0.91	1.01	1.08	1.21	1.23	1.30	1.37	1.44	1.33	1.59	1.66	1.62	1.36	1.61
	RPM	1034	1074	1114	1153	1193	1228	1264	1299	1340	1368	1402	1435	1470	1506
	Turns Out	5.0	4.5	3.5	3.0	2.0	1.5	1.0	0.0	3.0	2.5	2.0	1.5	1.0	
3400	BHP	1.09	1.16	1.23	1.29	1.36	1.45	1.49	1.56	1.63	1.70	1.77	1.83	1.98	
	RPM	1094	1133	1172	1209	1246	1282	1317	1351	1386	1419	1452	1484	1515	
	Turns Out	4.0	3.5	2.5	2.0	1.0	0.5	0.0	3.0	2.5	2.0	1.5	1.0	0.5	
3600	BHP	1.27	1.34	1.42	1.55	1.55	1.62	1.69	1.76	1.83	1.91	1.98			
	RPM	1143	1180	1216	1252	1287	1322	1356	1389	1422	1454	1486			
	Turns Out	3.0	2.5	2.0	1.5	1.0	0.5	3.0	2.5	2.0	1.5	1.0			
3800	BHP	1.46	1.53	1.60	1.65	1.74	1.80	1.87	1.94						
	RPM	1196	1234	1268	1303	1337	1370	1403	1435						
	Turns Out	2.0	5.0	4.5	4.0	3.0	2.5	2.0	1.5						
4000	BHP	1.68	1.74	1.81	1.96	1.94									
	RPM	1254	1288	1321	1354	1387									
	Turns Out	4.5	4.0	3.5	3.0	2.5									
4200	BHP	1.91	1.97												
	RPM	1310	1342												
	Turns Out	3.5	3.0												

A = Standard sheave RPM
B = Low RPM sheave range
C = High RPM sheave range

HS/HL 120

Based on wet air coil and clean air filter.

Maximum CFM 4400 Minimum CFM 3200 HS
Minimum CFM 2800 HL

SCFM Air Flow		CFM External Static Pressure (in wg.)													
		0.20	0.30	0.40	0.50	0.60	0.70	0.80	0.90	1.00	1.10	1.20	1.30	1.40	1.50
3200	BHP	0.80	0.85	0.91	0.96	1.01	1.06	1.11	1.16	1.21	1.26	1.30	1.36	1.41	1.46
	RPM	978	1009	1049	1090	1098	1126	1153	1180	1207	1232	1258	1282	1306	1329
	Turns Out	3.5	2.5	2.0	4.5	4.0	3.5	3.0	2.5	2.0	1.5	1.0	0.5	0.0	3.5
3400	BHP	0.94	0.99	1.05	1.10	1.15	1.20	1.24	1.29	1.35	1.40	1.14	1.19	1.54	1.59
	RPM	1031	1061	1090	1119	1146	1173	1199	1225	1250	1275	1300	1323	1347	1369
	Turns Out	2.5	4.5	4.0	3.5	3.0	2.5	2.0	1.5	1.0	0.5	0.0	3.5	3.0	2.5
3600	BHP	1.10	1.15	1.20	1.25	1.30	1.35	1.39	1.45	1.50	1.55	1.59	1.64	1.69	1.74
	RPM	1085	1113	1141	1168	1195	1221	1246	1270	1295	1319	1343	1366	1388	1410
	Turns Out	4.5	3.5	3.0	2.5	2.0	1.5	1.0	0.5	0.0	3.5	3.0	3.0	2.5	2.0
3800	BHP	1.29	1.32	1.37	1.42	1.47	1.53	1.56	1.61	1.66	1.71	1.75	1.80	1.85	1.90
	RPM	1139	1166	1193	1219	1244	1269	1293	1317	1341	1364	1387	1409	1431	1452
	Turns Out	2.0	2.5	2.0	1.5	1.0	0.5	0.0	3.5	3.0	3.0	2.5	2.0	1.5	1.5
4000	BHP	1.46	1.51	1.56	1.61	1.65	1.70	1.74	1.79	1.84	1.89	1.95	1.97		
	RPM	1193	1219	1245	1270	1294	1318	1341	1364	1387	1410	1432	1453		
	Turns Out	2.0	1.5	1.0	0.5	0.0	3.5	3.0	3.0	2.5	2.0	1.5	1.5		
4200	BHP	1.67	1.72	1.76	1.81	1.86	1.90	1.94	1.98						
	RPM	1248	1272	1295	1321	1344	1368	1389	1412						
	Turns Out	1.0	0.5	0.0	3.5	3.0	2.5	2.5	2.0						
4400	BHP	1.90	1.94	1.99											
	RPM	1303	1326	1350											
	Turns Out	0.0	3.5	3.0											

A = Standard sheave RPM
B = Low RPM sheave range
C = High RPM sheave range

ClimateMaster works continually to improve its products. As a result, the design and specifications of each product at the time of order may be changed without notice, and may not be as detailed as notice. Please contact ClimateMaster's Customer Service Department at 1-405-745-6000 for specific information on the current design and specifications. Statement in ClimateMaster information contained herein are not express warranties and do not form the basis of any bargain between the parties, but are merely ClimateMaster's opinion or commendation of its products.

HS/HL/VS/VL Submittal Data

CLIMATEMASTER®

Electrical Data

Contractor: _____ *P.O.:* _____

Engineer: _____

Project Name: _____ *Unit Tag:* _____

HS/HL 006-060 VS/VL 009-060

208/230 VOLTAGE IS FACTORY TAPPED AT 208V. Field switching for transformer lead for 230V.

SIZE	MODEL	VOLTS	PHASE	MIN. CRKT. AMP.	MAX. FUSE/ HACR BRKR.	MAX. CRKT. BRKR (CANADA)	LRA COMP. (EA)	RLA COMP. (EA)	BLOWER FLA	TOTAL FLA	BLOWER HP
006	HS/HL	208/230	1	3.8	15	15	15.9	2.8	0.34	2.14	1/25
		265	1	3.6	15	15	12.7	3.6	0.34	2.94	1/25
009	HS/HL VS/VL	115	1	10.5	15	15	40.0	7.0	1.7	7.00	1/8
		208/230	1	5.2	15	15	20.0	3.5	0.80	4.30	1/10
		265	1	4.8	15	15	16.0	3.1	0.90	4.00	1/6
012	HS/HL VS/VL	208/230	1	6.6	15	15	31.2	4.6	0.89	5.40	1/10
		265	1	6.2	15	15	27.0	4.2	0.95	5.10	1/6
015	HS/HL VS/VL	208/230	1	8.0	15	15	31.2	5.5	1.1	6.42	1/10
		265	1	7.0	15	15	27.0	4.8	1.0	5.82	1/10
019	HS/HL VS/VL	208/230	1	11.7	15	15	48.5	8.0	1.20	9.2	1/8
		265	1	9.7	15	15	41.0	7.1	0.90	8.0	1/8
024	HS/HL VS/VL	208/230	1	12.5	20	20	49.0	8.1	1.50	10.2	1/4
		265	1	10.9	20	20	46.5	7.1	1.30	9.6	1/4
030	HS/HL VS/VL	208/230	1	16.1	25	25	60.0	11.2	1.60	12.8	1/4
		265	1	14.2	20	20	58.0	10.3	1.40	11.7	1/4
		208/230	3	10.1	15	15	50.0	6.4	1.50	8.0	1/4
		460	3	4.8	15	15	25.0	3.2	0.80	4.0	1/4
036	HS/HL VS/VL	208/230	1	22.6	35	35	78.0	15.5	3.20	18.7	1/2
		265	1	20.8	30	30	73.8	14.3	3.20	17.5	1/2
		208/230	3	16.5	25	25	59.5	10.6	3.20	13.8	1/2
		460	3	7.6	15	15	32.8	4.6	1.80	6.40	1/2
042	HS/HL VS/VL	208/230	1	25.3	40	40	88.0	17.7	3.20	20.9	1/2
		208/230	3	17.7	25	25	65.1	11.5	3.20	14.7	1/2
		460	3	8.3	15	15	32.8	5.1	1.80	6.90	1/2
048	HS/HL VS/VL	208/230	1	22.3	50	50	95.4	21.5	5.40	26.9	3/4
		208/230	3	22.7	35	35	82.0	13.8	5.40	19.2	3/4
		460	3	10.9	15	15	41.0	6.9	2.20	9.10	3/4
		575	3	8.3	15	15	36.0	5.4	1.40	6.80	3/4
060	HS/HL VS/VL	208/230	1	40.3	50	60	135.0	27.6	5.80	33.4	1
		208/230	3	26.8	40	40	90.0	16.1	5.80	21.9	1
		460	3	12.3	15	15	45.0	7.7	2.80	10.3	1
		575	3	10.3	15	15	42.0	6.4	2.30	8.70	1

HS/HL Models 072-120 (Belt Driven Units)

SIZE	MODEL	VOLTS	PHASE	MAX. MIN. CRKT. AMP.	MAX. FUSE/ HACR BRKR.	CRKT. BRKR. (CANADA)	LRA COMP. (EA)	RLA COMP. (EA)	BLOWER FLA	TOTAL FLA	BLOWER HP*
072	HS/HL	208/230	3	29.6	40	40	59.5(2)	10.6(2)	5.3	26.9	1 1/2
		460	3	13.0	15	15	22.8(2)	4.6(2)	2.6	11.8	1 1/2
		208/230	3	31.5	40	40	59.5(2)	10.6(2)	7.5	38.7	2*
		460	3	13.8	20	15	32.8(2)	4.6(2)	3.4	12.6	2*
096	HS/HL	208/230	3	36.3	50	50	82.0(2)	13.8(2)	5.7	33.3	1 1/2
		460	3	18.6	25	25	41.0(2)	6.9(2)	2.6	16.4	1 1/2
		575	3	15.2	15	15	36.0(2)	5.4(2)	1.9	12.1	1 1/2
		208/230	3	38.6	50	50	82.0(2)	13.8(2)	7.5	35.1	2*
		460	3	19.4	25	25	41.0(2)	6.9(2)	3.4	17.2	2*
		575	3	14.0	20	20	36.0(2)	5.4(2)	2.5	12.7	2*
120	HS/HL	208/230	3	43.7	60	60	90.0(2)	16.1(2)	7.5	39.7	2
		460	3	20.7	25	25	45.0(2)	7.7(2)	3.4	18.8	2
		575	3	16.9	20	20	36.0(2)	6.4(2)	2.5	15.5	2
		208/230	3	46.8	60	60	90.0(2)	16.1(2)	8.6	40.8	3*
		460	3	21.6	30	20	45.0(2)	7.7(2)	4.3	18.7	3*
		575	3	17.8	20	20	36.0(2)	6.4(2)	3.4	16.2	3*

* OPTIONAL

ClimateMaster works continually to improve its products. As a result, the design and specifications of each product at the time of order may be changed without notice and may not be as described herein. Please contact ClimateMaster's Customer Service Department at 1-405-745-6000 for specific information on the current design and specifications. Statements and other information contained herein are not express warranties and do not form the basis of any bargain between the parties but are merely ClimateMaster's opinion or commendation of its products.

HS/HL/VS/VL Submittal Data

CLIMATEMASTER®

Contractor: _____ P.O.: _____

Engineer: _____

Project Name: _____ Unit Tag: _____

Typical Wiring Diagram

Typical Single Phase
Wiring Diagram for
HS/HL, VS/VL Units with
CXM Controller

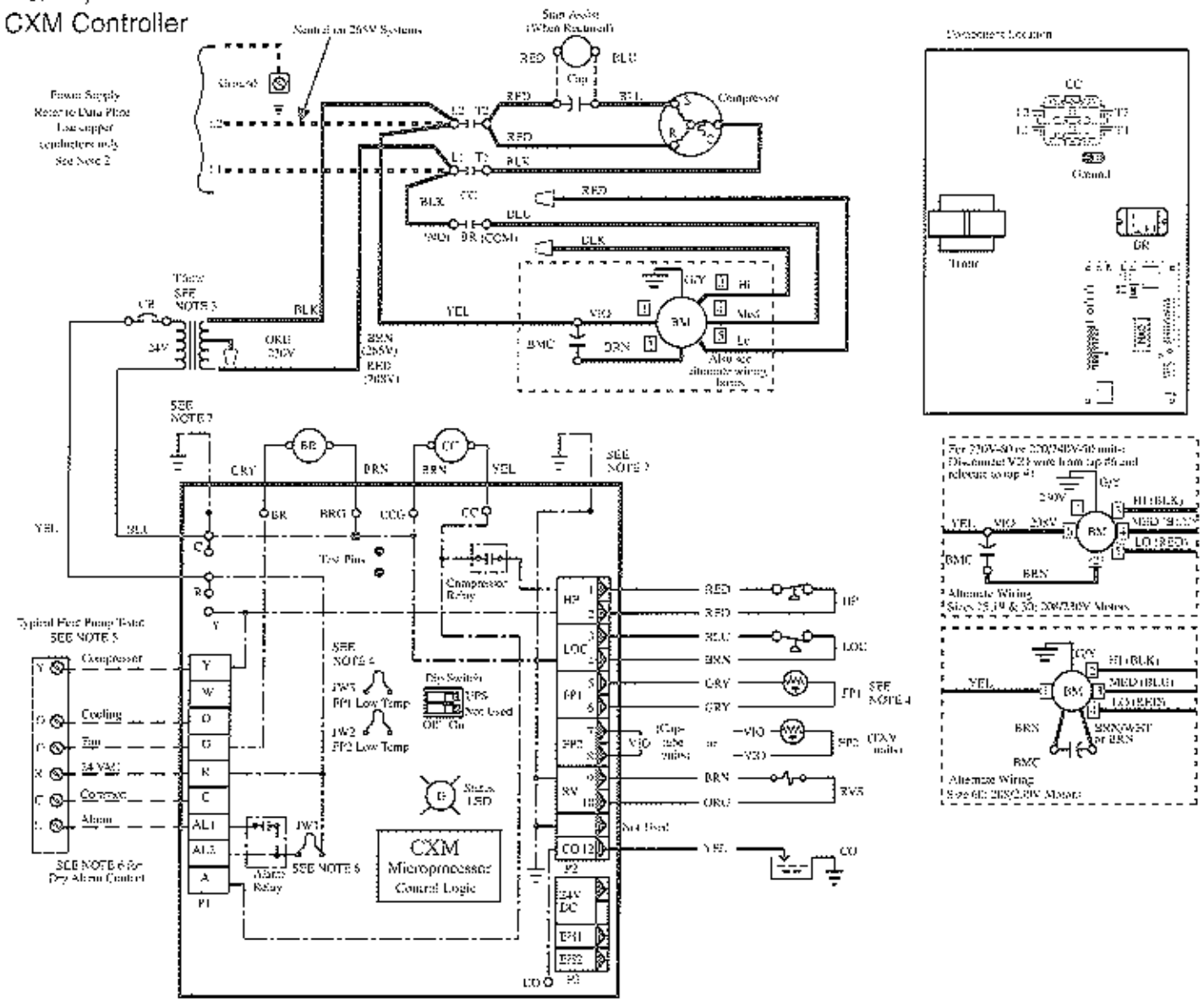

Legend

- Field line voltage wiring
- Field low voltage wiring
- Printed Circuit Trace
- Relay / Contactor Coil
- Condensate Pan
- Solenoid Coil
- Thermistor
- Ground
- Wire Net

AL	Alarm Relay Contacts
BM	Blower Motor
BMC	Blower Motor Capacitor
BR	Blower Relay
Cap	Compressor Capacitor
CB	Circuit Breaker
CC	Compressor Contactor
CO	Sensor Condensate Overflow
FP1	Sensor, Water Coil Freeze Protection
FP2	Sensor, Air Coil Freeze Protection
HP	High Pressure Switch
JW3	Jumper, Alarm
LOC	Loss of Charge Pressure Switch
P1	Field Wiring Terminal Block
RVS	Reversing Valve Solenoid
Tstat	Transformer

NOTES:

1. Compressor and Blower Motor thermally protected internally.
2. All wiring to the unit must comply with NEC and local codes.
3. Transformer is wired for 265V (BRN) Lead for 265/50/60 units, 230V (ORG) Lead for 230/220/50/60, or 208V (RED) Lead for 208/50/60. For 230/50/60 switch RED & ORG Leads at L1 and insulate RED Lead. Transformer is energy limiting or may have circuit breaker. Check alternate blower motor wiring boxes (25,19,&30:230 volt only).
4. FP1 Thermistor provides freeze protection for WATER. When using ANTI-FREEZE solutions, cut JW3 jumper.
5. Typical heat pump thermostat wiring shown. Refer to thermostat installation instructions for wiring to the unit. Field wiring must be "Class 1" and Voltage rating equal to or greater than unit supply voltage.
6. 24V Alarm Signal shown. For Dry Alarm Contact, cut JW3 Jumper and Dry Contact will be available between AL1 and AL2.
7. Transformer secondary ground via CXM board standoffs & screws to Control Box. (Ground available from terminal "A" as shown).

ClimateMaster works continually to improve its products. As a result, the design and specifications of each product at the time of order may be changed without notice and may not be as described herein. Please contact ClimateMaster's Customer Service Department at 1-405 745-6000 for specific information on the current design and specifications. Statements and other information may be interpretive and do not imply express warranties and do not form the basis of any bargain between the parties, but are merely ClimateMaster's opinion or commendation of its products.

HS/HL/VS/VL Submittal Data

Contractor: _____ P.O.: _____

Engineer: _____

Project Name: _____ Unit Tag: _____

Typical Wiring Diagram

Typical Three Phase Wiring Diagram for HS/HL, VS/VL Units with CXM Controller

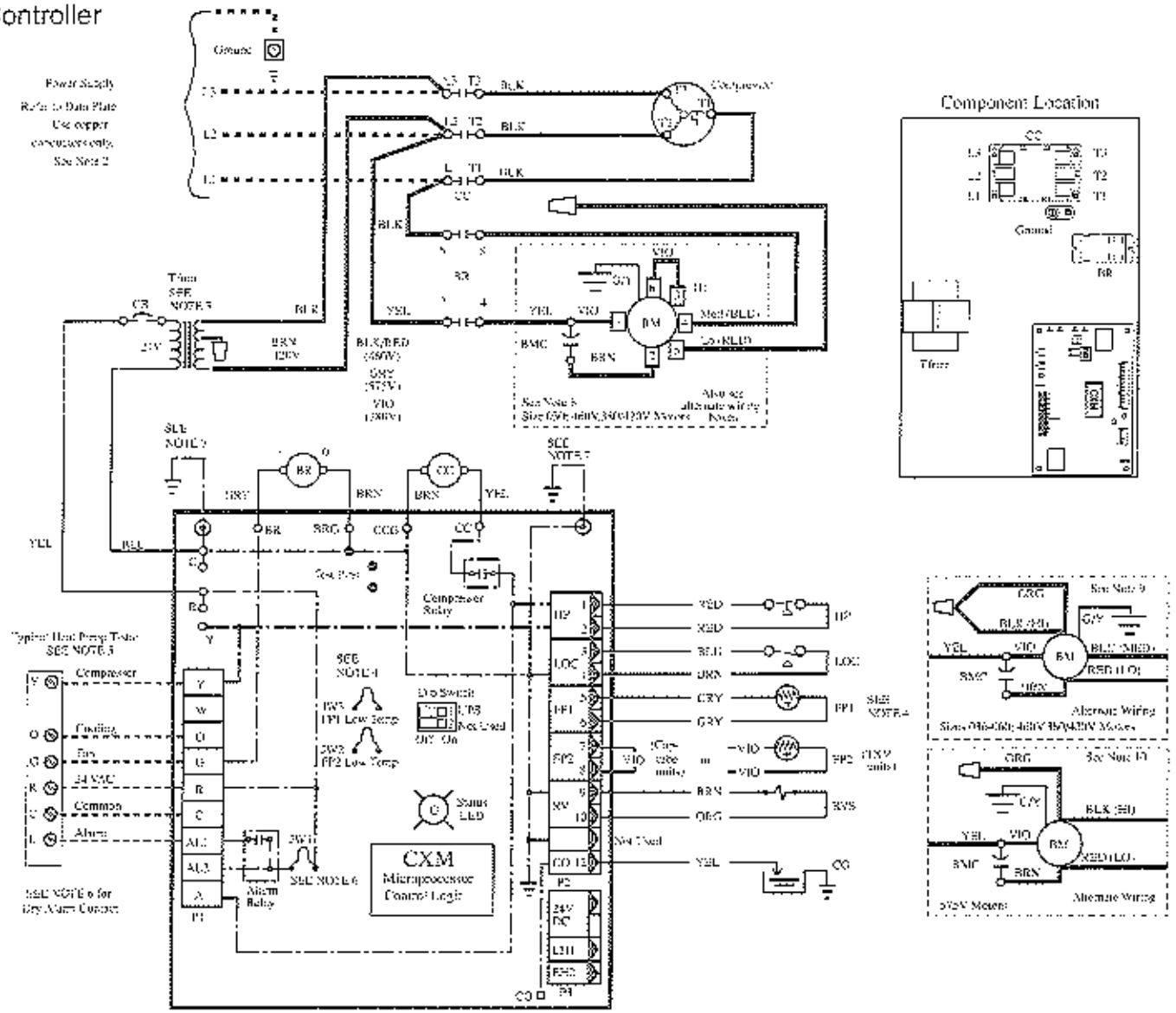

Legend

	Field line voltage wiring	AL	Alarm Relay Contacts	FP2	Sensor, Air Coil Freeze Protection
	Field low voltage wiring	BMC	Blower Motor Capacitor	HP	High Pressure Switch
	Printed Circuit Trace	BR	Blower Relay	JW1	Jumper, Alarm
	Relay / Contactor Coil	CB	Circuit Breaker	LOC	Loss of Charge Pressure Switch
	Condensate Pan	CC	Compressor Contactor	P1	Field Wiring Terminal Block
	Solenoid Coil	CO	Sensor, Condensate Overflow	RVS	Reversing Valve Solenoid
	Thermistor	FP1	Sensor, Water Coil Freeze Protection	Time	Transformer
	Ground				

NOTES:

1. Compressor and Blower Motor thermally protected internally.
2. All wiring to the unit must comply with NEC and local codes.
3. Timer is wired to 460V (BLK/RED) Lead for 460/480 units.
   575V (GRY) Lead for 575/600 or 380V (VIO) Lead for 380/400.
   For 400V/50 units VIO & BRN Transfer; L1 and leave VIO Lead.
   Transformer is energy limiting or may have circuit breaker.

NOTES: (cont.)

4. FP1: Thermistor provides freeze protection for WATER. When using ANTI-FREEZE solutions, cut JW1 jumper.
5. Typical heat pump thermostat wiring shown. Refer to thermostat installation instructions for wiring to the unit. Field wiring must be Class 1 and Voltage rating equal to or greater than unit supply voltage.
6. 24V Alarm Signal shown. For Dry Alarm Contact, cut JW1 jumper and Dry Contact will be available between AL1 and AL2.
7. Transformer secondary ground via CXM board standoffs & screws to Control Box. (Ground available from top two standoffs as shown.)
8. For HIGH speed operation, remove VIO wire between blower motor terminals 5 and 6. Relocate BLK wire from terminal 4 to 5.
   For LOW speed operation, disconnect RED wire from blower relay and cap (insulate). Connect the VIO wire to the blower relay.
9. For HIGH speed operation, separate BLK and ORG leads and cap (insulate) the ORG. Disconnect the BLK lead from the blower relay and cap. Connect the BLK lead to the blower relay.
   For LOW speed operation, disconnect BLK lead from blower relay and cap. Connect the RED lead to the blower relay.
10. This is a two speed motor. For LOW speed operation, disconnect the BLK lead from the blower relay and connect the RED lead. Connect the BLK and ORG leads together.

ClimateMaster works continually to improve its products. As a result, the design and specifications of each product at the time of order may be changed without notice and may not be as described herein. Please contact ClimateMaster's Customer Service Department at 1-405-745-6000 for specific information on the current design and specifications. Statements and other information contained herein are not express warranties and do not form the basis of any bargain between the parties, and are merely ClimateMaster's opinion or commendation of its products.

HS/HL Submittal Data

Contractor: _____ P.O.: _____

Engineer: _____

Project Name: _____ Unit Tag: _____

Typical Wiring Diagram

Typical Three Phase, Two Compressor Unit Wiring Diagram for HS/HL (Sizes 72, 96, 120) with CXM Controller

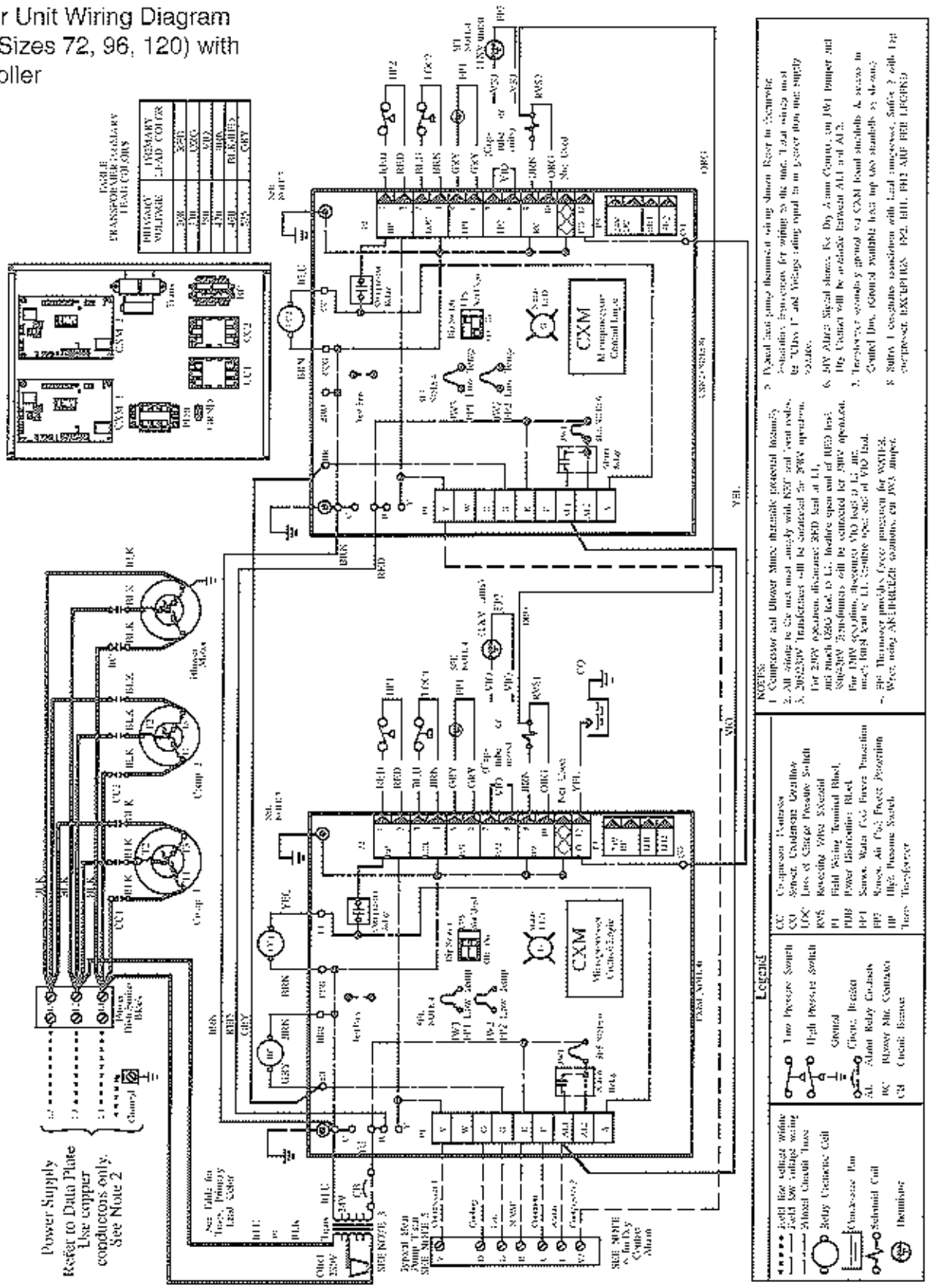

ClimateMaster works continually to improve its products. As a result, the design and specifications of each product at the time of order may be changed without notice and may not be as described herein. Please contact ClimateMaster's Customer Service Department at 1-405-745-6000 for specific information on the current design and specifications. Statements and other information contained herein are not express warranties and do not form the basis of any bargain between the parties, but are merely ClimateMaster's opinion or commendation of its products.

HS/HL Submittal Data

CLIMATEMASTER®

Contractor: _____ P.O.: _____

Engineer: _____

Project Name: _____ Unit Tag: _____

Typical Wiring Diagram

Typical Single Phase Wiring Diagram for HS/HL, VS/VL Units with DXM Controller

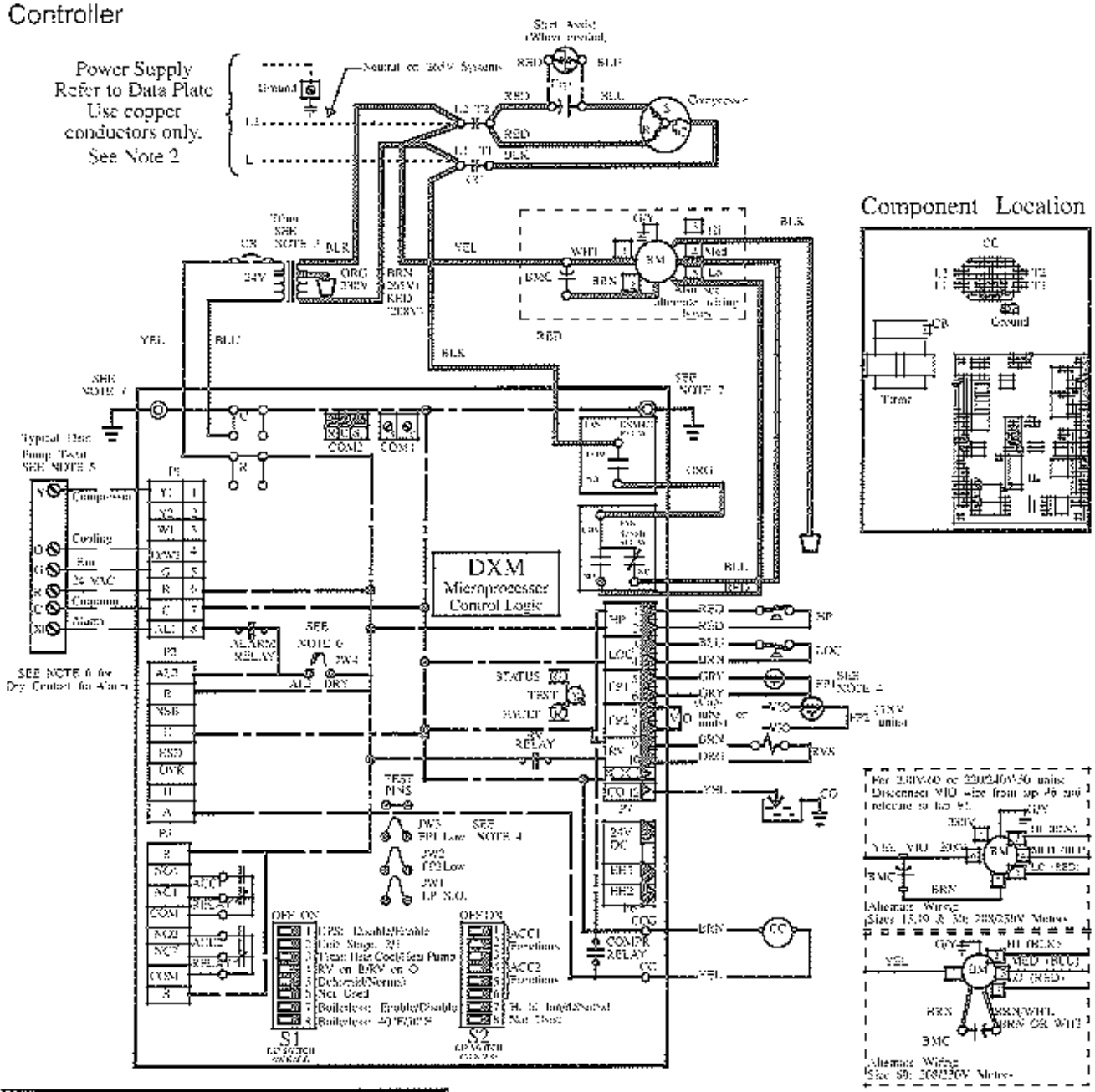

NOTES:

1. Compressor and Blower Motor thermally protected internally.
2. All wiring to the unit must comply with NEC and local codes.
3. Transformer is wired to 208V (BRN) Lead for 208/230 units. 230V (ORG) Lead for 220-240/1/50, or 208V (RED) Lead for 208/1/60. For 230/1/60 switch RED & ORG Leads at L1 and include RED Lead. Transformer is energy limiting or may have circuit breaker. Check alternate blower motor wiring box. Sizes 15,19 & 30: 230 volt only.
4. FP1 Thermistor provides freeze protection for WATER. When using ANTI-FREEZE solutions, cut JW3 jumper.
5. Typical heat pump thermostat wiring shown. Refer to thermostat installation instructions for wiring to the unit. Thermostat wiring must be "Class 1" and Voltage rating equal to or greater than unit supply voltage.
6. 24V Alarm Signal shown. For Dry Alarm Contact, cut AL2 DRY (JW4) Jumper and Dry Contact will be available between AL1 and AL2.
7. Transformer secondary ground via DXM board standoffs & screws to Control Box. (Ground available from tap two standoffs at shown.)

Legend

Field line voltage wiring	AL Alarm Relay Contacts	FP1 Screw Water Coil Freeze Protection
Field low voltage wiring	BM Blower Motor	FP2 Screw Air Coil Freeze Protection
Factory Chassis Ground	BMC Blower Motor Capacitor	HP High Pressure Switch
Relay / Contactor Coil	BR Blower Relay	JW1 Jumper Wire for Alarm
Condensate Pan	Cap Compressor Capacitor	LOC Loss of Charge Pressure Switch
Solenoid Coil	CB Circuit Breaker	PL Field Wiring Terminal Block
Thermistor	CC Compressor Contactor	RVS Reversing Valve Solenoid
Ground	CCH Crankcase Heater	Trans Transformer
Wire Nut	CO Secondary Condensate Overflow	

ClimateMaster works continually to improve its products. As a result, the design and specifications of each product at the time of order may be changed without notice and may not be as described herein. Please contact ClimateMaster's Customer Service Department at 1-405-745-6000 for specific information on the current design and specifications. Statements and other information contained herein are not express warranties and do not form the basis of any bargain between the parties, but are merely ClimateMaster's opinion or representation of its products.

HS/HL Submittal Data

CLIMATEMASTER®

Contractor: _____ P.O.: _____

Engineer: _____

Project Name: _____ Unit Tag: _____

Typical Wiring Diagram

Typical Three Phase Wiring Diagram for HS/HL with DXM Controller

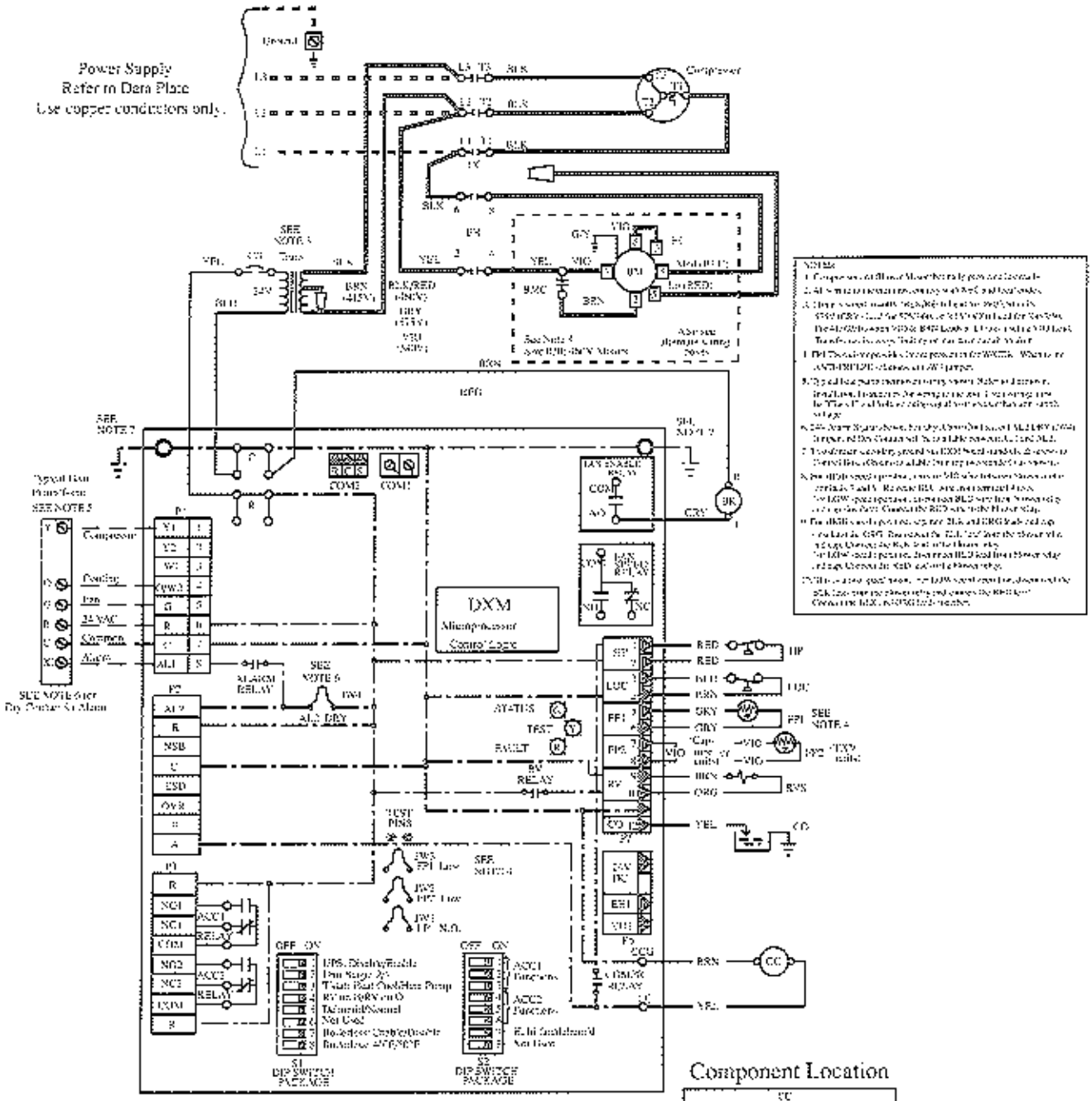

NOTES

1. Compressor and Blower Motors are fully protected.
2. All wiring must conform to applicable local and national codes.
3. Unit supplied with high/low pressure switches. Water coil units require low water temperature protection. Air coil units require low air temperature protection. Water coil units require water flow protection.
4. Pin 10 is reserved for Condensate Overflow Sensor. Water coil units require water flow protection. Air coil units require air flow protection.
5. Typical fan power wiring shown. Refer to Installation Instructions for specific fan power requirements.
6. 24V Alarm Signal shown for Dry Contact Closure (ALT DRY) only. Jumper pin 10 to Ground for Solid State Alarm (ALT).
7. Transformer secondary grounded on 208V and 230V units. Grounded on primary on all other units.
8. For HS/HL units, connect 24V alarm between terminals 5 and 9. Remove JW1 and install JW2. For HGW units, connect BLU wire from Alarm relay to pin 5 on the DXM board. Connect BRN wire to pin 9 on the board.
9. For HS/HL units, connect wires for 208 and 230 Volt units to 230 Volt. GRY wire must be field connected to the 230 Volt tap of the transformer. Connect the RED wire to the 208 Volt tap. Connect the BLU wire to the 24 Volt tap. For HGW units, connect the BLU wire to the 24 Volt tap. Connect the GRY wire to the 208 Volt tap.
10. For HS/HL units, connect the DXM signal input to the appropriate thermistor. Connect the BRN wire to the Air Coil Thermistor. Connect the BLU wire to the Water Coil Thermistor.

ClimateMaster works continually to improve its products. As a result, the design and specifications of each product at the time of order may be changed without notice and may not be as described herein. Please contact ClimateMaster's Customer Service Department at 1-405-745-6000 for specific information on the current design and specifications. Statements and other information contained herein are not express warranties and do not form the basis of any bargain between the parties, but are merely ClimateMaster's opinion or commendation of its products.

HS/HL/VS/VL Submittal Data

Contractor: _____ P.O.: _____

Engineer: _____

Project Name: _____ Unit Tag: _____

Typical Wiring Diagram

Typical Three Phase, Two Compressor Unit Wiring Diagram for HS/HL (Sizes 72, 96, 120) with DXM Controller

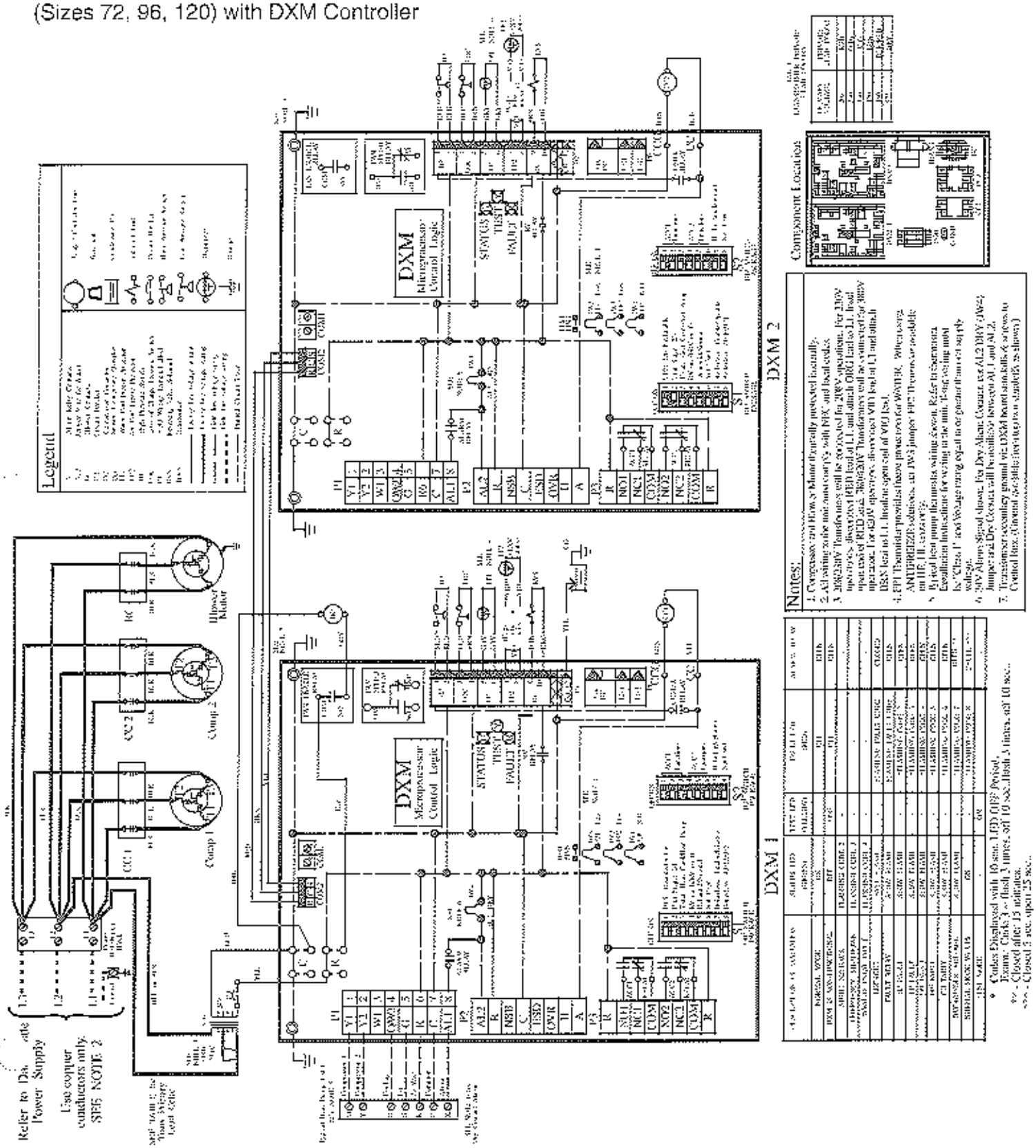

ClimateMaster works continually to improve its products. As a result, the design and specifications of each product at the time of order may be changed without notice and may not be as described herein. Please contact ClimateMaster's Customer Service Department at 1-405-745-6000 for specific information on the current design and specifications. Statements and other information contained herein are not express warranties and do not form the basis of any bargain between the parties, but are merely ClimateMaster's opinion or commendation of its products.

HS/HL/VS/VL Submittal Data

Contractor: _____ P.O.: _____

Engineer: _____

Project Name: _____ Unit Tag: _____

Typical Wiring Diagram

DXM Series Electronic Control
Typical Night Setback / Emergency Shutdown / Pump Restart

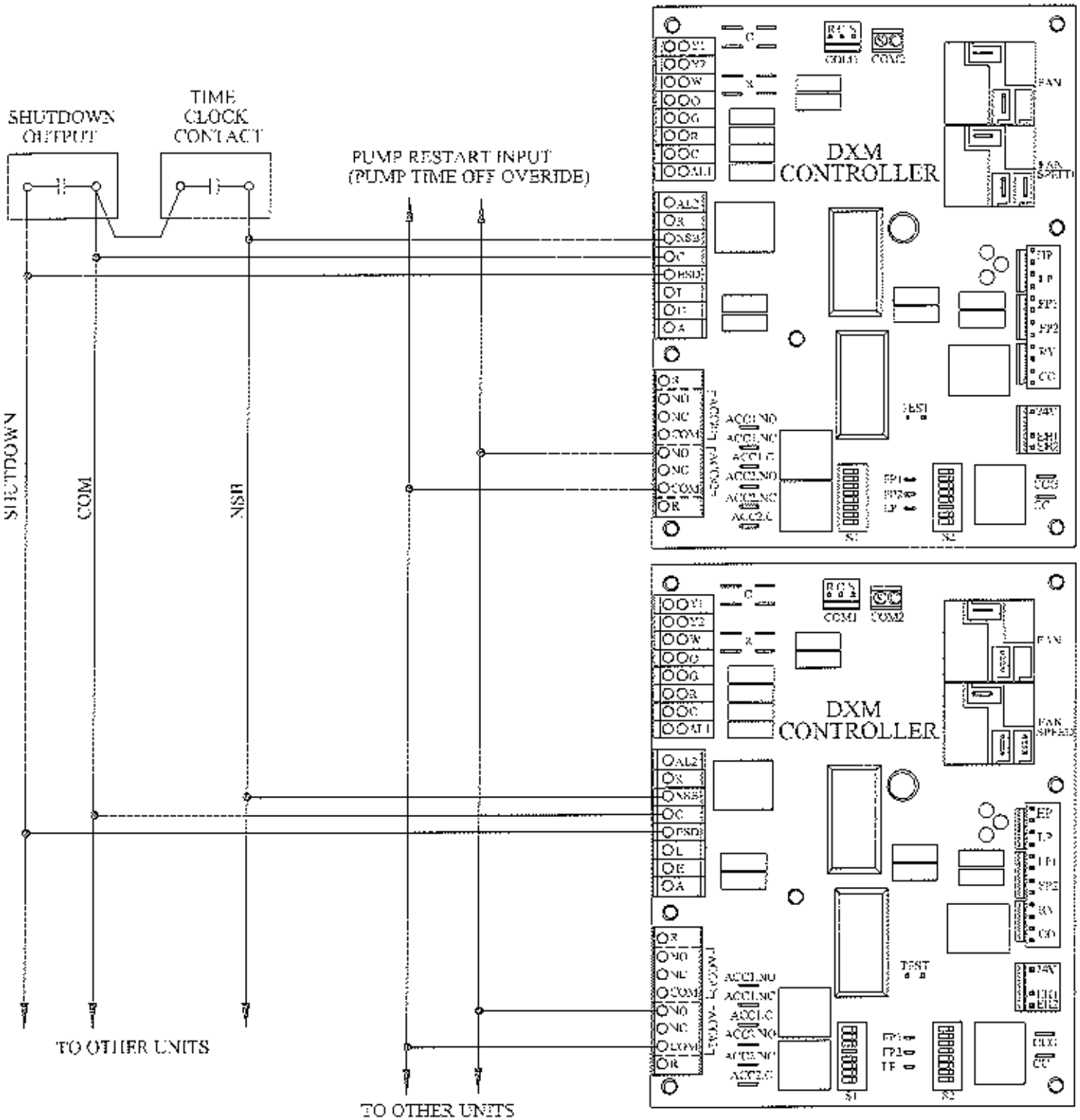

HS/HL/VS/VL Submittal Data

CLIMATEMASTER®

Physical Characteristics

Contractor: _____ *P.O.:* _____

Engineer: _____

Project Name: _____ *Unit Tag:* _____

Size	Model	Ship Wt. Lb.	Oper. Wt. Lb.	Face Area Sq. Ft.	Refr.-to-Air Heat Exchanger No. of Rows Deep	Copper Tube Size OD in.	No. of Fins/ Inch	Refrig. Charge R-22/CKT oz.	No. of Circuits	High Volt. Knockout In.	Blower Diameter	Blower Width
006	HS/HL	116	108	0.97	2	3/8	12	12	1	7/8, 1-1/8	5.5	5.0
009	HS/VS	116	108	0.97	2	3/8	12	16	1	7/8, 1-1/8	5.5	5.0
	HL/VL	118	108	0.97	2	3/8	12	17	1	7/8, 1-1/8	5.5	5.0
012	HS/VS	123	117	0.97	2	3/8	12	16	1	7/8, 1-1/8	6.0	5.0
	HL/VL	123	117	0.97	2	3/8	12	17	1	7/8, 1-1/8	6.0	5.0
015	HS/VS	160	150	2.22	3	3/8	12	25	1	7/8, 1-1/8	6.0	5.0
	HL/VL	160	150	2.22	3	3/8	12	25	1	7/8, 1-1/8	6.0	5.0
019	HS/VS	180	175	2.22	3	3/8	12	28	1	7/8, 1-1/8	9.0	7.0
	HL/VL	180	175	2.22	3	3/8	12	28	1	7/8, 1-1/8	9.0	7.0
024	HS/VS	230	200	2.50	3	3/8	13	32	1	7/8, 1-1/8	9.0	7.0
	HL/VL	235	215	2.50	3	3/8	13	34	1	7/8, 1-1/8	9.0	7.0
030	HS/VS	220	200	2.50	3	3/8	13	38	1	7/8, 1-1/8	9.0	7.0
	HL/VL	235	215	2.50	3	3/8	13	39	1	7/8, 1-1/8	9.0	7.0
036	HS/VS	235	225	3.33	2	3/8	14	35	1	7/8, 1-1/8	9.0	7.0
	HL/VL	235	225	3.33	2	3/8	14	36	1	7/8, 1-1/8	9.0	7.0
042	HS/VS	240	230	3.33	3	3/8	12	50	1	7/8, 1-1/8	9.0	8.0
	HL/VL	240	230	3.33	3	3/8	12	54	1	7/8, 1-1/8	9.0	8.0
048	HS/VS	300	290	4.17	2	3/8	14	46	1	7/8, 1-1/8	10.0	10.0
	HL/VL	300	290	4.17	3	3/8	14	42	1	7/8, 1-1/8	10.0	10.0
060	HS/VS	357	347	4.17	3	3/8	14	82	1	7/8, 1-1/8	11.0	10.0
	HL/VL	357	347	4.17	3	3/8	14	82	1	7/8, 1-1/8	11.0	10.0
072	HS	635	615	6.66	2	3/8	14	38	2	1 3/8	12.0	11.0
	HL	635	615	6.66	2	3/8	14	36	2	1 3/8	12.0	11.0
096	HS	665	645	8.33	2	3/8	14	46	2	1 3/8	10.0(2)	10.0(2)
	HL	665	645	8.33	2	3/8	14	42	2	1 3/8	10.0(2)	10.0(2)
120	HS	675	655	8.33	3	3/8	14	82	2	1 3/8	11.0(2)	10.0(2)
	HL	675	655	8.33	3	3/8	14	82	2	1 3/8	11.0(2)	10.0(2)

Operating Limits

Environment
This equipment is designed for indoor installation ONLY.

Power Supply
A voltage variation of +/- 10% of nameplate utilization voltage is acceptable. Three-phase system imbalance shall not exceed 2%.

Starting Conditions
HS/VS Units:
HS/VS Units start and operate in heating in an ambient of 40°F, with entering air at 50°F, with entering water at 70°F, with both air and water at the flow rates used in the ARI Standard 320-86 rating test, for initial start-up in winter.

Note: These are not normal or continuous operating conditions. It is assumed that such a start-up is for the purpose of bringing the building space up to occupancy temperature.

HL/VL Units:
HL/VL Unit Heat Pumps will start and operate in an ambient of 40°F, with entering air at 40°F, with entering water at 40°F, with both air and water at the flow rates used in the ARI Standard 320-86 rating test, for initial start-up in winter.

Note: These are not normal or continuous operating conditions. It is assumed that such a start-up is for the purpose of bringing the building space up to occupancy temperature.

Air and Water Limits

	HS/VS		HL/VL	
	Cooling	Heating	Cooling	Heating
Min. Ambient Air	50°F	50°F	40°F	40°F
Rated Ambient Air	80°F	70°F	80°F	70°F
Max. Ambient Air	100°F	85°F	100°F	85°F
Min. Entering Air, db/wb	70/61°F	50°F	70/61°F	40°F
Rated Entering Air, db/wb	80/67°F	70°F	80/67°F	70°F
Max. Entering Air, db/wb	95/76°F	80°F	95/76°F	80°F

Water Limits

	HS/VS		HL/VL	
	Cooling	Heating	Cooling	Heating
Min. Entering Water	60°F	60°F	40°F	40°F
Normal Entering Water	85°F	70°F	85°F	70°F
Max. Entering Water	95°F	90°F	110°F	90°F

NOTES: (A) Minimum Air and Water conditions can only be used at ARI flow rates.
(B) Only one maximum or minimum value may be used with HS/VS Units, all other parameters must be at normal conditions. HL/VL Units may have up to two values at maximum or minimum with all other parameters at normal condition.

ClimateMaster works continually to improve its products. As a result, the design and specifications of each product at the time of order may be changed without notice and may not be as described herein. Please contact ClimateMaster's Customer Service Department at 1-405-745-6000 for specific information on the current design and specifications. Statements and other information contained herein are not express warranties and do not form the basis of any bargain between the parties, but are merely ClimateMaster's opinion or commendation of its products.

HS/HL Submittal Data

CLIMATEMASTER®

Contractor: _____ P.O.: _____

Engineer: _____

Project Name: _____ Unit Tag: _____

Dimensions
HS/HL 006/009/012

Optional Air Flow Arrangements Plan View

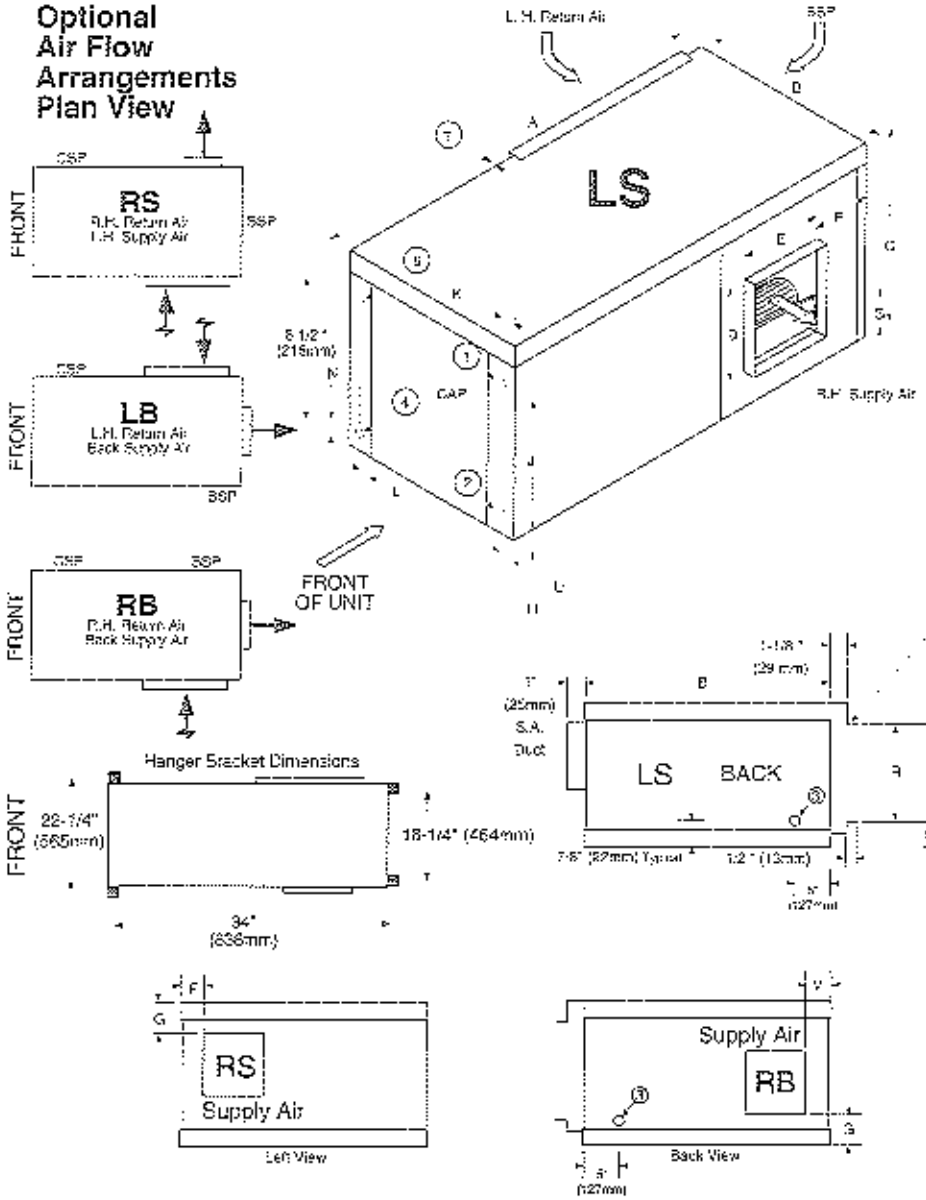

1. Water Outlet 1/2" FPT
2. Water Inlet 1/2" FPT
3. Condensate Drain 3/4" FPT
4. High Voltage Access 7/8" X 1-1/8" K.O. (22mm X 29mm)
5. Low Voltage Access 1/2" DIA* (13mm)

CAP - Control Access Panel
BSP - Blower Service Panel
CSP - Compressor Service Panel

Nominal Filter Size
10" x 16" x 1"
(245mm x 406mm x 25mm)

Return Air Duct Size
8-1/4" High x 14" Wide
(210mm High x 356mm wide)

*OPTIONAL ELECTRICAL ACCESS ON LEFT SIDE OF CORNER POST.

Supply Air Duct locations (LS shown on main drawing)

NOTE: Air flow pattern can be converted in the field by interchanging the blower discharge panel (w/blower assembly attached) with the blower service panel. Only LS to LB and RS to RB can be converted.

MODEL		A	B	C	D	E	F	G	H	J	K	L	M	N	O	P	R	S	T	U	V
006	INCHES	34	20	11-1/8	5-3/4	8	7	4	2-3/8	6-1/8	1	1	1	1-11/16	2	15	9	1/2	1-1/8	1	4-1/2
	MM	854	508	283	146	203	178	120	60	156	25	25	25	43	51	381	229	13	31	25	114
009	INCHES	34	20	11-1/8	5-3/4	8	7	4	2-3/8	6-1/8	1	1	1	1-11/16	2	15	9	1/2	1-1/8	1	4-1/2
	MM	854	508	283	146	203	178	120	60	156	25	25	25	43	51	381	229	13	31	25	114
012	INCHES	34	20	11-1/8	5-3/4	8	7	4	2-3/8	6-1/8	1	1	1	1-11/16	2	15	9	1/2	1-1/8	1	4-1/2
	MM	854	508	283	146	203	178	120	60	156	25	25	25	43	51	381	229	13	31	25	114

ClimateMaster works continually to improve its products. As a result, the design and specifications of each product at the time of order may be changed without notice and may not be as described herein. Please contact ClimateMaster's Customer Service Department at 1-405-745-6000 to verify information on the current design and specifications. Statements and other information contained herein are not express warranties and do not form the basis of any bargain between the parties, but are merely ClimateMaster's opinion or commendation of its products.

HS/HL Submittal Data

CLIMATEMASTER®

Contractor: _____ P.O.: _____

Engineer: _____

Project Name: _____ Unit Tag: _____

Dimensions
HS/HL 015/019/024/030

Optional Air Flow Arrangements Plan View

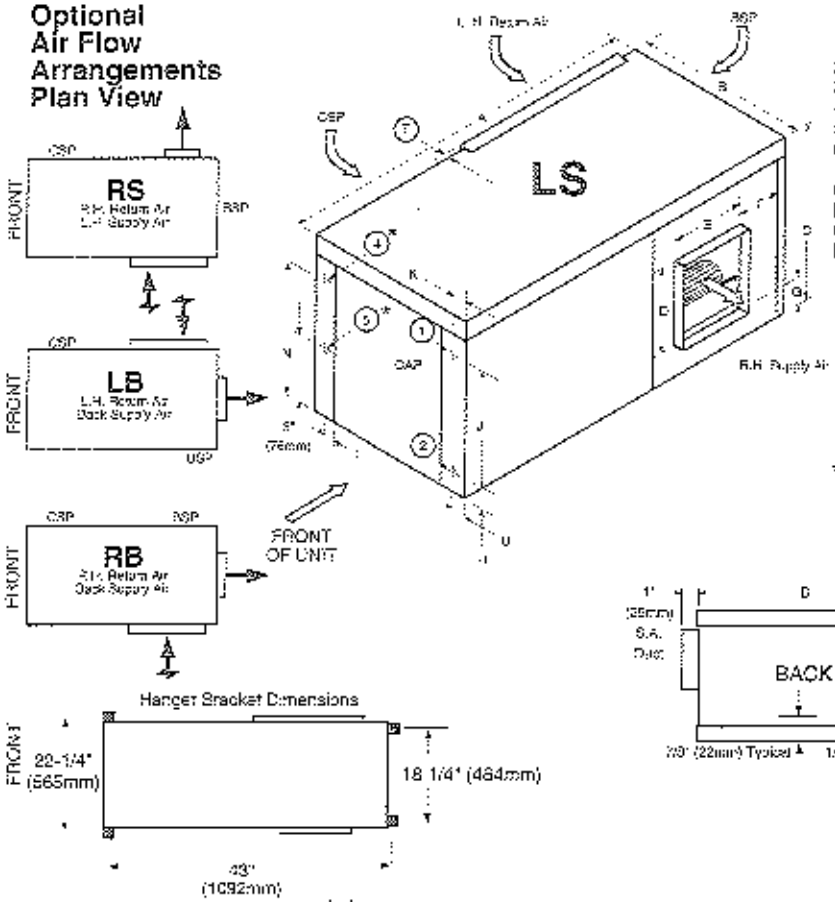

	Size 015-019	Size 024-030
1. Water Outlet	1/2" FPT	3/4" FPT
2. Water Inlet	1/2" FPT	3/4" FPT
3. Condensate Drain	3/4" FPT	3/4" FPT
4. High Voltage Access	7/8" X 1-1/8" K.O.* (22mm X 29mm)	
5. Low Voltage Access	1/2" DIA* (13mm)	

6. HWG Outlet Sz 024 - 10 3/8" (263mm) from bottom of unit
   HWG Inlet Sz 024 - 3 5/8" (92mm) from bottom of unit

CAP - Control Access Panel
BSP - Blower Service Panel
CSP - Compressor Service Panel

Nominal Filter Size: Unit Size 015-019
16" x 22" x 1"
(406mm x 559mm x 25mm)
Unit Size 024-030
18" x 22" x 1"
(457mm x 559mm x 25mm)

*OPTIONAL ELECTRICAL ACCESS ON LEFT SIDE OF CORNER POST.

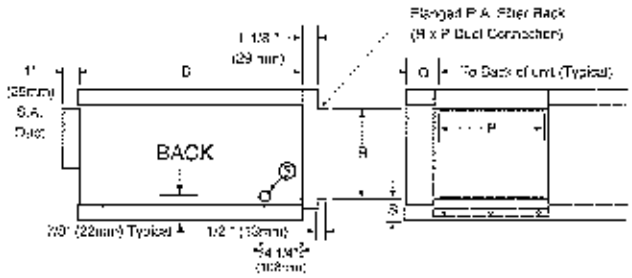

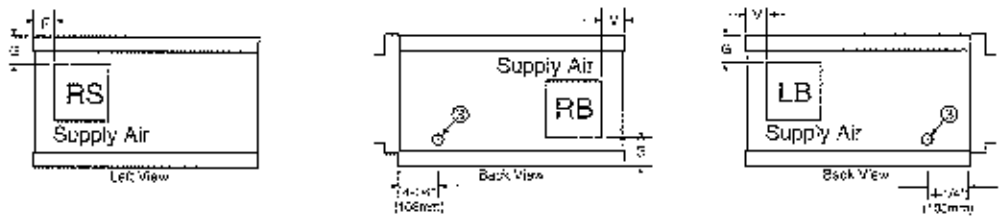

Supply Air Duct locations (LS shown on main drawing)

NOTE: Air flow pattern can be converted in the field by interchanging the blower discharge panel (w/blower assembly attached) with the blower service panel. Only LS to LB and RS to RB can be converted.

MODEL		A	B	C	D	E	F	G	H	J	K	L	M	N	O	P	R	S	T	U	V
015	INCHES	43	20	17	7-3/4	10	6-3/4	5-1/4	1-1/4	12	2-3/8	1	4-1/4	14-1/2	2	20-1/2	15-1/8	1/2	1-1/8	4	5
	MM	1092	508	432	197	254	171	133	32	305	60	25	108	369	51	521	375	13	29	102	127
019	INCHES	43	20	17	10-1/4	7	6-1/2	5-1/4	1-1/4	11	2-3/8	1	1-1/4	14-1/2	2	20-1/2	15-1/8	1/2	1-1/8	4	6-1/2
	MM	1092	508	432	260	178	165	133	32	279	60	25	32	369	51	521	375	13	29	102	165
024	INCHES	43	20	19	10	9	5-1/4	5-1/4	1-1/4	11	2-3/8	1	4	14-1/2	2	20-1/2	17-1/8	1/2	1-1/8	4	5-1/4
	MM	1092	508	483	254	229	133	133	32	297	60	25	102	369	51	521	425	13	29	102	133
030	INCHES	43	20	19	10	9	5-1/4	5-1/4	1-1/4	13-1/4	2-3/8	1	4	14-1/2	2	20-1/2	17-1/8	1/2	1-1/8	4	5-1/4
	MM	1092	508	483	254	229	133	133	32	337	60	25	102	369	51	521	425	13	29	102	133

ClimateMaster works continually to improve its products. As a result, the design and specifications of each product at the time of order may be changed without notice and may not be as described herein. Please contact ClimateMaster's Customer Service Department at 1-405-745-6000 for specific information on the current design and specifications. Statements and other information contained herein are not express warranties and do not form the basis of any bargain between the parties, but are merely ClimateMaster's opinion or commendation of its products.

HS/HL Submittal Data

Contractor: _____ P.O.: _____

Engineer: _____

Project Name: _____ Unit Tag: _____

Dimensions
HS/HL 036/042

Optional Air Flow Arrangements Plan View

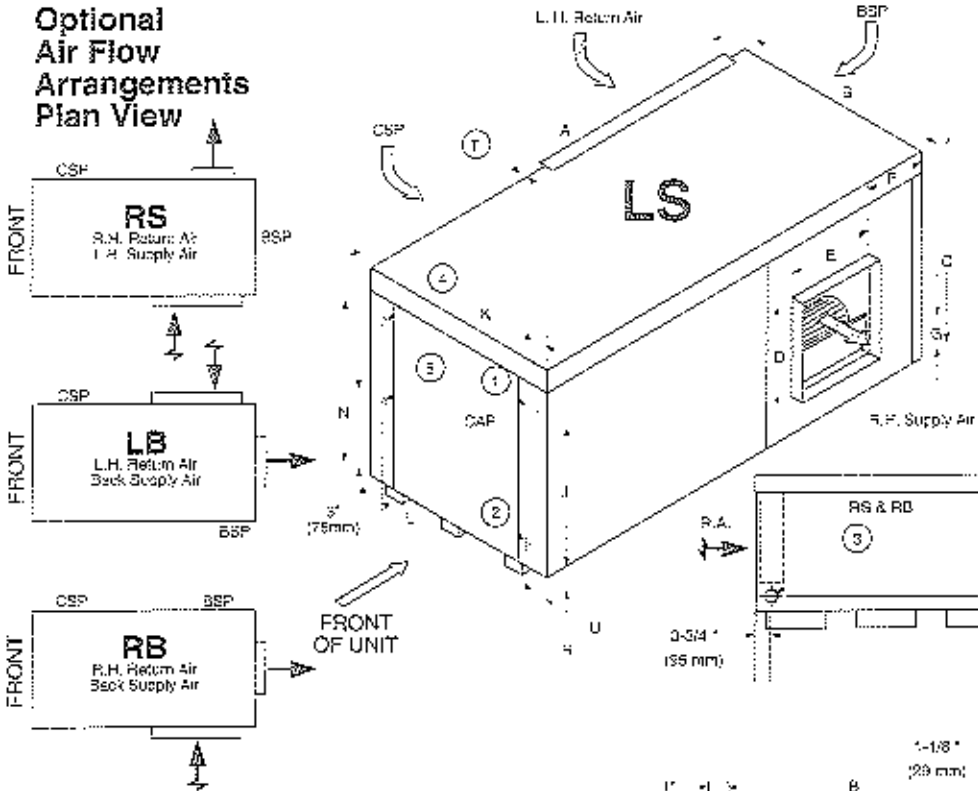

1. Water Outlet 3/4" FPT
2. Water Inlet 3/4" FPT
3. Condensate Drain 3/4" FPT
4. High Voltage Access 7/8" X 1-1/8" K.O. (22mm X 29mm)

5. Low Voltage Access 1/2" (13mm) K.O.

CAP - Control Access Panel
BSP - Blower Service Panel
CSP - Compressor Service Panel

Nominal Filter Size
20" x 25" x 1"
(508mm x 635mm x 25mm)

Return Air Duct Size
18-1/2" High x 23-3/4" Wide
(470mm High x 603mm Wide)

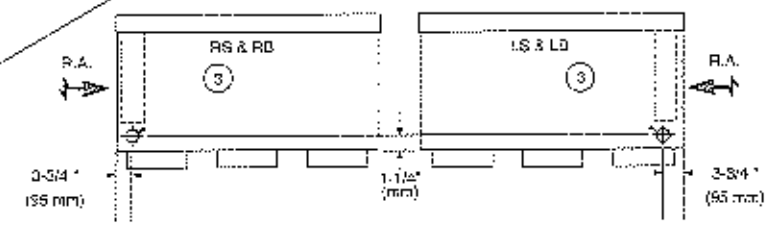

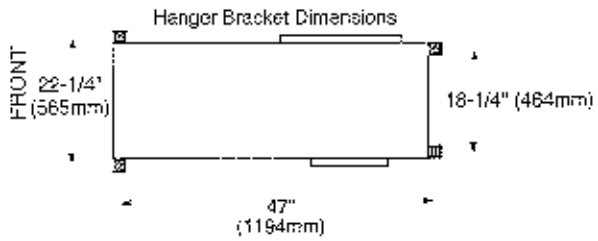

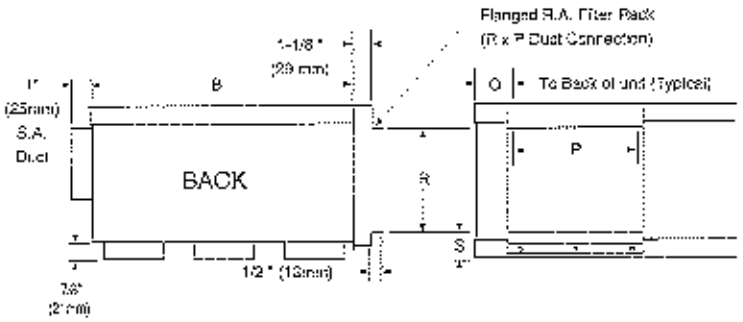

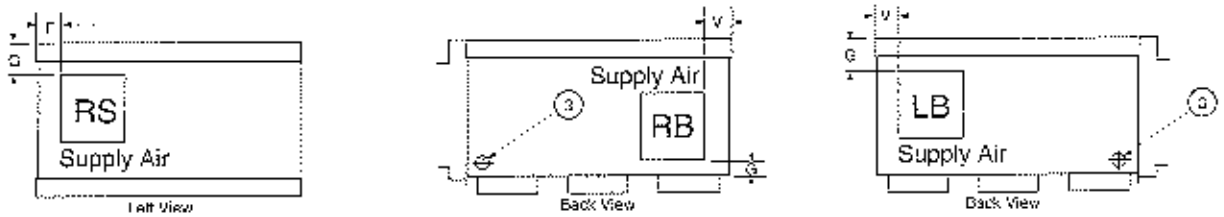

Supply Air Duct locations (LS shown on main drawing)

NOTE: Air flow pattern can be converted in the field by interchanging the blower discharge panel (w/blower assembly attached) with the blower service panel. Only LS to LB and RS to RB can be converted.

MODEL		A	B	C	D	E	F	G	H	J	K	L	N	O	P	R	S	T	U	V
036	INCHES	47	20	21	10-3/8	9-3/8	3-1/2	7-1/2	3-7/8	13-3/8	2-1/4	1	34-1/2	2-3/4	22-3/4	18-3/8	1-3/4	1-1/8	3-3/4	3-1/4
	MM	1194	508	533	264	238	191	191	98	340	57	25	369	70	578	467	44	31	95	83
042	INCHES	47	20	21	10-3/8	10-3/4	3-1/2	7-1/2	3-5/8	13-3/8	2-1/4	1	34-1/2	2-3/4	22-3/4	18-3/8	1-3/4	1-1/8	3-3/4	2-3/4
	MM	1194	508	533	264	273	152	191	92	340	57	25	369	70	578	467	44	31	95	67

ClimateMaster makes continually to improve its products. As a result, the design and specifications of each product at the time of order may be changed without notice and may not be as described herein. Please consult ClimateMaster's Customer Service Department at 1-405-745-6000 for specific information on the current design and specifications. Statements and other information contained herein are not express warranties and do not form the basis of any bargain between the parties, but are merely ClimateMaster's opinion or commendation of its products.

HS/HL Submittal Data

CLIMATEMASTER®

Contractor: _____ P.O.: _____

Engineer: _____

Project Name: _____ Unit Tag: _____

Dimensions
HS/HL 048/060

Hanger Bracket Dimensions

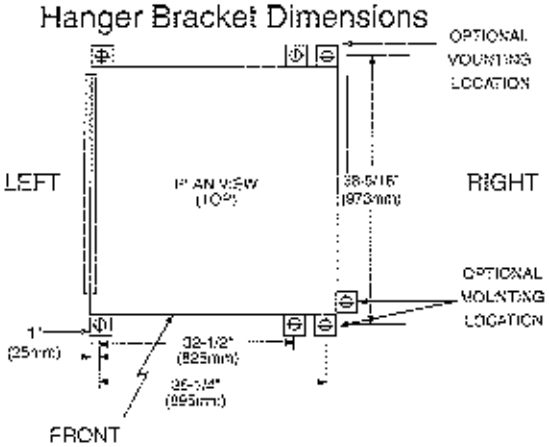

1. Water Outlet 1" FPT
2. Water Inlet 1" FPT
3. Condensate Drain 3/4" FPT
4. High Voltage Access 7/8" x 1 1/8" DIA., (22mm x 29mm DIA.)
5. Low Voltage Access 1/2" DIA., (13mm DIA.)

CAP - Control Access Panel
BSP - Blower Service Panel
CSP - Compressor Service Panel

Return Air Duct Size
18 1/4" High x 30" Wide
(464mm High x 762 Wide)
Nominal Filter Size
16" x 20" x 1" Two Required
(406mm High x 762mm Wide) Two Required

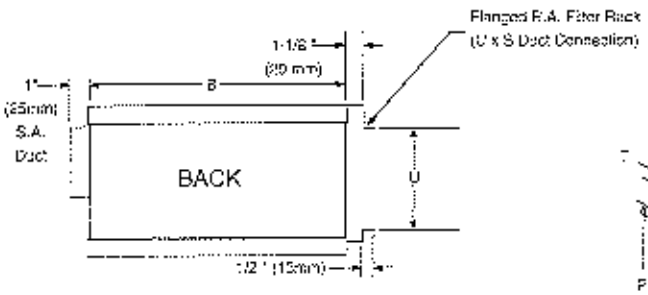

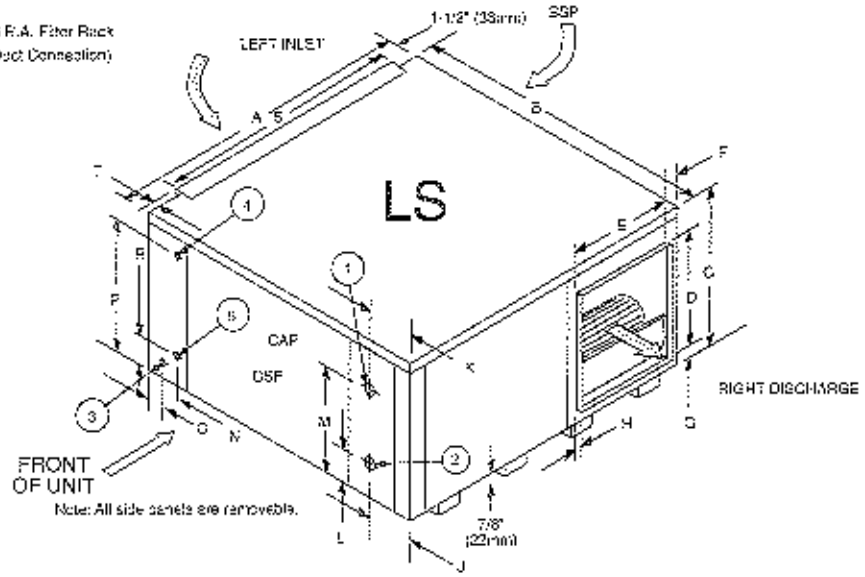

NOTE: Available in left return and straight blow only (LS) as shown.

MODEL		A	B	C	D	E	F	G	H	J	K	L	M	N	O	P	R	S	T	U	V
048	INCHES	36-1/4	36-1/4	21	15	15	1-3/4	2-5/8	1	5-1/8	1-7/8	2-5/8	18-1/2	7-1/2	5-3/8	12-1/2	4	32	1	18-1/4	1-1/2
	MM	921	921	533	381	381	44	67	25	130	48	67	470	191	137	318	102	813	25	464	38
060	INCHES	36-1/4	36-1/4	21	15	15	1-3/4	2-5/8	1	5-1/8	1-7/8	2-5/8	18-1/2	7-1/2	5-3/8	12-1/2	4	32	1	18-1/4	1-1/2
	MM	921	921	533	381	381	44	67	25	130	48	67	470	191	137	318	102	813	25	464	38

ClimateMaster works continually to improve its products. As a result, the design and specifications of each product at the time of order may be changed without notice and may not be as described herein. Please contact ClimateMaster's Customer Service Department at 1-405-745-6000 for specific information on the current design and specifications. Statements and other information contained herein are not express warranties and do not form the basis of any bargain between the parties, but are merely ClimateMaster's opinion or commendation of its products.

HS/HL Submittal Data

Contractor: _____ P.O.: _____

Engineer: _____

Project Name: _____ Unit Tag: _____

Dimensions
HS/HL 072

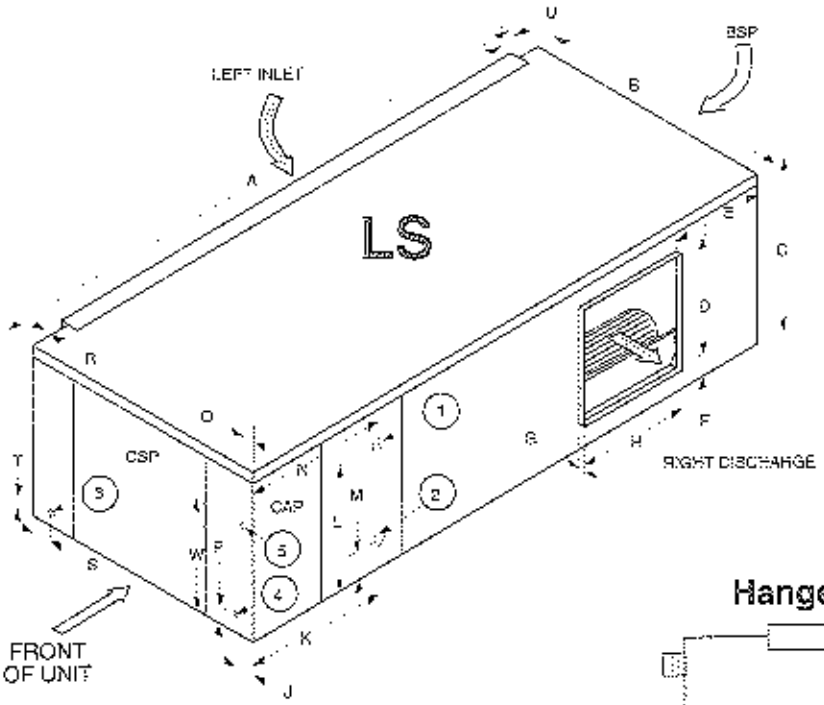

Note: All side panel's are removable.

1. Water Outlet — 1-1/4" FPT
2. Water Inlet — 1-1/4" FPT
3. Condensate Drain — 3/4" FPT
4. High Voltage Access — 1-3/8" K.O. (35mm)
5. Low Voltage Access — 1/2" DIA (13mm)

CAP - Control Access Panel
BSP - Blower Service Panel
CSP - Compressor Service Panel

Return Air Duct Size
18-1/4" High x 51-1/4" Wide
(464mm High x 1314mm Wide)

Nominal Filter Size
20" x 26-1/2" x 1" Two Required
(508mm x 673mm x 25mm) Two Required

FLANGED FILTER RACK VIEW AT INLET

Note: Leave one end of duct collar open for filter removal.

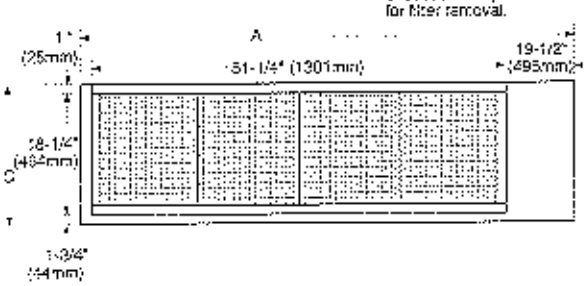

Hanger Bracket Dimensions

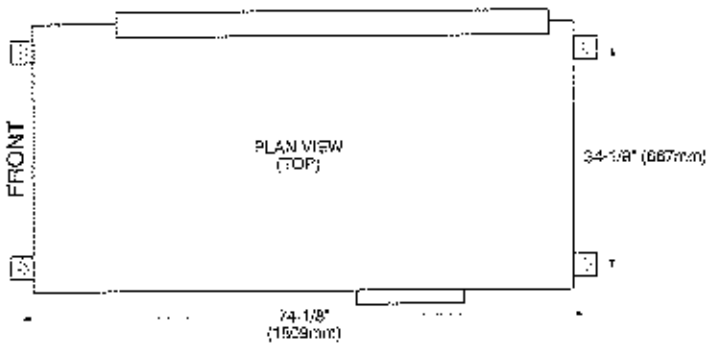

NOTE: Available in left return and straight blow only (LS) as shown.

MODEL		A	B	C	D	E	F	G	H	J	K	L	M	N	O	P	R	S	T	U	V
072	INCHES	72-1/4	36	21	16	14-1/2	3	1	16	1-7/8	19-3/4	16-1/2	3-1/4	21-1/4	1/2	2-1/2	1	4-1/4	1-3/8	3/4	13-1/2
	MM	1835	914	533	406	368	76	25	406	48	502	419	83	540	13	64	25	108	35	19	343

ClimateMaster works continually to improve its products. As a result, the design and specifications of each product at the time of order may be changed without notice and may not be as described herein. Please contact ClimateMaster's Customer Service Department at 1-405-745-6000 for specific information on the current design and specifications. Statements and other information contained herein are not express warranties and do not form the basis of any bargain between the parties, but are merely ClimateMaster's opinion or commendation of its products.

HS/HL Submittal Data

CLIMATEMASTER®

Contractor: _____ P.O.: _____

Engineer: _____

Project Name: _____ Unit Tag: _____

Dimensions
HS/HL 096/120

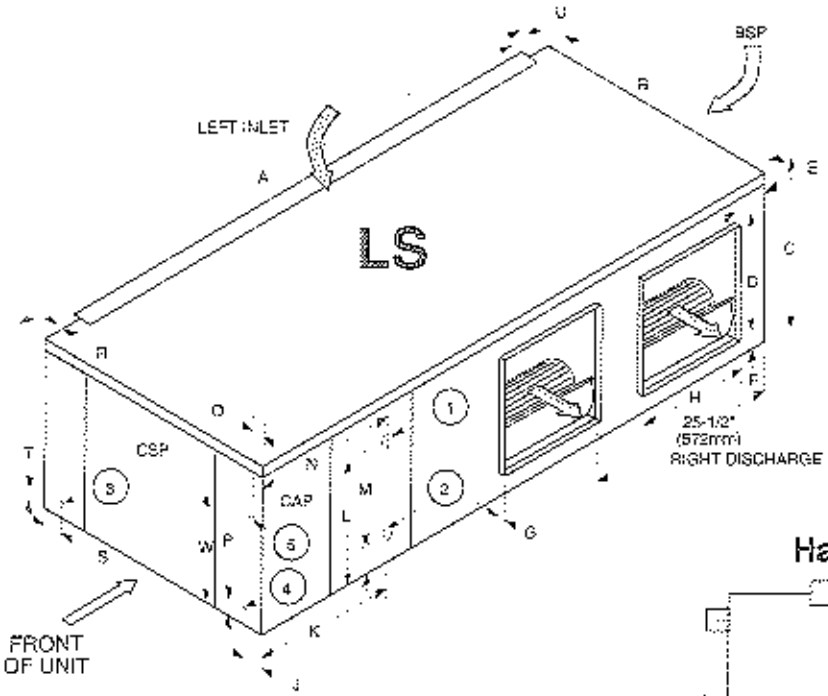

Note: All side panels are removable.

1. Water Outlet 1-1/4" FPT
2. Water Inlet 1-1/4" FPT
3. Condensate Drain 3/4" FPT
4. High Voltage Access 1-3/8" K.O.(35mm)
5. Low Voltage Access 1/2" DIA (13mm)

CAP - Control Access Panel
BSP - Blower Service Panel
CSP - Compressor Service Panel

Return Air Duct Size
18-1/4" High x 63-1/2" Wide
(464mm x 1613mm Wide)

Nominal Filter Size
16"x 20" x 1" Four Required
(406mm x 508mm x 25mm) Four Required

FLANGED FILTER RACK
VIEW AT INLET

Note: Leave one end of duct collar open for filter removal.

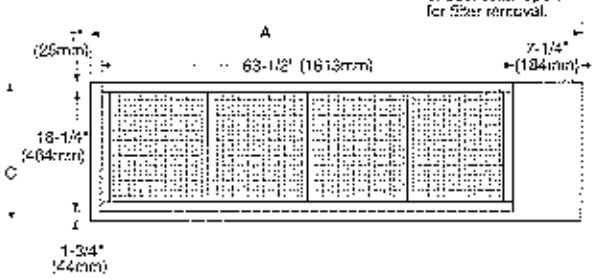

Hanger Bracket Dimensions

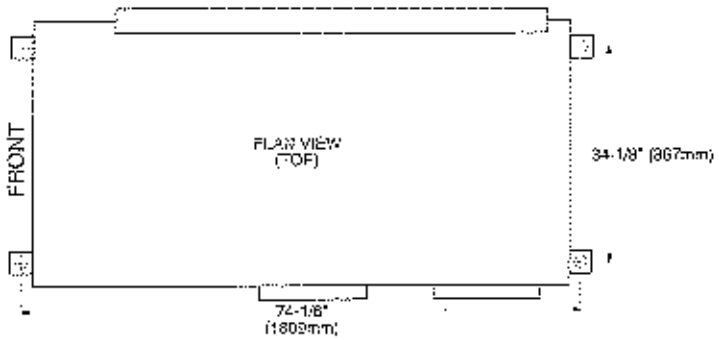

NOTE: Available in left return and straight blow only (LS) as shown.

MODEL		A	B	C	D	E	F	G	H	J	K	L	M	N	O	P	R	S	T	U	V
096	INCHES	72-1/4	36-1/4	21	15-1/8	3-1/4	3-1/4	1	15-1/8	1-7/8	18-1/4	17	3-1/4	20	1/2	2-1/2	1	4-1/8	1-1/4	7/8	13-1/2
	MM	1835	921	533	384	83	83	25	384	48	464	432	83	508	13	64	25	105	32	48	343
120	INCHES	72-1/4	36-1/4	21	15-1/8	2-5/8	4-1/4	1	15-1/8	1-7/8	18-1/4	18 5/8	3-1/4	22-1/4	1/2	2-1/2	1	4-1/8	1-1/4	7/8	13-1/2
	MM	1835	921	533	384	67	108	25	384	48	464	473	83	565	13	64	25	105	32	48	343

ClimateMaster works continually to improve its products. As a result, the design and specifications of each product at the time of order may be changed without notice and may not be as described herein. Please contact ClimateMaster's Customer Service Department at 1-405-745-6000 for specific information on the current design and specifications. Statements and other information contained herein are not express warranties and do not form the basis of any bargain between the parties, but are merely ClimateMaster's opinion or commendation of its products.

VS/VL Submittal Data

CLIMATEMASTER®

Contractor: _____ P.O.: _____

Engineer: _____

Project Name: _____ Unit Tag: _____

Dimensions
VS/VL 009/012

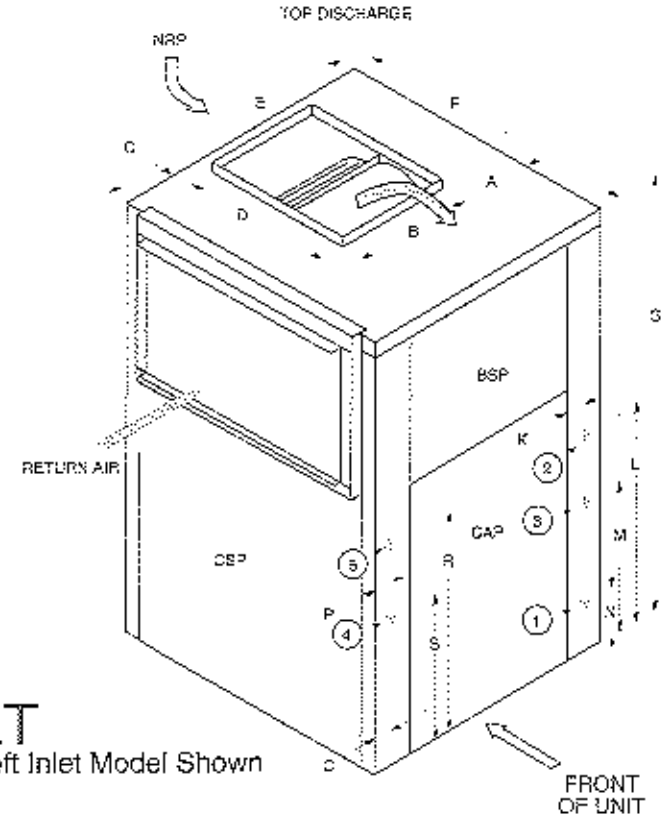

1. Water Inlet 1/2" FPT
2. Water Outlet 1/2" FPT
3. Condensate Drain 3/4" FPT
4. High Voltage Access 7/8" X 1-1/8" K.O. (22mm x 29mm K.O.)
5. Low Voltage Access 1/2" DIA (13mm DIA)

CAP - Control Access Panel
BSP - Blower Service Panel
CSP - Compressor Service Panel
NRP - Non-Removable Panel

Return Air Duct Size
9" High x 15-1/8" Wide
(229mm High x 384mm Wide)

Nominal Filter Size
10" x 16" x 1"
(254mm x 406mm x 25mm)

Air Flow Direction ⟹

LT
Left Inlet Model Shown

Optional Air Flow Pattern

RT

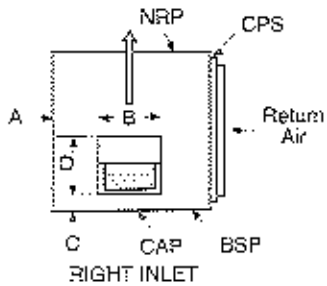

FRONT

MODEL		A	B	C	D	E	F	G	K	L	M	N	O	P	R	S
009	INCHES	3-7/8	9-7/8	1-3/4	7	19-1/8	19-1/8	24-1/8	1	8-3/4	5-5/8	2-3/8	1	1-3/4	9-3/4	1-11/16
	MM	98	251	44	178	486	486	613	25	222	143	60	25	44	248	43
012	INCHES	3-7/8	9-7/8	1-5/8	7-3/8	19-1/8	19-1/8	24-1/8	1	8-3/4	5-5/8	2-3/8	1	1-3/4	9-3/4	1-11/16
	MM	98	251	41	187	486	486	613	25	222	143	60	25	44	248	43

ClimateMaster works continually to improve its products. As a result, the design and specifications of each product at the time of order may be changed without notice and may not be as described herein. Please contact ClimateMaster's Customer Service Department at 1-405-745-6000 for specific information on the current design and specifications. Statements and other information contained herein are not express warranties and do not form the basis of any bargain between the parties, but are merely ClimateMaster's opinion or commendation of its products.

VS/VL Submittal Data

CLIMATEMASTER®

Contractor: _____ P.O.: _____

Engineer: _____

Project Name: _____ Unit Tag: _____

Dimensions
VS/VL 015/019

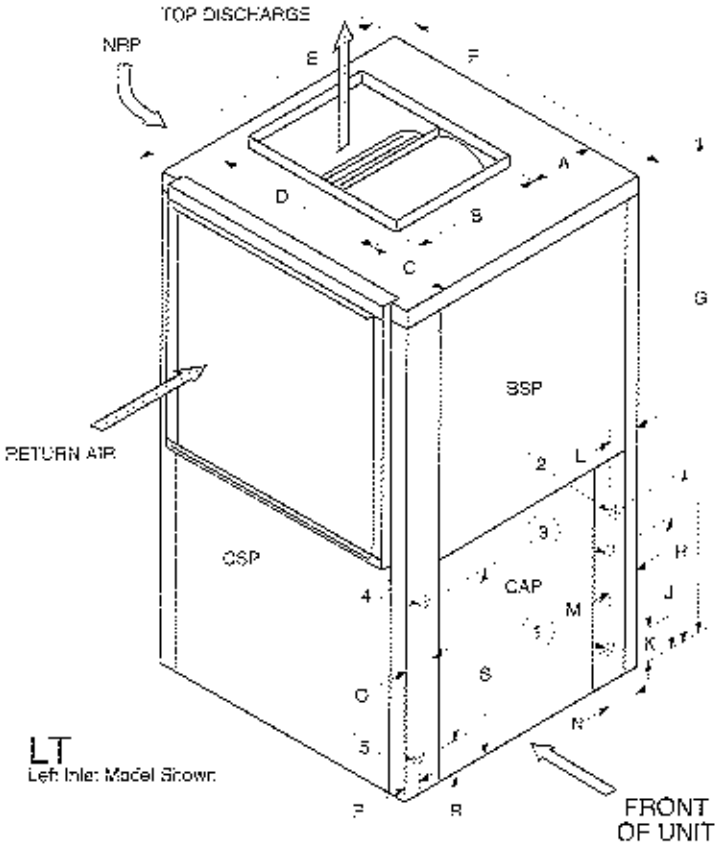

1. Water Inlet 1/2" FPT
2. Water Outlet 1/2" FPT
3. Condensate Drain 3/4" FPT
4. High Voltage Access 7/8" X 1 1/8" K.O. (22mm x 29mm K.O.)
5. Low Voltage Access 1/2" DIA (13mm DIA)

CAP - Control Access Panel
BSP - Blower Service Panel
CSP - Compressor Service Panel
NRP - Non-Removable Panel

Return Air Duct Size
18 3/4" High x 18 1/8" Wide
(476mm High x 460mm Wide)

Nominal Filter Size
20" x 20" x 1"
(508mm x 508mm x 25mm)

Air Flow Direction ⟹

Optional Air Flow Pattern

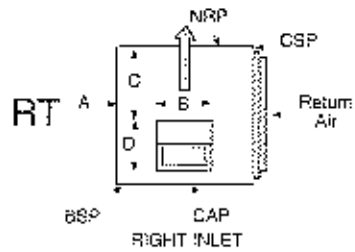

MODEL		A	B	C	D	E	F	G	H	J	K	L	M	N	O	P	R	S
015	INCHES	5-1/2	10	9-1/4	7-5/8	21-1/8	21-1/8	37-1/2	11-7/8	9-3/4	1-7/8	3-7/8	6	5-3/8	1-1/8	1-1/8	3	12-1/2
	MM	140	254	235	194	537	537	953	302	248	48	98	152	137	29	29	76	318
019	INCHES	6	9	5-5/8	12-5/8	21-1/8	21-1/8	37-1/2	12-7/8	9-3/4	1-7/8	3-7/8	6	5-3/8	1-1/8	1-1/8	3	12-1/2
	MM	152	229	143	321	537	537	953	327	248	48	98	152	137	29	29	76	318

ClimateMaster works continually to improve its products. As a result, the design and specifications of each product at the time of order may be changed without notice and may not be as described herein. Please contact ClimateMaster's Customer Service Department at 1-405-745-6000 for specific information on the current design and specifications. Statements and other information contained herein are not express warranties and do not form the basis of any bargain between the parties, but are merely ClimateMaster's opinion or commendation of its products.

VS/VL Submittal Data

Contractor: _____ P.O.: _____

Engineer: _____

Project Name: _____ Unit Tag: _____

Dimensions
VS/VL 024/030

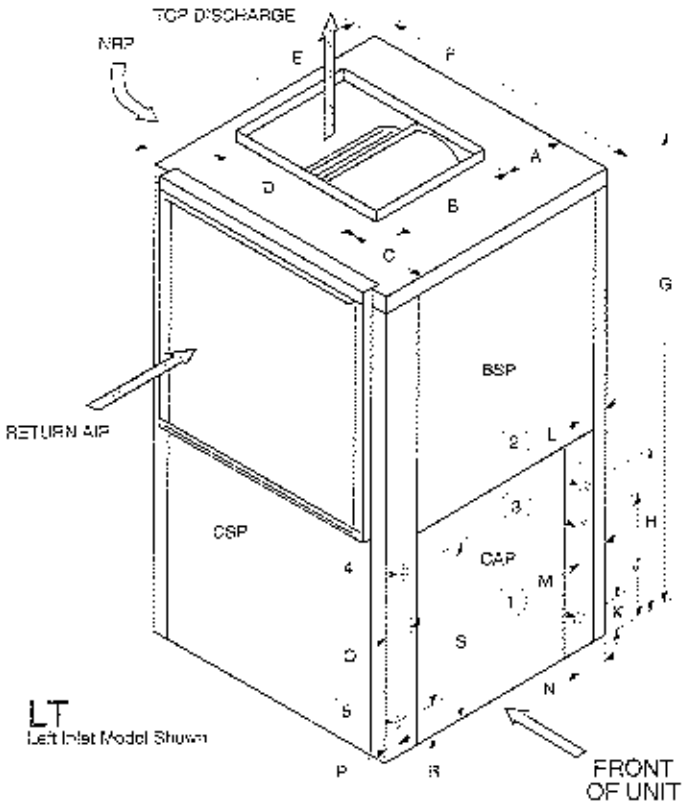

LT
Left Inlet Model Shown

1. Water Inlet 3/4" FPT
2. Water Outlet 3/4" FPT
3. Condensate Drain 3/4" FPT
4. High Voltage Access 7/8" X 1 1/8" K.O. (22mm x 29mm K.O.)
5. Low Voltage Access 1/2" DIA (13mm DIA)

CAP - Control Access Panel
BSP - Blower Service Panel
CSP - Compressor Service Panel
NRP - Non-Removable Panel

Return Air Duct Size
18 1/2" High x 20" Wide
(470mm High x 502mm Wide)

Nominal Filter Size
20" x 20" x 1"
(508mm x 508mm x 25mm)

Air Flow Direction ⟹

Optional Air Flow Pattern

RT

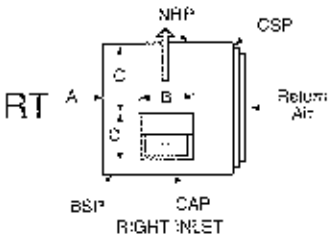

MODEL		A	B	C	D	E	F	G	H	J	K	L	M	N	O	P	R	S
024	INCHES	5-3/4	11-5/8	7-5/8	12-3/4	23-1/4	23-1/4	37-1/2	15-1/8	9-3/4	1-7/8	3-7/8	6	5-3/8	1-1/8	1-1/8	3	12-1/2
	MM	140	295	194	324	591	591	953	302	248	48	98	152	137	29	29	76	318
030	INCHES	5-3/4	11-5/8	7-5/8	12-3/4	23-1/4	23-1/4	37-1/2	15-1/4	9-3/4	1-7/8	3-7/8	6	5-3/8	1-1/8	1-1/8	3	12-1/2
	MM	140	295	194	324	591	591	953	387	248	48	98	152	137	29	29	76	318

ClimateMaster works continually to improve its products. As a result, the design and specifications of each product at the time of order may be changed without notice and may not be as described herein. Please contact ClimateMaster's Customer Service Department at 1-405-745-6000 for specific information on the current design and specifications. Statements and other information contained herein are not express warranties and do not form the basis of any bargain between the parties, but are merely ClimateMaster's opinion or commendation of its products.

VS/VL Submittal Data

CLIMATEMASTER®

Contractor: _____ P.O.: _____

Engineer: _____ _____

Project Name: _____ Unit Tag: _____

Dimensions
VS/VL 036/042

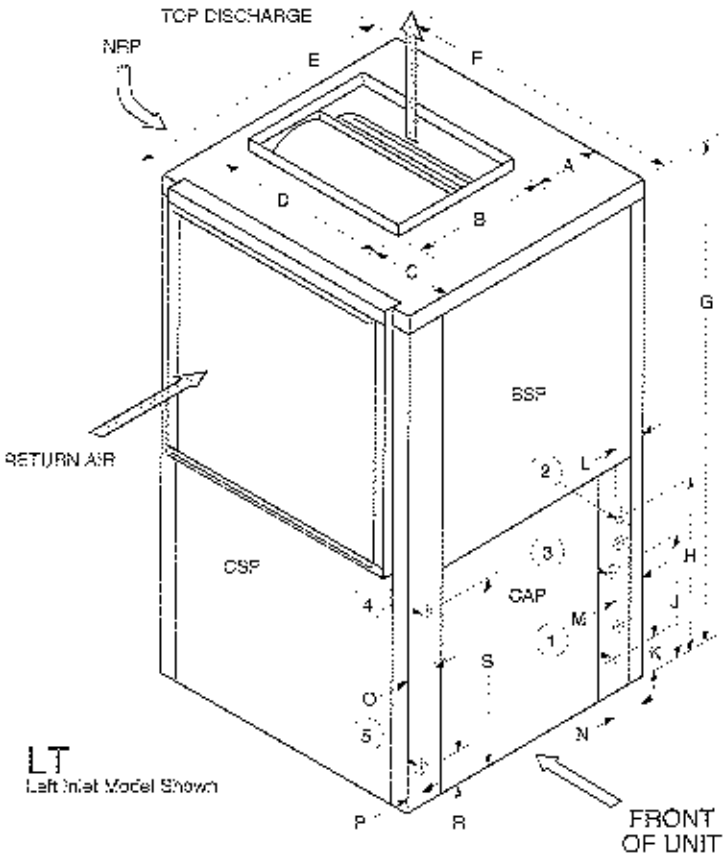

LT
Left Inlet Model Shown

1. Water Inlet 3/4" FPT
2. Water Outlet 3/4" FPT
3. Condensate Drain 3/4" FPT
4. High Voltage Access 7/8" X 1 1/8" K.O. (22mm x 29mm K.O.)
5. Low Voltage Access 1/2" DIA (13mm DIA)

CAP - Control Access Panel
BSP - Blower Service Panel
CSP - Compressor Service Panel
NRP - Non-Removable Panel

Return Air Duct Size
22 1/2" High x 23 3/4" Wide
(572mm High x 603mm Wide)

Nominal Filter Size
24" x 24" x 1"
(610mm x 610mm x 25mm)

Air Flow Direction ⟹

Optional Air Flow Pattern

RT

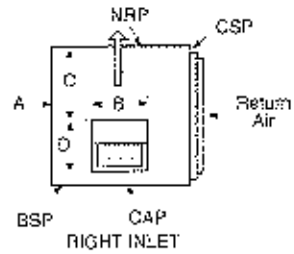

FRONT

MODEL		A	B	C	D	E	F	G	H	J	K	L	N	O	P	R	S
036	INCHES	4-1/4	12-5/8	6-7/8	11-5/8	25-3/8	25-3/8	42	15-1/2	7-1/2	2-3/8	4	5-3/8	1-1/8	1-1/8	3	12-1/2
	MM	108	321	175	295	644	644	1062	394	191	60	102	137	29	29	76	318
042	INCHES	2	12-5/8	6-1/4	12-7/8	25-3/8	25-3/8	42	15-1/2	7-1/2	2-3/8	4	5-3/8	1-1/8	1-1/8	3	12-1/2
	MM	51	321	159	327	644	644	1062	394	191	60	102	137	29	29	76	318

ClimateMaster works continually to improve its products. As a result, the design and specifications of each product at the time of order may be changed without notice and may not be as described herein. Please contact ClimateMaster's Customer Service Department at 1-405-745-6000 for specific information on the current design and specifications. Statements and other information contained herein are not express warranties and do not form the basis of any bargain between the parties, but are merely ClimateMaster's opinion or commendation of its products.

VS/VL Submittal Data

CLIMATEMASTER®

Contractor: _____ P.O.: _____

Engineer: _____

Project Name: _____ Unit Tag: _____

Dimensions
VS/VL 048/060

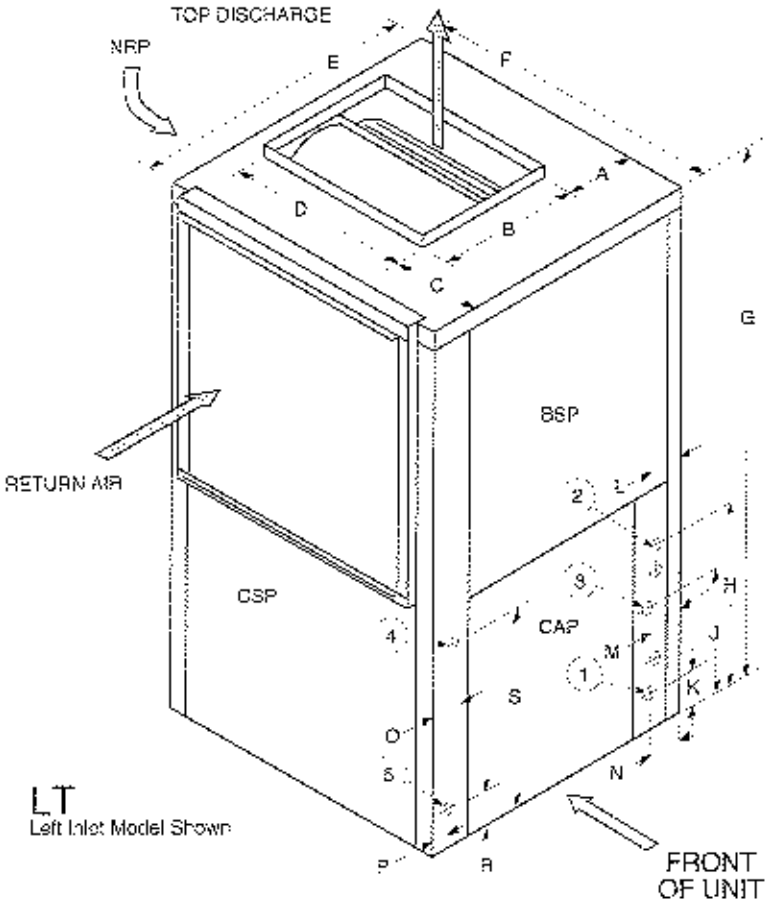

LT
Left Inlet Model Shown

1. Water Inlet 1" FPT
2. Water Outlet 1" FPT
3. Condensate Drain 3/4" FPT
4. High Voltage Access 7/8" X 1 1/8" K.O. (22mm x 29mm K.O.)
5. Low Voltage Access 1/2" DIA (13mm DIA)

CAP - Control Access Panel
BSP - Blower Service Panel
CSP - Compressor Service Panel
NRP - Non-Removable Panel

Return Air Duct Size
24" High x 28" Wide
(610mm High x 711mm Wide)

Nominal Filter Size
28" x 25" x 1"
(711mm x 635mm x 25mm)

Air Flow Direction

Optional Air Flow Pattern

RT

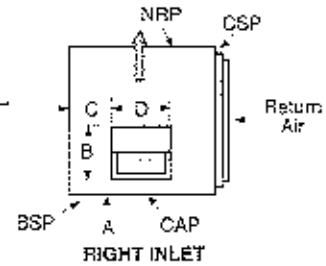

MODEL		A	B	C	D	E	F	G	H	J	K	L	N	O	P	R	S
048/060	INCHES	1-1/2	14-7/8	6-1/4	15-5/8	28-1/8	28-1/8	43-1/4	15-3/8	9-1/2	1-1/2	3-1/4	4-5/8	1-1/8	1-1/8	3	12-1/2
	MM	38	378	159	397	714	714	1099	391	241	28	83	117	29	29	76	318

ClimateMaster works continually to improve its products. As a result, the design and specifications of each product at the time of order may be changed without notice and may not be as described herein. Please contact ClimateMaster's Customer Service Department at 1-405-745-6000 for specific information on the current design and specifications. Statements and other information contained herein are not express warranties and do not form the basis of any bargain between the parties, but are merely ClimateMaster's opinion or commendation of its products.