CLIMADRY

CONTENTS

CLIMADRY
SEQUENCE OF OPERATION

May 1, 1997

The Climadry is a dual air path air conditioning unit. One air path is dedicated to the conditioning of the fresh air from outside, the second air path is dedicated to the conditioning of the return air from the space (store). The two air paths are mixed together at the inlet of the supply air fan and delivered to the conditioned space.

Climadry has three basic modes of operation as follows :

DRYOUT Mode
CO_2 Mode
NORMAL Mode

A Microprocessor controller, sensing space temperature, space humidity, space CO_2 level, outside air temperature and humidity determines the mode of operation for the unit. DRYOUT mode is considered to be the highest priority to maintain space humidity. CO_2 level gets a second priority. Once the space humidity and CO_2 level is under control, Climadry resumes the Normal mode of operation.

In each mode of operation, microprocessor controls the operation of the compressors and the position of the Return Air (R/A) Bypass damper **DA1** and the Outside Air (O/A) damper **DA2** as required by specific mode of operation and the space conditions. Climadry incorporates four compressors. Compressor No. 1 and 2 are two speed compressors dedicated to the cooling of the outside air under **NORMAL** and **CO_2** mode and cooling of the portion of the Return Air in **DRYOUT** mode. Compressor No. 3 and 4 are dedicated to the cooling and heating of the Return Air as required by the space conditions.

FAN OPERATION

Climadry Fan must operate continuously. When Fan start/stop switch is turned on, the controller starts the FAN. A pressure switch sensing differential pressure across the fan provides Fan confirmation to the controller. It is only after the fan confirmation that the unit operation can resume. If the microprocessor fails to confirm the fan operation, all microprocessor outputs are turned off and alarm status is indicated on the display.

DRY OUT MODE

If the space humidity rises above the set point (45%), R/A bypass damper DA1 is fully open , O/A damper DA2 is fully closed. These damper positions shut off the O/A and allow a portion of R/A to circulate over O/A coils. Compressor #1 and #2 are activated in High speed operation. This mode of operation continues until the space humidity falls below the setpoint minus the differential (5%). During DRYOUT if the space temperature falls below the space temperature setpoint, compressor #3 and #4 are activated in heating mode.

PRELIMINARY

CO_2 MODE

CO_2 level (ppm) sensor is located in the conditioned space. When CO_2 level rises above the setpoint (1000 ppm), CO_2 mode of operation is initiated provided that the space humidity is under control. In CO_2 mode, O/A Damper starts to open from it's NORMAL(minimum position) setting, allowing more outside air circulation. If CO_2 level continues to rise, the O/A damper continues to open. When CO_2 level reaches the CO_2 setpoint (1000) plus the Proportional Band Setpoint (25), O/A Damper is fully open allowing maximum amount of air to enter through the damper **DA2**. NORMAL position of the O/A damper **DA2** is set by the minimum position potentiometer located in the control box.

R/A Bypass damper **DA1** remains closed during CO2 mode. Operation of Compressor No. 1 and 2 continues to be controlled from the Enthalpy of the outside air as described under NORMAL mode. Operation of Compressor No. 3 and 4 continues to be controlled from the space temperature as described under NORMAL mode.

NORMAL MODE

When space humidity and CO2 level is under control, Climadry resumes normal mode of operation. In Normal mode O/A damper **DA2** assumes a minimum position as set by the minimum position potentiometer to allow design outside air flow to be delivered to the space. R/A bypass damper **DA1** remains in the closed position.

Outside Air Cooling

Microprocessor sensing outside air temperature and humidity calculates the Enthalpy of the outside air. Enthalpy of the outside air dictates the number of cooling stage required for proper cooling of the outside air. There are four stages of O/A cooling operation, achieved by staging the operation of the Compressor No.1 and 2 at Low or High speed. First stage starts Compressor No. 1 at Low speed. Second stage shifts the Compressor No. 1 to High Speed. Third stage starts the compressor No. 2 at Low Speed. Fourth stage shifts compressor No. 2 to High speed.

An averaging temperature sensor located behind the O/A cooling coil provides a feedback data on the temperature of air leaving O/A coil. If this temperature is above 50 Deg. F, the controller forces the operation to the next stage until the O/A leaving temperature drops below 45 Deg F.

Each stage of operation has a minimum run time of 10 minutes and minimum off time of 5 minutes. Each compressor is provided with a high pressure safety switch, low pressure safety switch and compressor motor winding temperature stat. If any of the safety switches open compressor operation is locked out and compressor safety alarm is indicated on the display. Manual reset is required to resume compressor operation.

Compressor #1 and #2 are provided with water regulating valves to maintain proper refrigerant discharge pressure at low and high speed and under varying conditions of loop water temperature. Compressor #2 is provided with a hot gas bypass valve to

protect the coils from freezing under adverse conditions.

Return Air Cooling and Heating

A temperature sensor mounted in the space provides temperature data to the microprocessor. If the space temperature rises above the set point (75 Deg F) Compressor No. 3 starts on cooling. Further rise in the space temperature starts compressor No. 4 in cooling. If the space temperature drops below the setpoint, mode of operation is shifted to HEATING. Reversing valves are de-energized in heating mode. Compressor No. 3 is started as space temperature falls 1 Deg F below setpoint. Compressor No. 4 is started as space temperature falls 2 Deg F below setpoint.

Each stage of operation has a minimum run time of 10 minutes and minimum off time of 5 minutes. Each compressor circuit is provided with a high pressure safety switch, low pressure safety switch, compressor motor winding temperature stat (10 HP and larger compressors) and water coil freezstat. If any of the safety switches open, compressor operation is locked out and the compressor safety alarm is indicated on the display.

1820PERF

PERFORMANCE DATA CD15/20

FRESH AIR PATH

WATER FLOW RATE GPM	FRESH AIR ENT. DB/WB DEG F	LOOP WATER ENT. DEG F	TOTAL COOLING BTUH	SENSIBLE COOLING BTUH	COMPRESOR POWER INPUT WATTS	GROSS EER	HEAT REJECT. BTUH	PRESSURE DROP WATER FT H2O
60	89/75	85	239,286	128,073	17,458	13.7	298,853	26
60	95/76	85	244,700	141,590	17,561	13.9	304,618	26
60	92/77	85	248,842	130,668	17,622	14.1	308,968	26
60	95/79	85	258,579	133,380	17,798	14.5	319,306	26

FRESH AIR SCFM	2,500
RETURN AIR SCFM	10,000
EXT. STATIC PRESSURE	0.75
FAN MOTOR HP	7.5
FAN MOTOR WATTS	4,972

RETURN AIR PATH

	COOLING							HEATING						
WATER FLOW RATE GPM	RETURN AIR ENT. DB/WB DEG F	LOOP WATER ENT. DEG F	TOTAL COOLING BTUH	SENSIBLE COOLING BTUH	COMPRESOR POWER INPUT WATTS	GROSS EER	HEAT REJECT. BTUH	RETURN AIR ENT. DB DEG F	LOOP WATER ENT. DEG F	TOTAL HEATING BTUH	HEAT OF ABSORP. BTUH	COMPRESOR POWER INPUT WATTS	GROSS COP	PRESSURE DROP WATER FT H2O
42	75/61	85	177,230	160,848	10,998	16.1	214,755	70	60	189,754	153,396	10,658	5.2	12
								70	70	212,006	173,655	11,240	5.5	12

NOTE : CAPACITIES, EER AND COP ARE GROSS. FAN MOTOR WATTS , HEAT LOSS OR GAIN IS NOT INCLUDED.

PRELIMINARY

3025PERF

PERFORMANCE DATA CD30/25

16-May-97

FRESH AIR PATH

WATER FLOW RATE GPM	FRESH AIR ENT. DB/WB DEG F	LOOP WATER ENT. DEG F	TOTAL COOLING BTUH	SENSIBLE COOLING BTUH	COMPRESOR POWER INPUT WATTS	GROSS EER	HEAT REJECT. BTUH	PRESSURE DROP WATER FT H2O
70	89/75	85	272,883	144,850	22,444	12.2	349,462	28
70	95/76	85	278,479	161,215	22,552	12.3	355,428	28
70	92/77	85	278,209	151,429	22,546	12.3	355,136	28
70	95/79	85	294,454	151,005	22,840	12.9	372,384	28

FRESH AIR SCFM	3,000
RETURN AIR SCFM	11,000
EXT. STATIC PRESSURE	0.75
FAN MOTOR HP	10
FAN MOTOR WATTS	6,462

RETURN AIR PATH

	COOLING							HEATING						
WATER FLOW RATE GPM	RETURN AIR ENT. DB/WB DEG F	LOOP WATER ENT. DEG F	TOTAL COOLING BTUH	SENSIBLE COOLING BTUH	COMPRESOR POWER INPUT WATTS	GROSS EER	HEAT REJECT. BTUH	RETURN AIR ENT. DB DEG F	LOOP WATER ENT. DEG F	TOTAL HEATING BTUH	HEAT OF ABSORP. BTUH	COMPRESOR POWER INPUT WATTS	GROSS COP	PRESSURE DROP WATER FT H2O
84	75/61	85	336,162	294,394	24,758	13.7	422,636	70	60	423,334	328,207	27,880	4.5	12
								70	70	477,610	376,321	29,686	4.7	12

NOTE : CAPACITIES, EER AND COP ARE GROSS. FAN MOTOR WATTS , HEAT LOSS OR GAIN IS NOT INCLUDED.

PRELIMINARY

CLIMADRY SERIES ELECTRICAL DATA

MODEL	POWER SUPPLY V/PH/Hz	COMPRESSOR				BLOWER MOTOR		TOTAL FLA	MIN CKT AMPS	MAX. FUSE*
			QTY	RLA	LRA	HP	FLA			
CD15/20H	208-230/3/60	RETURN AIR	2	25	156	7.5	23.8	149.8	159	175
		FRESH AIR LEAD	1	38	222					
		FRESH AIR LAG	1	38	222					
CD15/20F	460-3-60	RETURN AIR	2	12	100	7.5	10.8	69.2	74	80
		FRESH AIR LEAD	1	17.2	95					
		FRESH AIR LAG	1	17.2	95					
CD30/25H	208-230/3/60	RETURN AIR	2	57.2	376	10	28	239.7	255	300
		FRESH AIR LEAD	1	38	222					
		FRESH AIR LAG	1	59.3	320					
CD30/25F	460-3-60	RETURN AIR	2	25.4	142	10	12.8	106.5	113	125
		FRESH AIR LEAD	1	17.2	95					
		FRESH AIR LAG	1	25.7	144					

69773700

"VERTICAL" UNITS

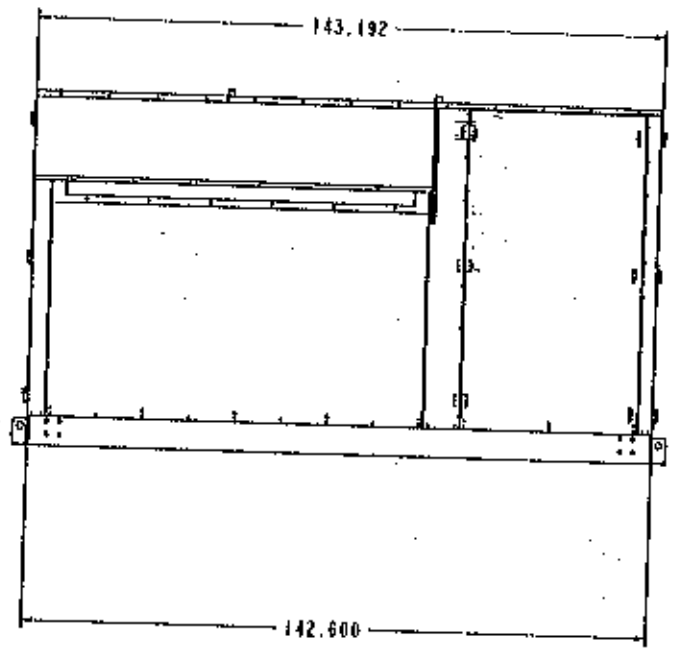

LEFT SIDE VIEW

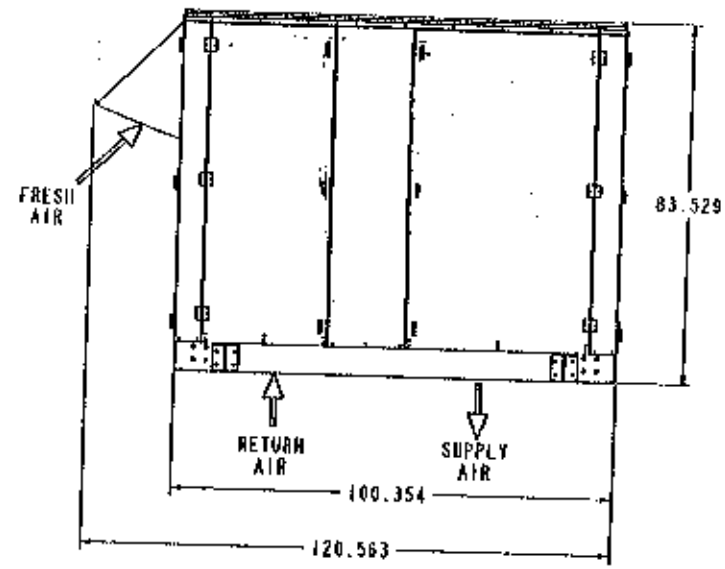

FRONT VIEW

WATER IN/OUT CONN.		
MODEL	RET. AIR CIRCUIT	FRESH AIR CIRCUIT
CD15/20	2" FPT	2" FPT
CD30/25	2" FPT	2" FPT

Climate Master

69773700

OBJECT:69773700_2 DATE:20-Jan-97 14:46:23

NAME:WALL

PRELIMINARY

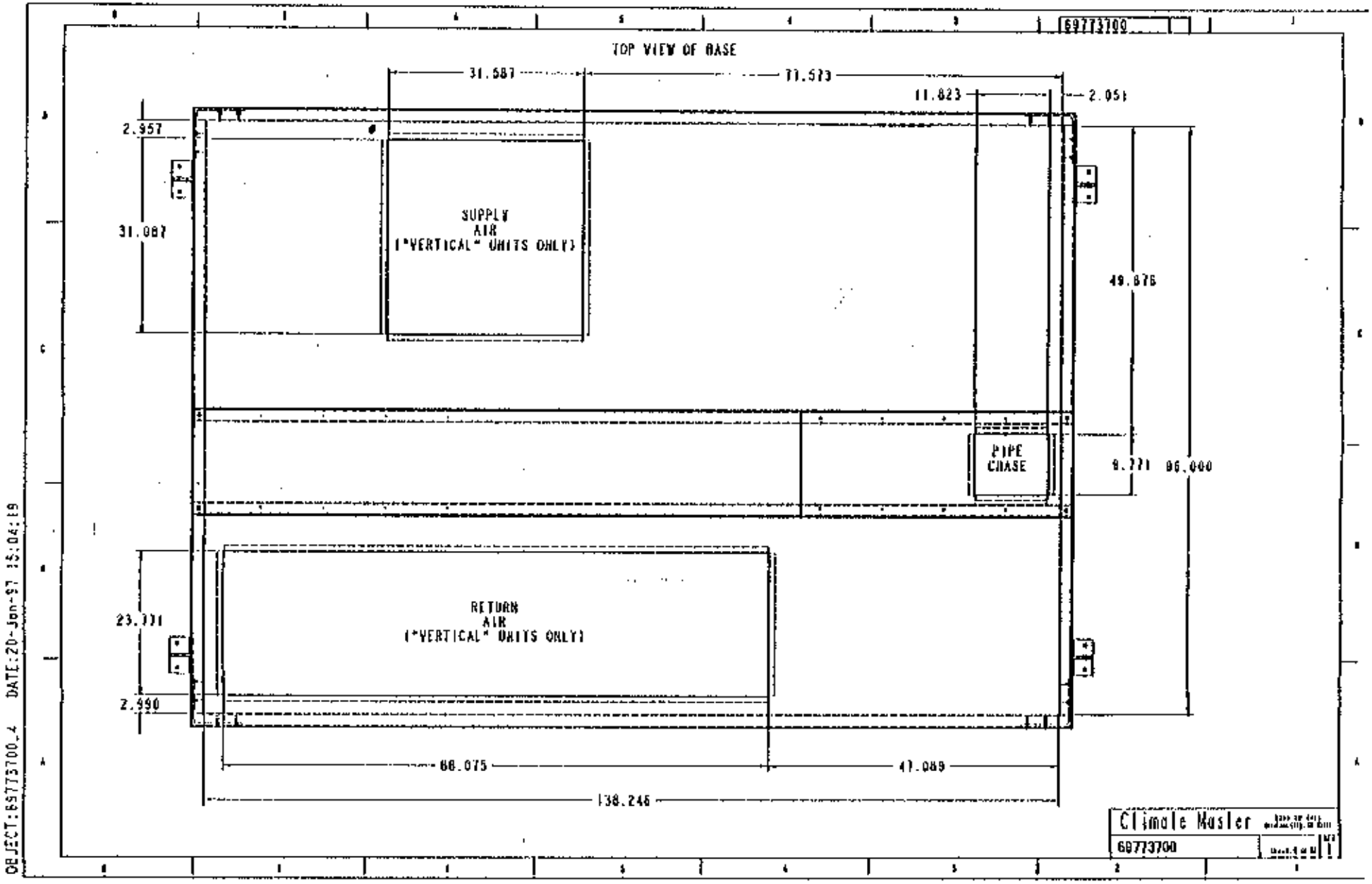

OBJECT:69773700_4 DATE:20-Jan-97 15:04:19

NAME:WALL

PRELIMINARY

69773700

WATER IN/OUT CONN.		
MODEL	RET. AIR CIRCUIT	FRESH AIR CIRCUIT
CD15/20	2" FPT	2" FPT
CD30/25	2" FPT	2" FPT

"HORIZONTAL" UNITS

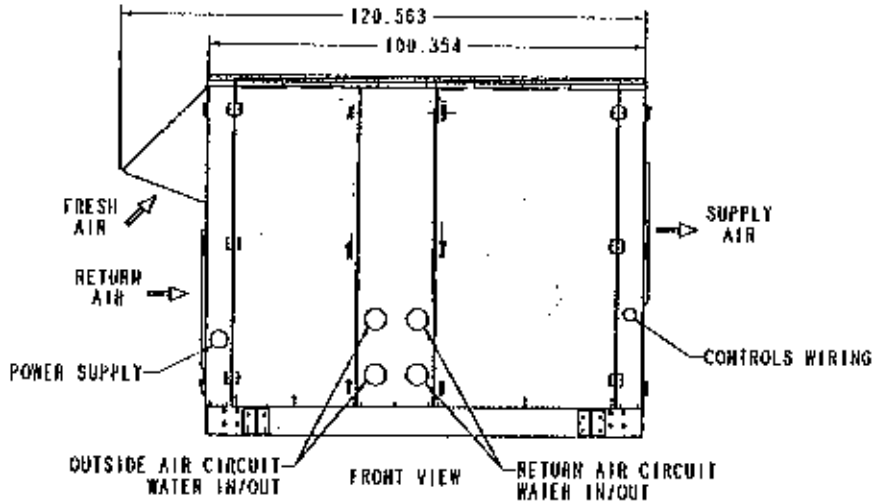

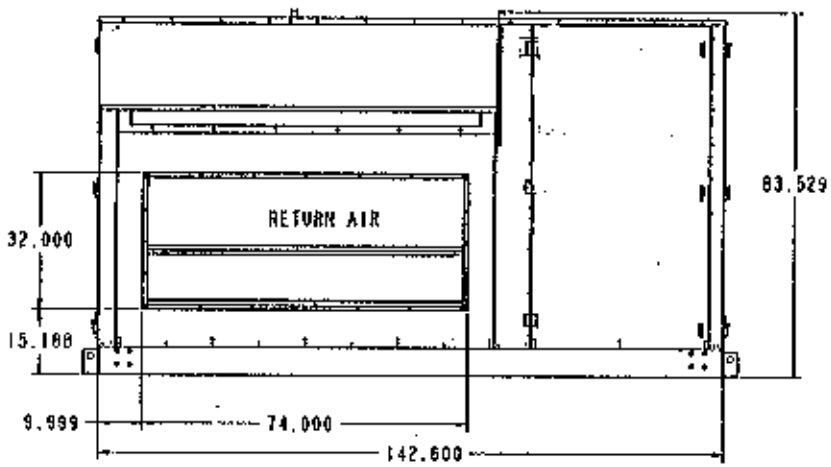

LEFT SIDE VIEW

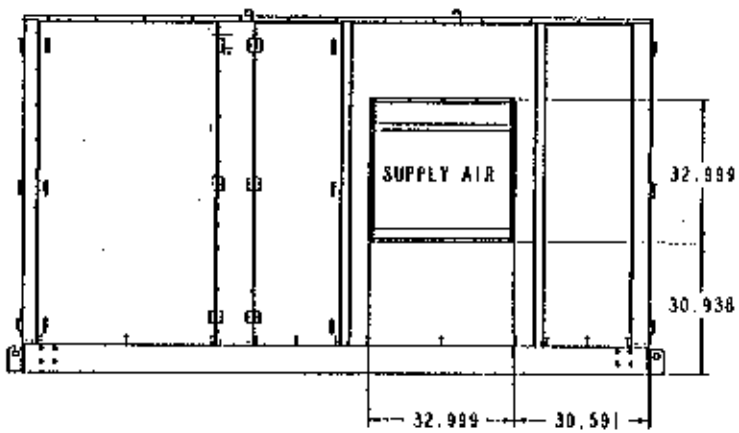

RIGHT SIDE VIEW

Climate Master

69773700

OBJECT:69773700_3 DATE:20-Jan-97 14:55:24

NAME:WALL

PRELIMINARY

ID NUMBER	PART#	DESCRIPTION	TYPE	QTY.
1	2X4_132	2X4 132.25 LONG	PART	2
2	2X4_90	2X4 90 LONG	PART	2
3	69127050	H12-14X5/8SCR SNR#826-D20-26950-959	PART	54
4	69826201	SIDE, ROOF, CURB	PART	2
5	69826202	FRONT/BACK, ROOF CURB	PART	2
6	69826203	SUPPORT, CENTER, ROOF CURB	PART	2
7	69826204	SUPPORT, CENTER, ROOF CURB	PART	1
8	69826205	SUPPORT, CENTER, ROOF CURB	PART	2
9	69826206	ANGLE, ROOF CURB	PART	4

69826200

REV	DESCRIPTION	FROM	DATE
-	INITIAL RELEASE	97-003	26-Mar-97

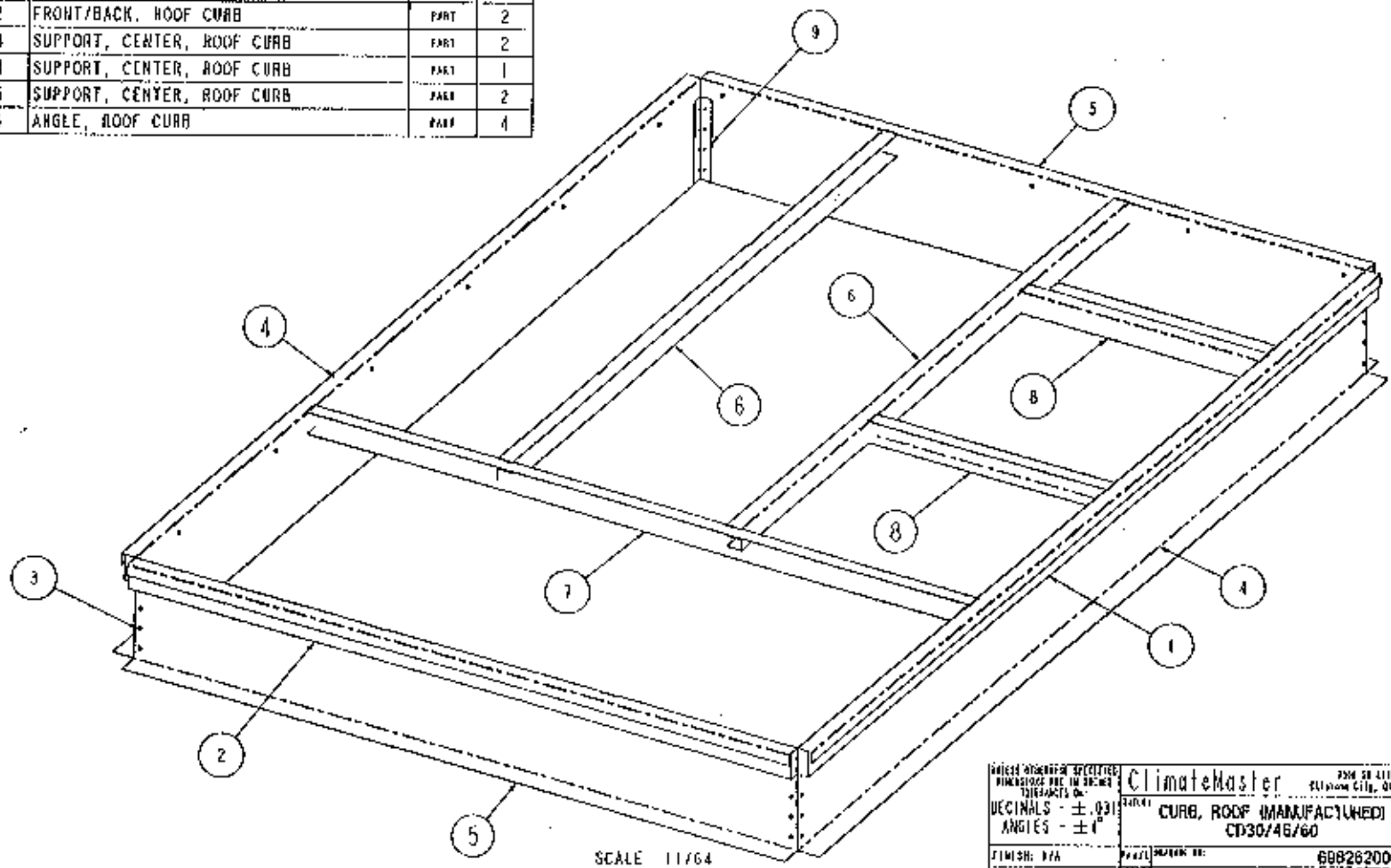

SCALE 1:64

UNLESS OTHERWISE SPECIFIED DIMENSIONS ARE IN INCHES TOLERANCES ON:
DECIMALS - ±.031
ANGLES - ±1°

FINISH: N/A

MATERIAL: N/A

ClimateMaster

TITLE: CURB, ROOF (MANUFACTURED) CD30/46/60

SIZE D

DRAWN B. HALL

DESIGN S. SKITH

SCALE: 1:1

Sheet 1 OF 2

DRAWING NO: 69826200

REV -

OBJECT: 69826200_1 DATE: 11-Apr-97 09:51:17

NAME: WALL

PRELIMINARY

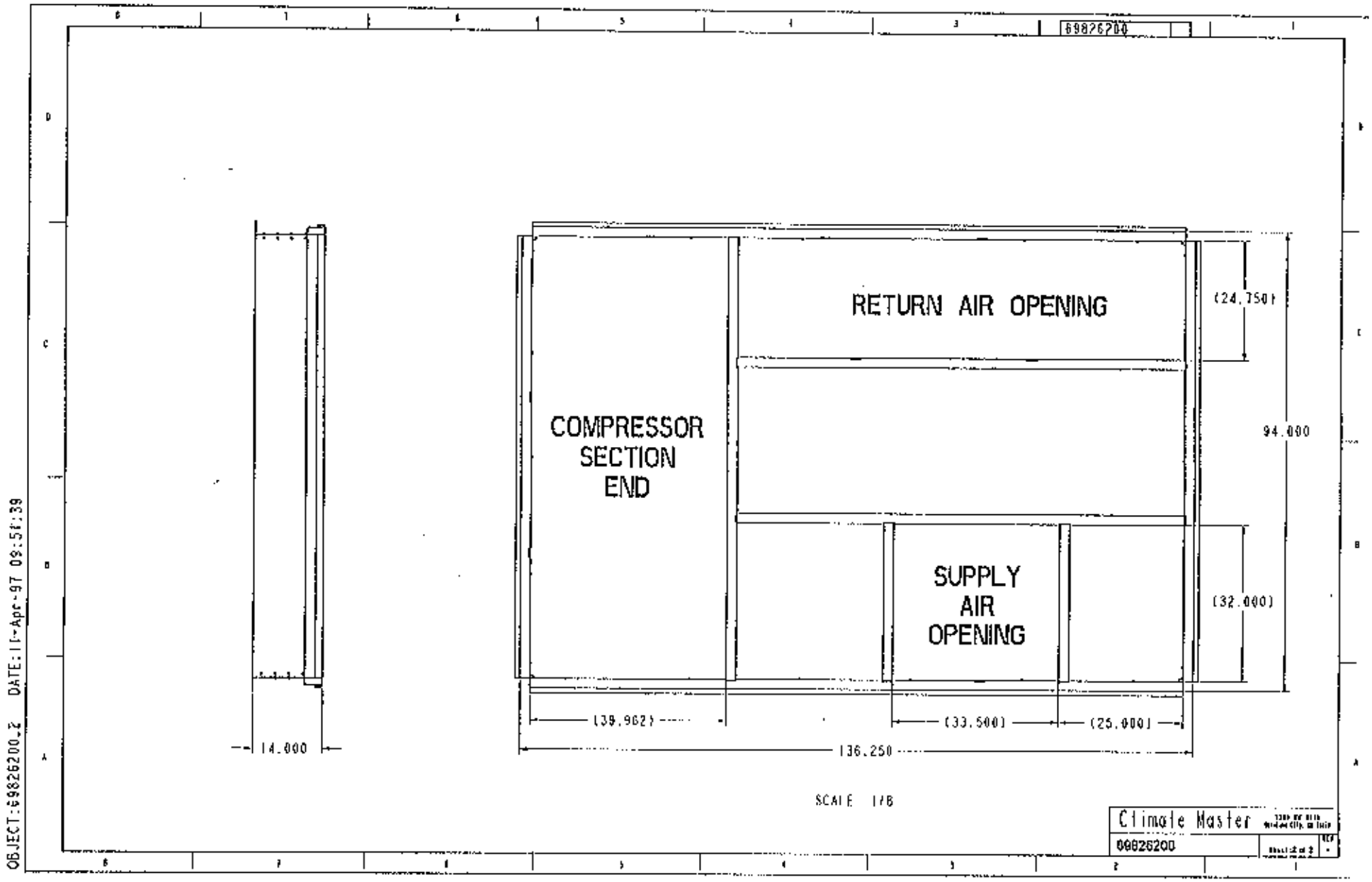

PRELIMINARY

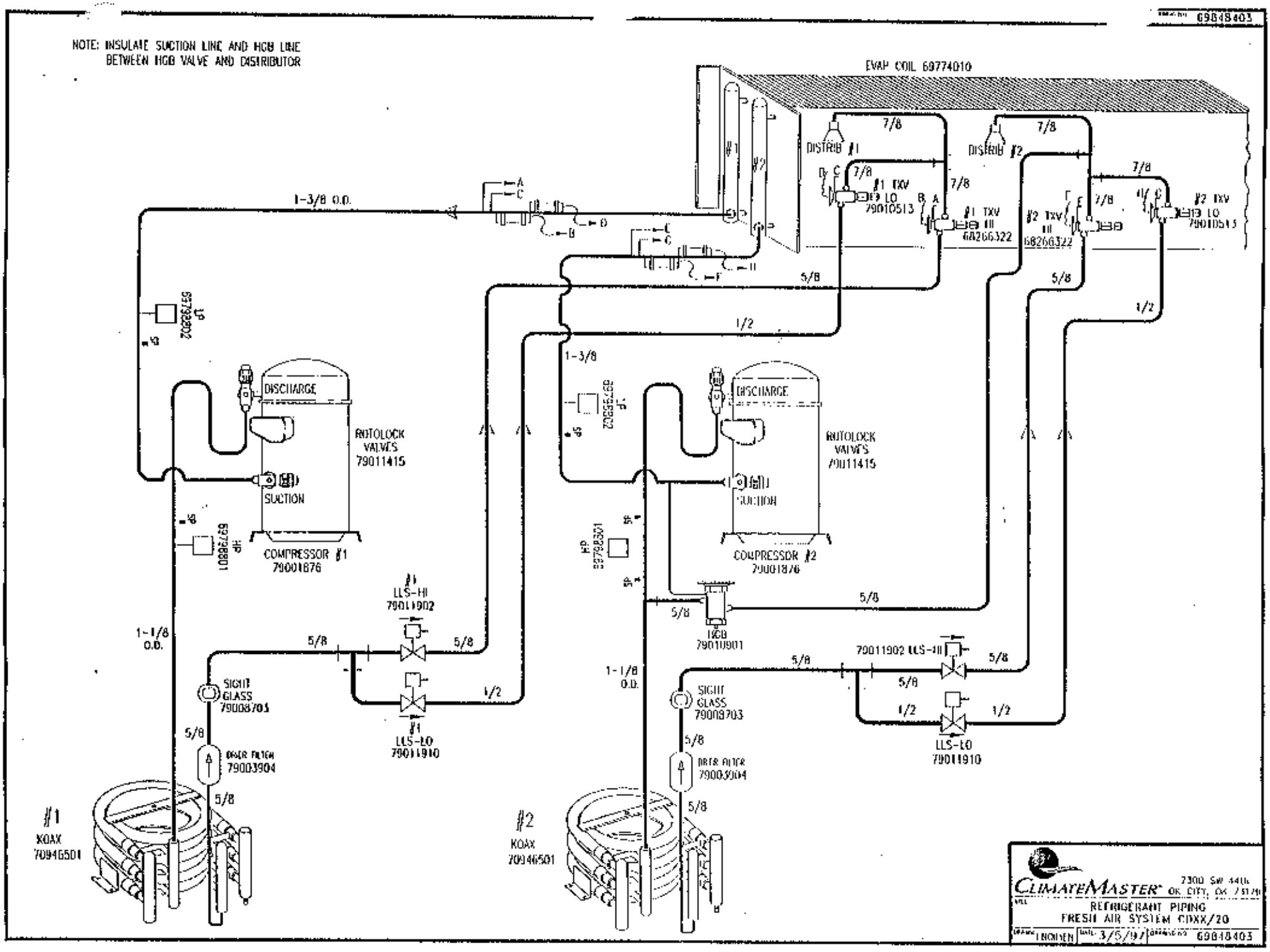
69848403
NOTE: INSULATE SUCTION LINE AND HGB LINE BETWEEN HGB VALVE AND DISTRIBUTOR
EVAP COIL 69774010
DISTRIB #1
DISTRIB #2
7/8
#1 TXV LO 79010513
#1 TXV HI 68266322
#2 TXV HI 68266322
#2 TXV LO 79010513
1-3/8 O.D.
5/8
1/2
1-3/8
HP 69798302
HP 69798301
DISCHARGE
SUCTION
ROTOLOCK VALVES 79011415
COMPRESSOR #1 79001876
COMPRESSOR #2 79001876
#1 LLS-HI 79011902
#1 LLS-LO 79011910
HGB 79010901
79011902 LLS-HI
LLS-LO 79011910
1-1/8 O.D.
SIGHT GLASS 79008703
DRYER FILTER 79003904
#1 KOAX 70946501
#2 KOAX 70946501
CLIMATEMASTER
7300 SW 44th OK. CITY, OK. 73179
RETRIGERANT PIPING
FRESH AIR SYSTEM CDXX/20
ENGINEER
DATE 3/5/97
69848403

69848402

CD 15XX-SYSTEM #3(YELLOW) & #4(GREEN) REFRIGERANT PIPING

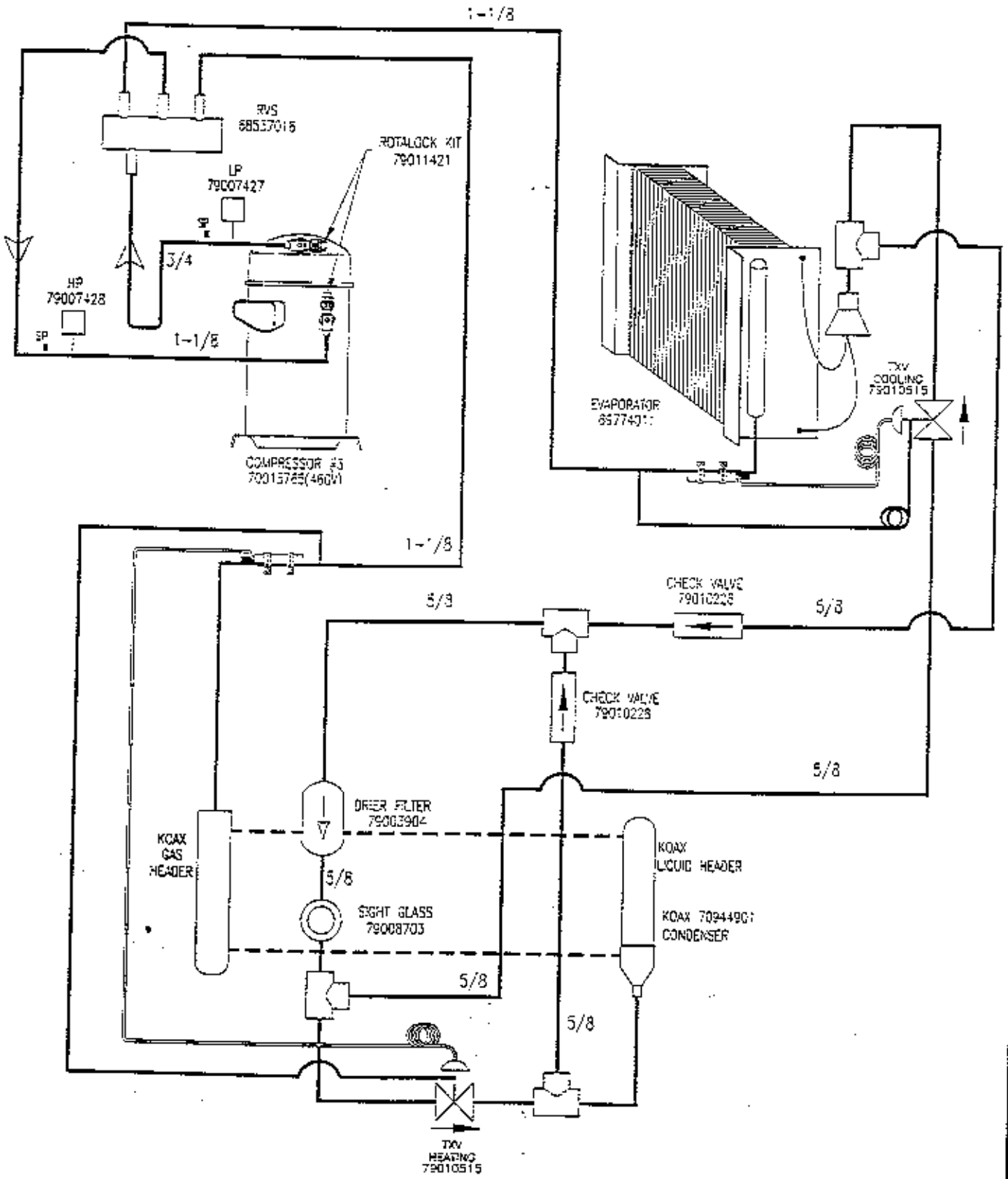

NOTE: SINGLE CIRCUIT SHOWN. SYSTEM #3 AND #4 ARE SCHEMATICALLY IDENTICAL.

APR Corporation	REFRIGERANT PIPING RETURN AIR SYSTEM (CD 15XX)	DRAWING #	SHEET #
		69848402 06 JAN 97	1

10A

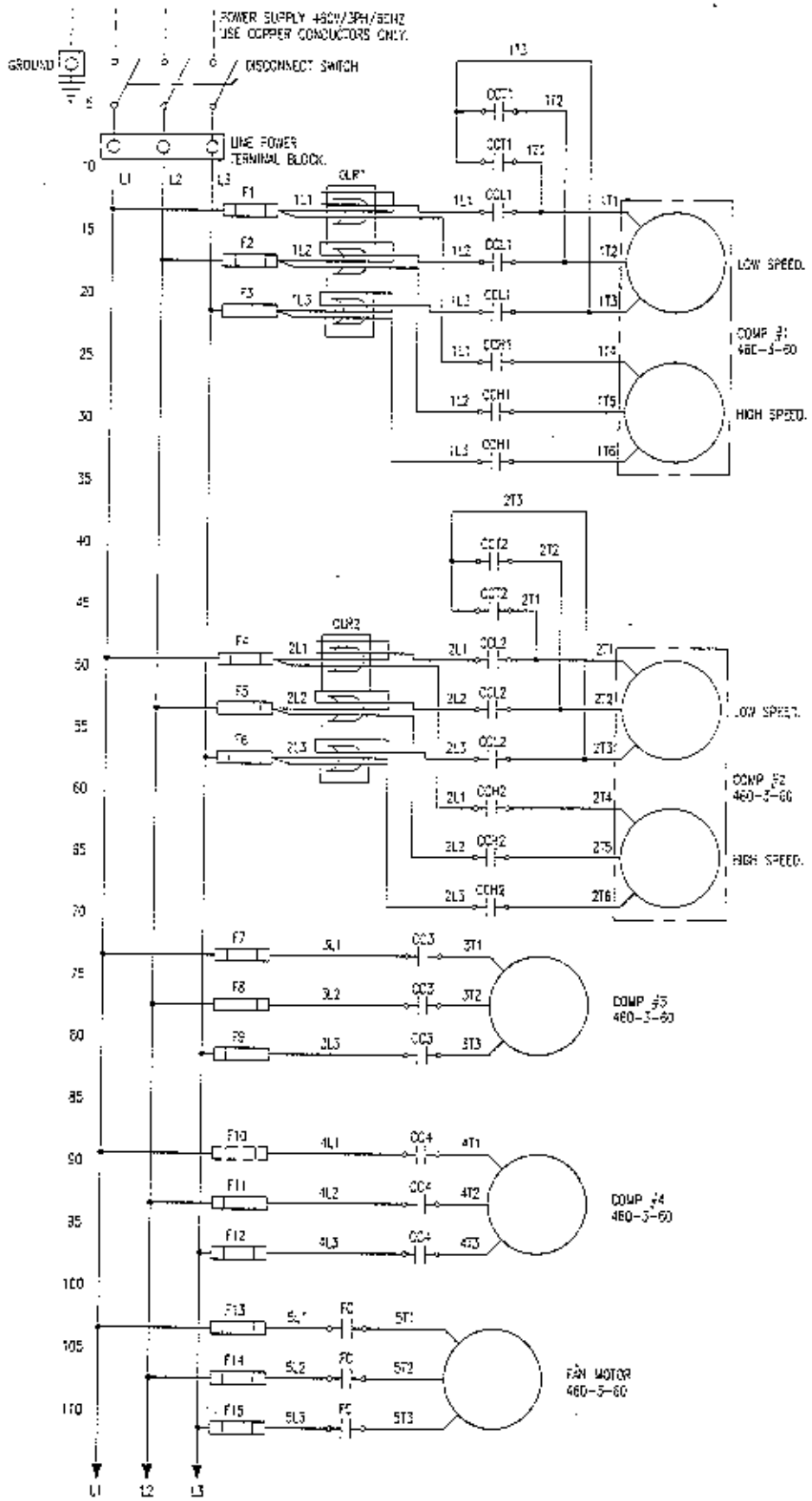

MODEL NUMBER	DRAWING #	SHEET #
CLIMADRY MODEL CD 15/20F STANDARD UNIT WITH 5:10 HP FAN MOTOR	79714401 4 MAR 97	1 OF 3

CLIMATEMASTER

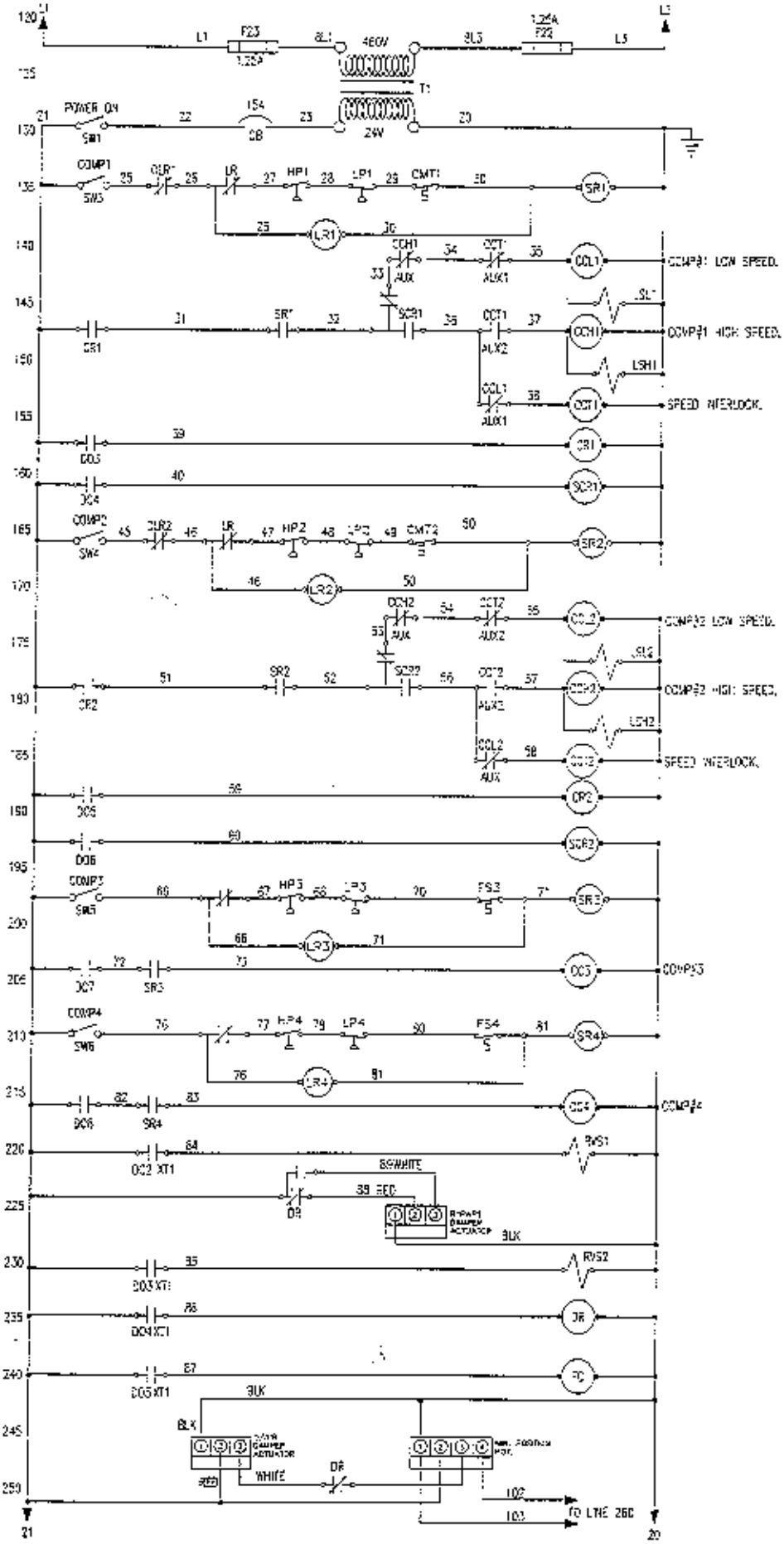

MODEL NUMBER	DRAWING #	SHEET #
CLIMADRY MODEL CD 15/20F STANDARD UNIT WITH 5:10 HP FAN MOTOR	79714401 4 MAR 97	2 OF 3

11A

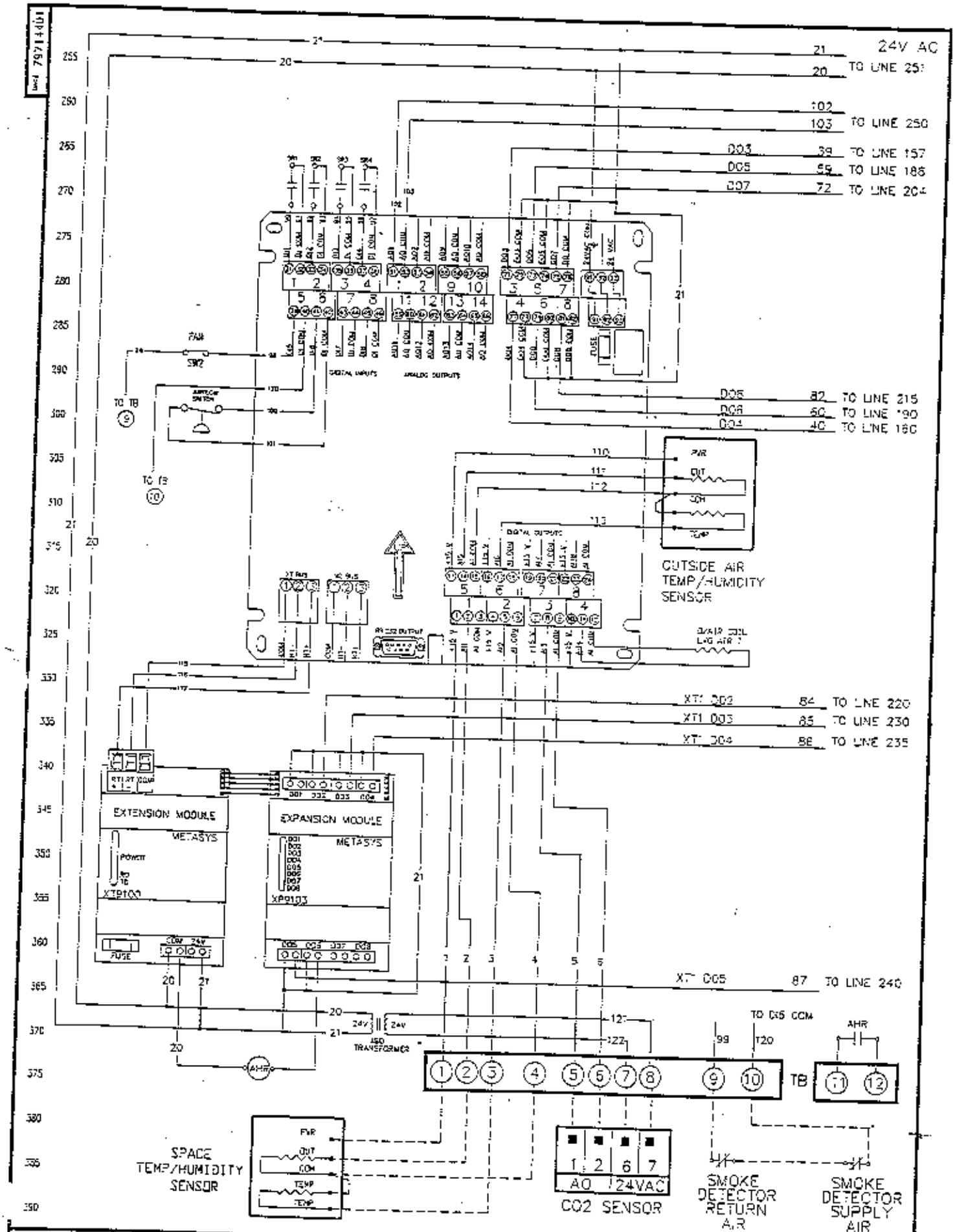

ClimateMaster	MODEL NUMBER CLIMADRY MODEL CD 15/20F STANDARD UNIT WITH 5:10 HP FAN MOTOR	DRAWING # 79714401 11 MAY 97	SHEET # 3 OF 3

CLASS CODE: Z79

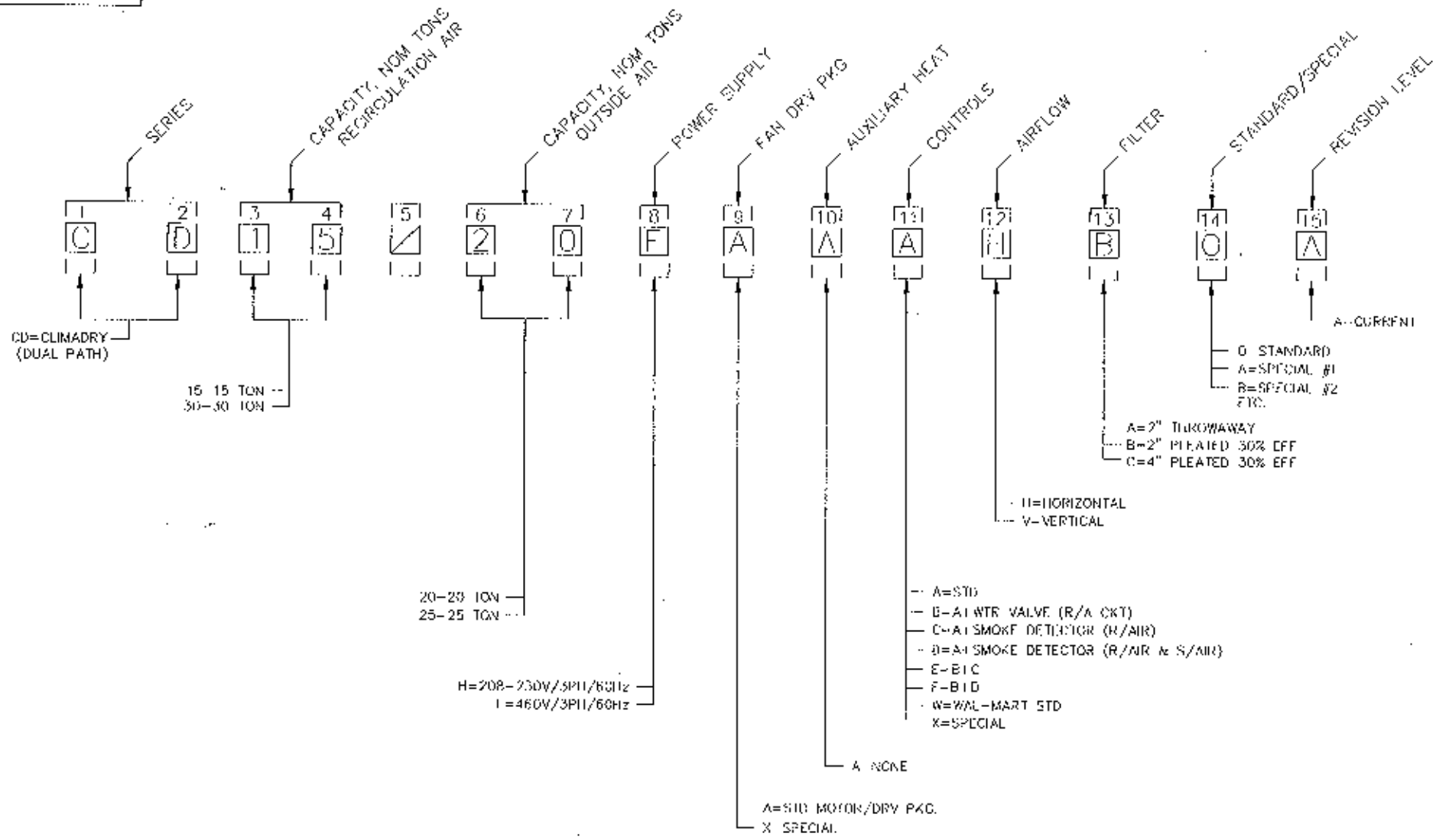

EXAMPLE:
CD15/20FAAAHBOA

REV	DESCRIPTION	BY	CHK	DATE	APPROVED	REV	REMARKS	BY	DATE	APPROVED
						B	CONTROLS REVISED TO CURRENT STATUS	TN	07-0110	05/20/97
						A	CLASS CODE WAS Z40	TN	011392	12/27/96

N/A

CLIMATEMASTER 7300 SW 44th OKC, OK 73179

DECODER
CD SERIES

DRAWN TN DATE 11/19/96 DRAWING NO. 69840B01
CHK NERU DATE SCALE NO. 69840B01
ECO# U11324 DATE 11/19/96 SCALE 800 A SHEET 1

DESIGN CRITERIA CD SERIES

RETURN AIR DESIGN CRITERIA

TOTAL COOLING NOM TONS	AIRFLOW RATED CFM	EVAP AIR CFM	BYPASS CFM	ENT AIR DB F	ENT AIR WB F	WATER IN F	WATER OUT F
15	10000	6000	4000	75	61	85	95
20	10000	8000	2000				
30	10000	10000	0				

OUTSIDE AIR DESIGN CRITERIA

TOTAL COOLING NOM TONS	RATED CFM	ENT AIR DB F	ENT AIR WB F	LVG AIR DB F	WATER IN F	WATER OUT F
20	2500	95	76	45	85	95
25	3100					
30	3700					

EXTERNAL STATIC PRESSURE = 1.0 IWG

STANDARD CONSTRUCTION
FARR 30/30 2" FILTERS TO BE STANDARD
SINGLE SPEED MOTOR
DISCONNECT AND GFI RECEPTACLE
ALL DOORS TO BE DOUBLE WALL

OPTIONS :-
SMOKE DETECTOR -RETURN AIR
SMOKE DETECTOR -SUPPLY AND RETURN AIR

FUTURE OPTIONS :-
ELECTRIC HEAT
HEAT PUMP HEATING OF OUTSIDE AIR

CDELEC.WB2 04-Mar-97

CLIMADRY SERIES ELECTRICAL DATA

MODEL	POWER SUPPLY V/PH/Hz	COMPRESSOR				BLOWER MOTOR		TOTAL FLA	MIN CKT AMPS	MAX. FUSE*
			QTY	RLA	LRA	HP	FLA			
CD15/20H	208-230/3/60	RETURN AIR	2	25	156	7.5	23.8	149.8	159	175
		FRESH AIR LEAD	1	38	222					
		FRESH AIR LAG	1	38	222					
CD15/20F	460-3-60	RETURN AIR	2	12	100	7.5	10.8	69.2	74	80
		FRESH AIR LEAD	1	17.2	95					
		FRESH AIR LAG	1	17.2	95					
CD30/25H	208-230/3/60	RETURN AIR	2	57.2	376	10	28	239.7	255	300
		FRESH AIR LEAD	1	38	222					
		FRESH AIR LAG	1	59.3	320					
CD30/25F	460-3-60	RETURN AIR	2	25.4	142	10	12.8	106.5	113	125
		FRESH AIR LEAD	1	17.2	95					
		FRESH AIR LAG	1	25.7	144					

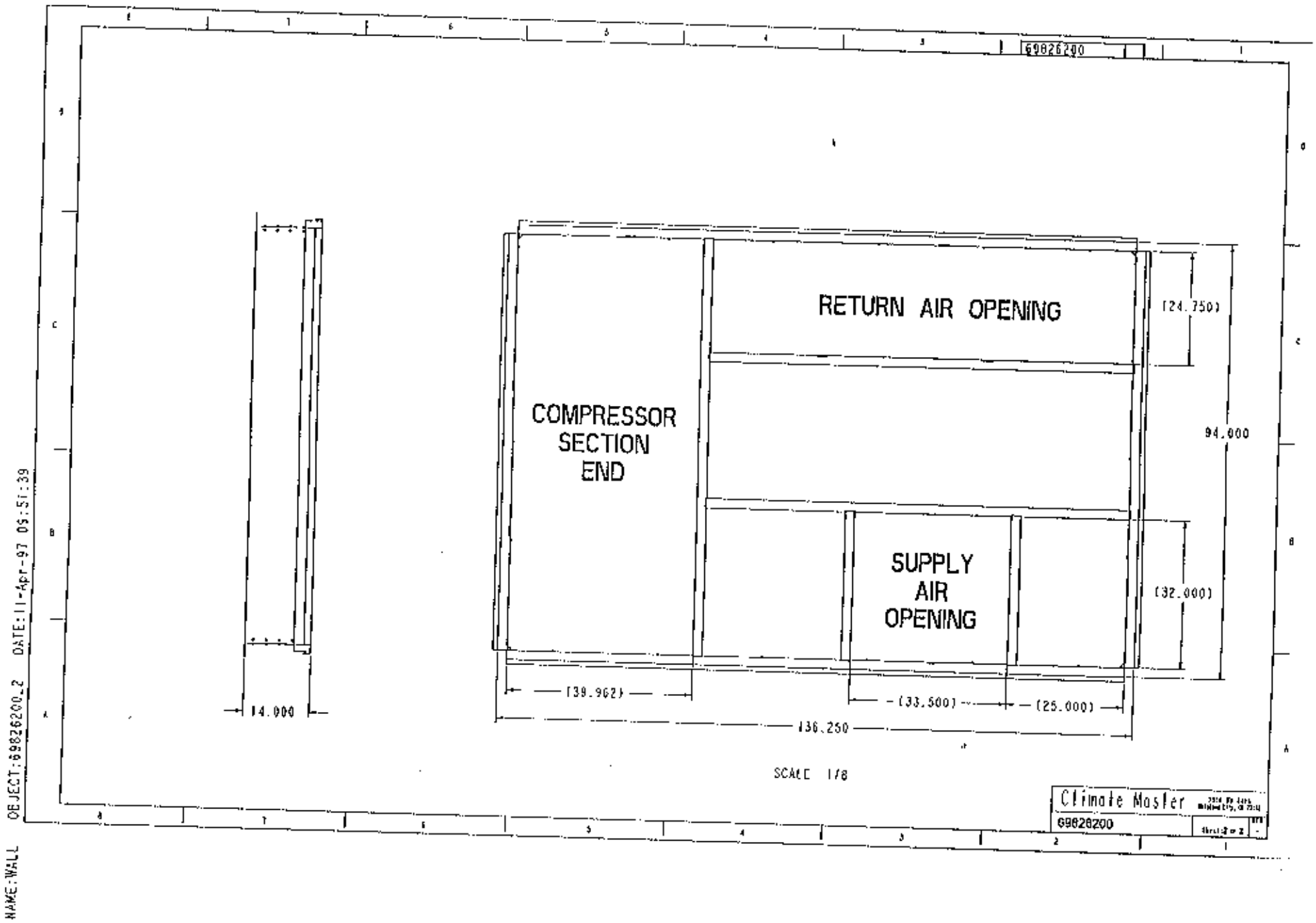

OBJECT:69826200_2 DATE:11-Apr-97 05:51:39

NAME:WALL

ID NUMBER	PART#	DESCRIPTION	TYPE	QTY.
1	2X4_132	2X4 132.25 LONG	PART	2
2	2X4_90	2X4 90 LONG	PART	2
3	69127050	#12-14X5/8SCR SNR#026-D20-26950-959	PART	54
4	69826201	SIDE, ROOF, CURB	PART	2
5	69826202	FRONT/BACK, ROOF CURB	PART	2
6	69826203	SUPPORT, CENTER, ROOF CURB	PART	2
7	69826204	SUPPORT, CENTER, ROOF CURB	PART	1
8	69826205	SUPPORT, CENTER, ROOF CURB	PART	2
9	69826206	ANGLE, ROOF CURB	PART	4

69826200

REV	DESCRIPTION	ECN	DATE
-	INITIAL RELEASE	97-4038	26-Mar-97

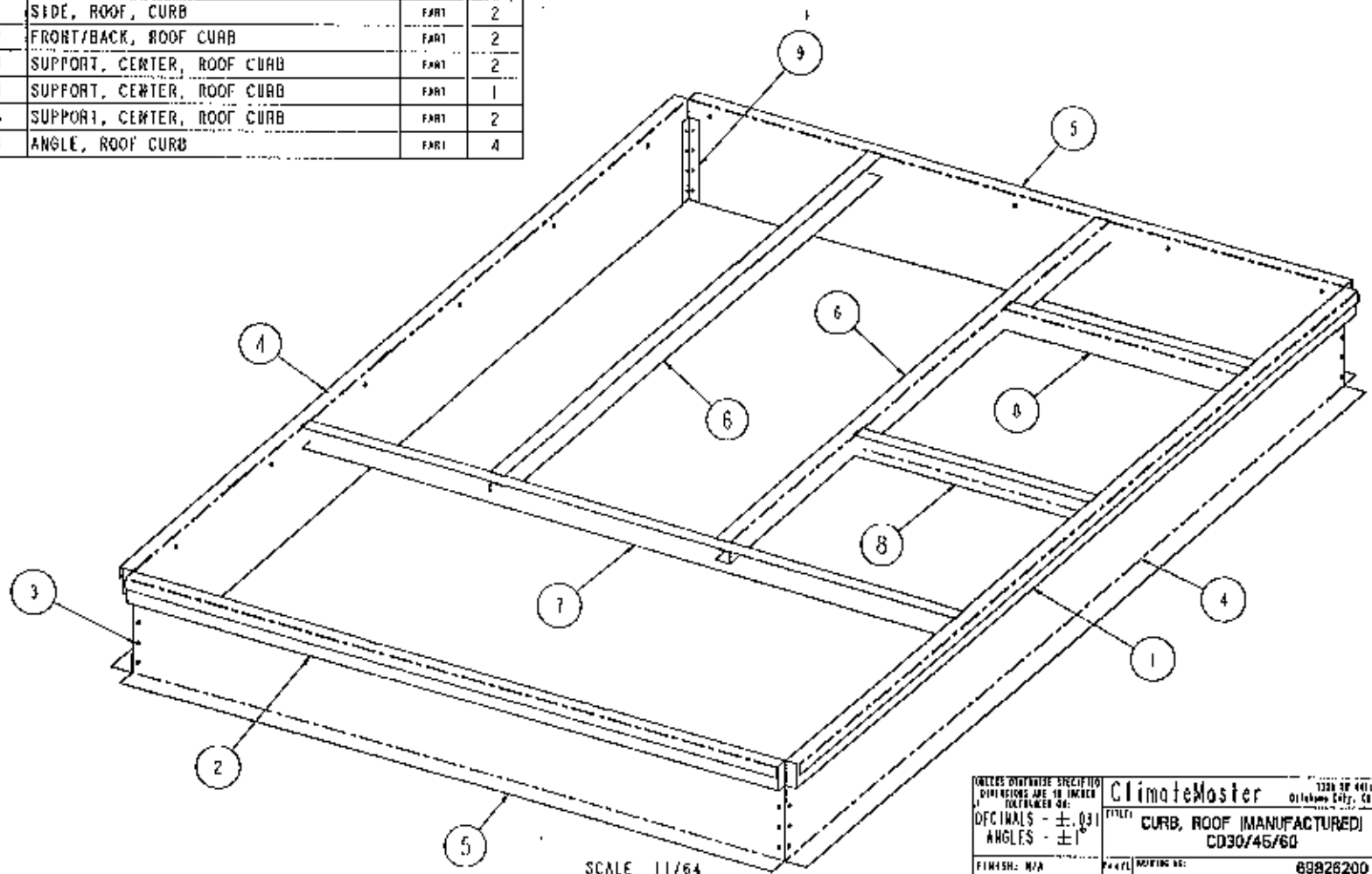

SCALE 1:1/64

UNLESS OTHERWISE SPECIFIED DIMENSIONS ARE IN INCHES TOLERANCES ON: DECIMALS - ±.031 ANGLES - ±1°

FINISH: N/A

MATERIAL: N/A

ClimateMaster

TITLE: CURB, ROOF (MANUFACTURED) CD30/45/60

PART NO: 69826200

SIZE: D

DRAWN: S. WALK

DRAWN: S. SMITH

SCALE: 1/1

Sheet: 1 of 2

REV: -

OBJECT:69826200_1 DATE:11-Apr-97 09:51:17

NAME:WALK

69773700

"VERTICAL" UNITS

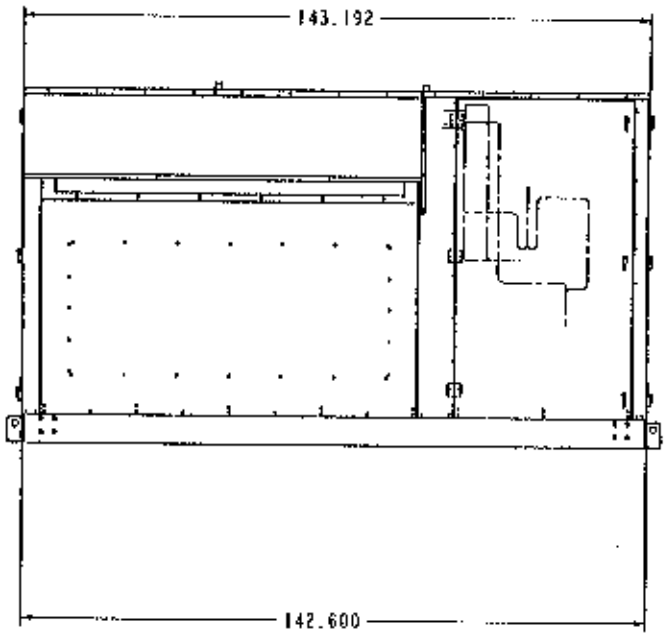

LEFT SIDE VIEW

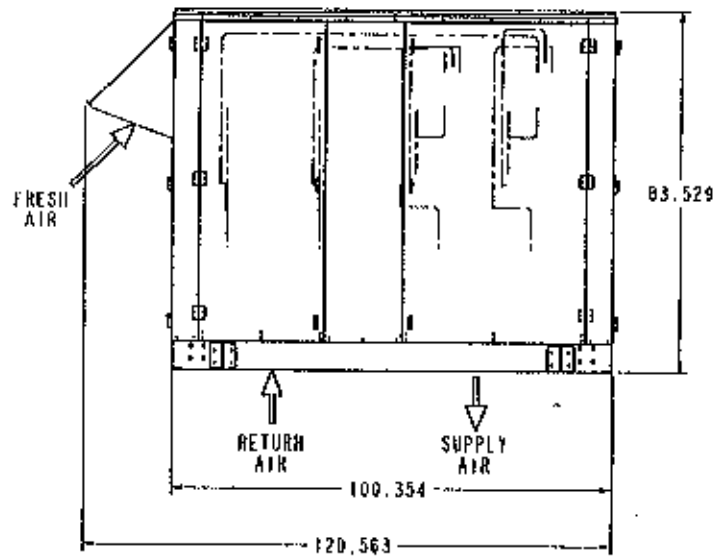

FRONT VIEW

WATER IN/OUT CONN.

MODEL	RET. AIR CIRCUIT	FRESH AIR CIRCUIT
CD15/20	2" FPT	2" FPT
CD30/25	2" FPT	2" FPT

Climate Master

69773700

Sheet 2 of 10

OBJECT:69773700.2 DATE:20-Jan-97 14:46:23

NAME:WALL

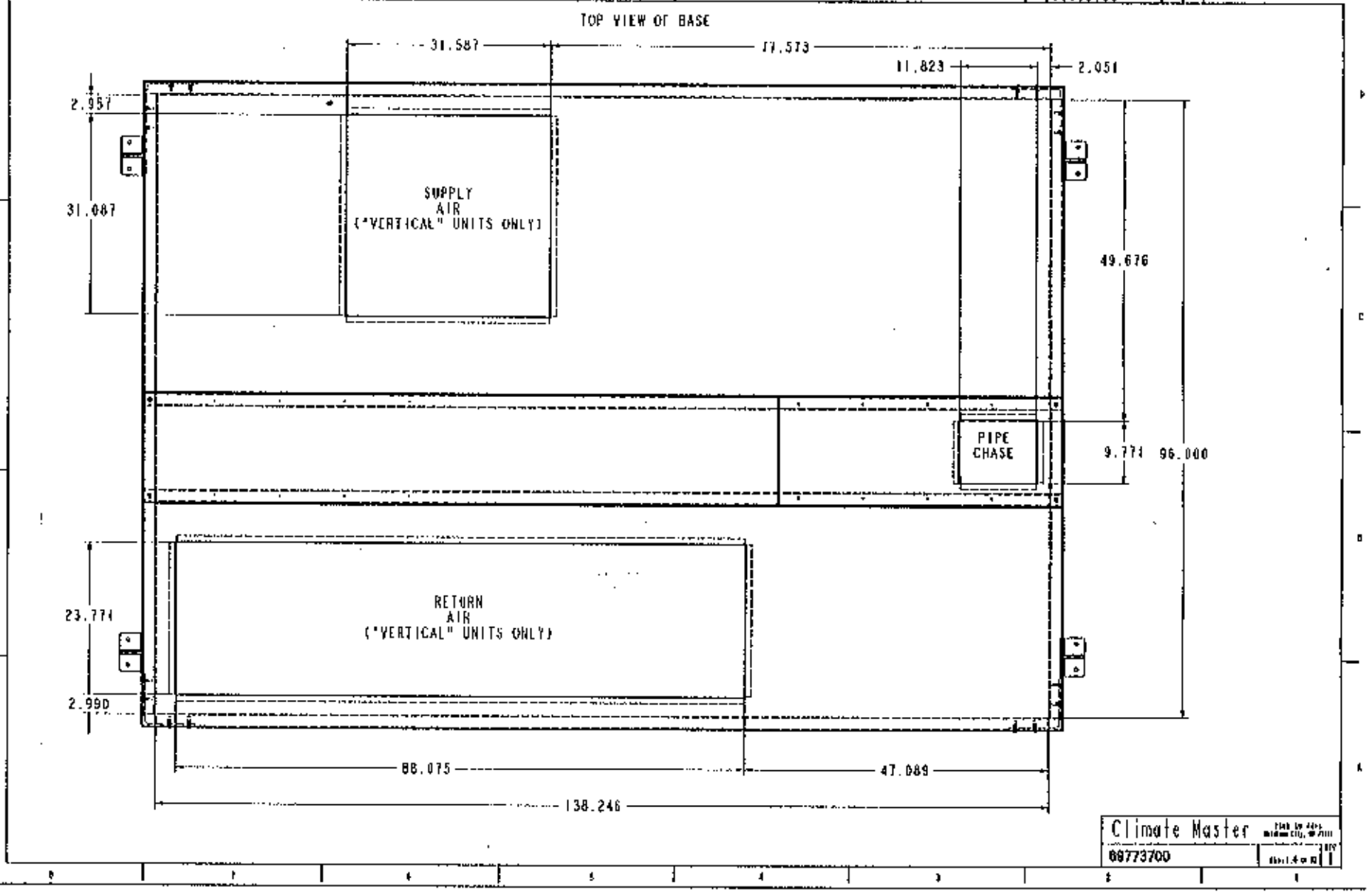

OBJECT:69773700_4 DATE:20-Jan-97 15:04:19

NAME:WALL