ARI GROUND WATER-SOURCE HEAT PUMP CERTIFICATION DATA SHEET
(PRIVATE BRAND MANUFACTURER)

Sheet 1 of 1

MANUFACTURER ClimateMaster Inc. ARI 325 25° EWT

TRADE OR BRAND NAME Geo-Thermal

IGINAL EQ

DATE 4/12/90

Type of Unit(1)	Private Brand Company Model Number(s)		ARI STANDARD RATINGS(2)							
			High Temperature Cooling 70° / Low Temperature Cooling 50°				High Temperature Heating 70° / Low Temperature Heating 50°			
			Capacity (Btuh)	EER (Btuh/Watt)	Water Flow Rate (gpm)	Water Pressure Drop(psi)	Capacity (Btuh)	COP	Water Flow Rate (gpm)	Water Pressure Drop(psi)
IRCU-GW-CB	846-020GCE/ 846-020GAE	70°	19.5	10.8	3.0		23.4	3.5	3.0	
		50°	22.0	13.8	3.0		17.9	3.0	3.0	
IRCU-GW-CB	846-030GCE/ 846-030GAE	70°	28.4	12.0	5.0		34.0	3.4	5.0	
		50°	31.0	15.0	5.0		23.2	3.0	5.0	
IRCU-GW-CB	846-040GCE/ 846040GAE	70°	35.4	11.0	6.5		41.0	3.4	5.0	
		50°	38.5	13.3	6.5		30.8	3.0	5.0	
IRCU-GW-CB	846-050GCE/ 846-050GAE	70°	45.0	11.3	8.0		47.0	3.4	5.0	
		50°	50.0	14.2	8.0		36.0	3.0	5.0	
IRCU-GW-CB	846-060GCE 846-060GAE	70°	54.0	11.0	9.5		64.0	3.3	9.5	
		50°	59.0	14.0	9.5		50.0	3.0	9.5	
IRCU-GW-CB	846-070GCE/ 846-070GAE	70°	64.0	10.2	12.0		76.0	3.3	12.0	
		50°	71.0	12.4	12.0		60.0	3.0	12.0	
IRCU-GW-CB	846-090GCE 1, 3,4/ 846-090GAE 1, 3,4		84.0	10.0	15.0		103.0	3.4	10.0	
			89.0	11.7	15.0		77.0	3.0	10.0	

I certify that the models listed above meet all the requirements of ARI Standard 325-81.

SIGNED Ray E Klassen TITLE Mgr. W.S.H.P. Prod. Eng.

4/83 (OVER) FORM GHI-PBS1

SPLIT SYSTEM

RESIDENTIAL • COMMERCIAL

WATER SOURCE HEAT PUMP UNITS

AIR HANDLING UNITS are available in several configurations: The Vertical model as shown, the Horizontal models or the counterflow configuration with the blower mounted for bottom air discharge.

The CLIMATE MASTER Split System differs from our standard Geo Thermal Units in that it consists of two remotely installed sections. The Split System offers the freedom and convenience of design allowing centralized air distribution while remotely locating the condensing section.

THE CONDENSING SECTION does not have to be located outdoors. Since the System is water cooled and does not require a large volume of air, the condensing section may be located in the garage, utility room, equipment room, or any area convenient for maintenance.

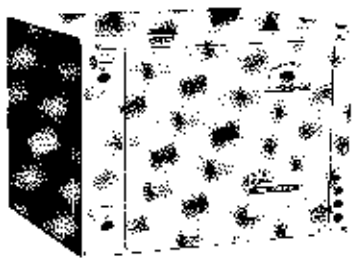

PERFORMANCE DATA

	COOLING ENTERING WATER TEMPERATURES						HEATING ENTERING WATER TEMPERATURES					
	65°F		75°F		85°F		60°F		70°F		80°F	
MODEL	BTU/HR	EER	BTU/HR	EER	BTU/HR	EER	BTU/HR	COP	BTU/HR	COP	BTU/HR	COP
846-015	15,100	13.5	14,700	12.2	14,000	10.8	16,700	3.7	19,000	3.9	20,100	4.0
846-019	19,900	13.8	19,400	12.4	18,500	11.0	21,100	3.8	24,000	4.0	25,400	4.1
846-023	24,200	15.4	23,600	13.9	22,500	12.3	24,500	4.0	27,800	4.2	29,500	4.3
846-027	27,500	14.6	26,800	13.2	25,600	11.7	29,400	3.8	33,400	4.0	35,400	4.1
846-034	35,000	14.6	34,200	13.2	32,600	11.7	37,800	3.8	43,000	4.0	45,600	4.1
846-042	44,600	13.8	43,500	12.4	41,500	11.0	44,900	3.7	51,000	3.9	54,100	4.0
846-052	51,600	13.5	50,300	12.2	48,000	10.8	56,300	3.7	64,000	3.9	67,800	4.0
846-062	64,500	13.4	62,900	12.1	60,000	10.7	70,400	3.5	80,000	3.7	84,800	3.8
846-080	81,700	12.5	79,600	11.3	76,000	10.0	98,600	3.9	112,000	4.1	118,700	4.2

Note: For entering water temperatures below 55°F consult factory.

COOLING CAPACITY DATA: Based on A.R.I. Conditions of 80° D.B. and 67° W.B. Entering Air. The A.R.I. certified capacities are with 85° E.W.T. and 95° L.W.T.

EER. = ENERGY EFFICIENCY RATIO: The Total Cooling Capacity divided by the Total Watts Electrical input.

HEATING CAPACITY DATA: Based on A.R.I. Conditions of 70°F Entering Air. The A.R.I. Certified Capacities are same air, with 70°F Entering Water Temperature, same flow as the Cooling Cycle.

COP = COEFFICIENT OF PERFORMANCE. A COP of 1 equals 3412 BTU/HR with an Electrical input of one Kilowatt. Therefore, COP listed is calculated by dividing the total heating capacity by the electrical input divided by 3412.

GeoThermal Heat Pumps

ClimateMaster

7300 S.W. 44 ST. • OKLAHOMA CITY, OK. 73179

SPLIT SYSTEM

RESIDENTIAL • COMMERCIAL

WATER SOURCE HEAT PUMP UNITS

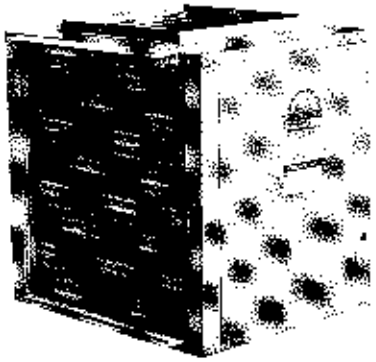

AIR HANDLING UNITS are available in several configurations: The Vertical model as shown, the Horizontal models or the counterflow configuration with the blower mounted for bottom air discharge.

The CLIMATE MASTER Split System differs from our standard Geo Thermal Units in that it consists of two remotely installed sections. The Split System offers the freedom and convenience of design allowing centralized air distribution while remotely locating the condensing section.

THE CONDENSING SECTION does not have to be located outdoors. Since the System is water cooled and does not require a large volume of air, the condensing section may be located in the garage, utility room, equipment room, or any area convenient for maintenance.

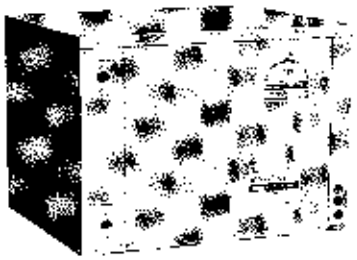

PERFORMANCE DATA

	COOLING ENTERING WATER TEMPERATURES						HEATING ENTERING WATER TEMPERATURES					
	65°F		75°F		85°F		60°F		70°F		80°F	
MODEL	BTU/HR	EER	BTU/HR	EER	BTU/HR	EER	BTU/HR	COP	BTU/HR	COP	BTU/HR	COP
846-015	15,100	13.5	14,700	12.2	14,000	10.8	16,700	3.7	19,000	3.9	20,100	4.0
846-019	19,900	13.8	19,400	12.4	18,500	11.0	21,100	3.8	24,000	4.0	25,400	4.1
846-023	24,200	15.4	23,600	13.9	22,500	12.3	24,500	4.0	27,800	4.2	29,500	4.3
846-027	27,500	14.6	26,800	13.2	25,600	11.7	29,400	3.8	33,400	4.0	35,400	4.1
846-034	35,000	14.6	34,200	13.2	32,600	11.7	37,800	3.8	43,000	4.0	45,600	4.1
846-042	44,600	13.8	43,500	12.4	41,500	11.0	44,900	3.7	51,000	3.9	54,100	4.0
846-052	51,600	13.5	50,300	12.2	48,000	10.8	56,300	3.7	64,000	3.9	67,800	4.0
846-062	64,500	13.4	62,900	12.1	60,000	10.7	70,400	3.5	80,000	3.7	84,800	3.8
846-080	81,700	12.5	79,600	11.3	76,000	10.0	98,600	3.9	112,000	4.1	118,700	4.2

Note: For entering water temperatures below 55°F consult factory.

COOLING CAPACITY DATA: Based on A.R.I. Conditions of 80° D.B. and 67° W.B. Entering Air. The A.R.I. certified capacities are with 85° E.W.T. and 95° L.W.T.

EER = ENERGY EFFICIENCY RATIO: The Total Cooling Capacity divided by the Total Watts Electrical input.

HEATING CAPACITY DATA: Based on A.R.I. Conditions of 70°F Entering Air. The A.R.I. Certified Capacities are same air, with 70°F Entering Water Temperature, same flow as the Cooling Cycle.

COP = COEFFICIENT OF PERFORMANCE. A COP of 1 equals 3412 BTU/HR with an Electrical input of one Kilowatt. Therefore, COP listed is calculated by dividing the total heating capacity by the electrical input divided by 3412.

Geo-Thermal Heat Pumps
ClimateMaster

7300 S.W. 44 ST. • OKLAHOMA CITY, OK. 73179

"846" Heating Performance

for fluid entering temperatures below 45° F (7.2°C).

MODEL	ENTERING WATER (1) TEMP., °F	FLOW RATE GPM	HEATING PERFORMANCE (2)			SCFM
			BTUH	WATTS	COP	
846-020	25	5.0	11500	1330	2.5	650
	30		13000	1370	2.8	
	35		14500	1415	3.0	
	38		15200	1440	3.1	
	41		16000	1470	3.2	
	44		17200	1485	3.4	
846-030	25	7.0	16700	1890	2.5	950
	30		18100	1950	2.7	
	35		20100	2010	2.9	
	38		21100	2040	3.0	
	41		22200	2080	3.2	
	44		23600	2110	3.3	
846-040	25	8.0	19800	2380	2.4	1200
	30		22700	2480	2.7	
	35		25500	2580	2.9	
	38		27200	2640	3.0	
	41		28900	2700	3.1	
	44		30600	2770	3.2	
846-050	25	11.0	23700	2755	2.5	1500
	30		27000	2900	2.7	
	35		30000	3020	2.9	
	38		32000	3100	3.0	
	41		33800	3170	3.1	
	44		35800	3230	3.2	
846-060	25	13.0	32500	3550	2.7	1700
	30		36000	3680	2.9	
	35		39900	3830	3.1	
	38		42000	3890	3.1	
	41		44300	4010	3.2	
	44		46500	4100	3.3	
846-070	25	16.0	36500	4540	2.4	2000
	30		41000	4690	2.6	
	35		46500	4850	2.8	
	38		48000	4940	2.8	
	41		51000	5030	3.0	
	44		53500	5140	3.1	
846-090	25	20.0	51000	6070	2.4	3000
	30		57000	6350	2.6	
	35		64000	6700	2.8	
	38		66500	6720	2.9	
	41		70400	6880	3.0	
	44		74000	6990	3.1	

NOTES:

(1) Minimum entering temperature with plain fresh water is 40° F (4.5° C). Below 40° F (4.5° C) entering temperature, ratings are based on the use of a solution of 15% Methanol and 85% water by weight.

(2) Ratings are based on the heat source fluid flow rate and indoor SCFM as shown, with air entering the indoor coil at 70° F (21.1° C).

All ratings and specifications are subject to change without notice.

7300 S.W. 44th STREET • OAKLAHOMA CITY, OK. 73179

"846" Cooling Performance Ratings
E.W.T 70° F thru 100° F

MODEL	EWT °F (2)	FLOW RATE GPM	COOLING (1)			SCFM
			BTU/HR.	WATTS	EER	
846-020	100	5	16900	1920	8.8	650
	90		18000	1820	9.9	
	80		19700	1720	11.5	
	70		20400	1620	12.6	
846-030	100	7	23300	2283	10.2	950
	90		25000	2164	11.6	
	80		26700	2044	13.1	
	70		28300	1925	14.7	
846-040	100	8	30600	3220	9.5	1200
	90		32800	3040	13.8	
	80		35000	2870	12.2	
	70		37200	2715	13.7	
846-050	100	11	37000	3960	9.3	1500
	90		39700	3750	10.6	
	80		42400	3560	11.9	
	70		45000	3350	13.4	
846-060	100	13	46800	4680	10.0	1700
	90		50100	4430	11.3	
	80		53500	4190	12.8	
	70		56800	3945	14.4	
846-070	100	16	54300	6240	8.7	2000
	90		58200	5860	9.9	
	80		62200	5600	11.1	
	70		66300	5280	12.5	
846-090	100	20	73700	8700	8.5	3000
	90		78400	8200	9.6	
	80		83400	7700	10.8	
	70		88740	7300	12.1	

NOTES:

(1) For earth coupled application, these ratings are based on the loop fluid being a solution of 15% methanol and 85% water by weight, with the flow rate as shown.

(2) Ratings are also based on air entering the indoor coil at 80° F db (26.7° C) and 67° F wb (19.4° C), at rated SCFM as shown above.

All ratings and specifications are subject to change without notice.

7300 S.W. 44th STREET • OAKLAHOMA CITY, OK. 73179

Geo-Thermal Heat Pumps

ClimateMaster

start-up and maintenance manual

SUPPLEMENT FOR SPLIT SYSTEMS — CONDENSING SECTION WITH MATCHING AIR HANDLER

The **condensing section** should be mounted on a cement slab or similar support to provide a good base and some degree of levelness. It is designed for outdoor installation, however, where ambient temperatures can fall below freezing, we recommend the unit be installed in a heated area to prevent possible condenser freeze-up and to optimize the overall system performance.

The **air handler** should be mounted on isolating pads, and air supply and return ducts should be attached thru canvas connectors to isolate vibration and noise from the building structure. Flexible wiring and conduit should be used for the same reasons.

CAUTION: Holding charge of refrigerant:

Both the condensing section and the air handler section are **factory supplied with a holding charge of refrigerant only.** Using the gauge ports provided, evacuate this holding charge before attempting to cut the sealed refrigerant lines or otherwise open the system.

Interconnecting refrigerant line sizes should be in accordance with table 1 in the following instructions. Copper tubing should be clean and free of moisture and dirt or trash. Suction/discharge line MUST be insulated with at least ⅜" wall, closed cell, foam rubber insulation or the equivalent.

Refrigerant lines generally can and should be routed and supported so as to prevent the transmission of vibrations into the building structure.

After the interconnecting refrigerant lines have been installed, the entire system should be pressurized with R22 and leak checked. Then, using a good vacuum pump, evacuate the system for a minimum of six (6) hours, then charge in accordance with Tables 1 and 2 in the following instructions.

Experience and good design practice dictate 75 feet as the maximum practical length for interconnecting refrigerant lines in split system heat pumps, without special considerations. Beyond 75 feet system losses become considerable, and the total refrigerant charge required can compromise the reliability and design life of the equipment.

Pump-down must never be used with heat pumps.

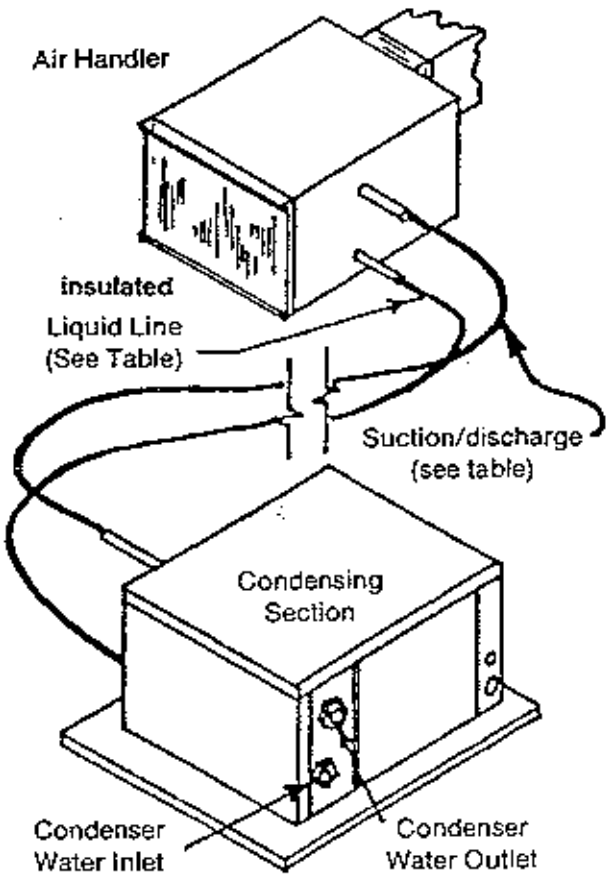

Table 1: Split System Line Sizing and Charging

SYSTEM MODEL	BASIC R 22 CHARGE OZ (NOTE 4)	REFRIGERATION LINE O.D. SIZES FOR EQUIVALENT LENGTHS (NOTE 3)																		SUCTION LINE VERTICAL RISER MAX O.D. (NOTE 5)
		15 FT		25 FT		35 FT		45 FT		50 FT		60 FT		70 FT		80 FT		120 FT MAX		
		LIQ	SUCT	LIQ	SUCT	LIQ	SUCT	LIQ	SUCT	LIQ	SUCT	LIQ	SUCT	LIQ	SUCT	LIQ	SUCT	LIQ	SUCT	
846-015	31	¼	⅝	¼	⅝	¼	¾	5/16	¾	5/16	¾	5/16	¾	5/16	¾	5/16	¾	5/16	¾	⅝
846-019	32	¼	⅝	¼	¾	5/16	¾	5/16	¾	5/16	¾	5/16	¾	5/16	⅞	⅜	⅞	⅜	⅞	⅝
* 846-020	35																			
846-023	39	¼	⅝	5/16	¾	5/16	¾	5/16	¾	5/16	¾	5/16	⅞	⅜	⅞	⅜	⅞	⅜	⅞	¾
846-027	52	5/16	⅝	5/16	¾	5/16	¾	5/16	¾	⅜	¾	⅜	⅞	⅜	⅞	⅜	⅞	⅜	⅞	¾
* 846-030	61																			
846-034	58	5/16	¾	⅜	¾	⅜	¾	⅜	⅞	⅜	⅞	⅜	⅞	⅜	⅞	½	⅞	½	⅞	⅞
* 846-040	59																			
846-042	69	⅜	¾	⅜	⅞	⅜	⅞	⅜	⅞	⅜	⅞	⅜	⅞	½	1⅛	½	1⅛	½	1⅛	⅞
* 846-050	82																			
846-052	94	⅜	⅞	⅜	⅞	⅜	⅞	⅜	1⅛	½	1⅛	½	1⅛	½	1⅛	½	1⅛	½	1⅛	⅞
* 846-060	94																			
846-062	99	⅜	⅞	⅜	1⅛	½	1⅛	½	1⅛	½	1⅛	½	1⅛	½	1⅛	½	1⅛	½	1⅛	1⅛
* 846-070	105																			
846-080	134	½	1⅛	½	1⅛	½	1⅛	½	1⅛	½	1⅛	½	1⅛	½	1⅜	⅝	1⅜	⅝	1⅜	1⅛
* 846-090	134																			
846-100	152	½	1⅛	½	1⅜	½	1⅜	½	1⅜	½	1⅜	½	1⅜	⅝	1⅝	⅝	1⅝	⅝	1⅝	1⅜
846-120	194	½	1⅛	½	1⅜	½	1⅜	½	1⅜	⅝	1⅝	⅝	1⅝	⅝	1⅝	⅝	1⅝	⅝	1⅝	1⅜

* LOW TEMP MODELS

Table 2: Liquid Line Charge per Linear Foot.

	Liquid line size, O.D.				
	¼	5/16	⅜	½	⅝
R22 oz. per foot	.25	.44	.60	1.15	1.95

Example: Model 846-030 with 35 feet of 5/16" o.d. liquid line.
Total system charge = Basic charge + .44 oz. per foot
Total system charge = 61 oz. + (.44 x 35 ft.) = 76.4 oz.

Notes:

1. Maximum linear (actual) liquid line lengths **without a suction line accumulator** installed are:

   Model sizes 15 thru 60 = **60 feet**
   Model sizes 62 thru 90 = **50 feet**

   Maximum linear line lengths with suction accumulator installed are **100 feet**, all models.

2. Liquid and suction line sizes (diameter) are basd on EQUIVALENT LINE LENGTHS. When the computed equivalent length falls between values in table 1, use size given for next longer length.

3. Refrigerant line charge is based on **LINEAR LINE LENGTH**. Total system refrigerant charge is **BASIC CHARGE** plus **LINE CHARGE**. Refer to table 2 for example.

4. These line sizes are required for vertical suction/hot gas lines, whether or not the air handler is above or below the compressor, to maintain adequate gas velocity for oil entrainment.

5. Horizontal suction/hot gas line sizes must not exceed the largest diameter given in table 1 for a given heat pump.

SPLIT SYSTEM REFRIGERANT LINE SIZING & CHARGING

PREFACE:

To minimize system performance, efficiency, and reliability, and to minimize installation costs, it is always in the best interest of the consumer to keep refrigerant lines as short as possible. Every effort should be made to locate the condensing (outdoor) section and the air handler (indoor) section of the system as close as possible to each other.

GENERAL INFORMATION:

1. Pressure drop (friction losses) in refrigerant suction and hot gas lines reduces system capacity and increases power consumption as much as 10 percent or more, depending on length of lines, number of bends, etc. Pressure drop in liquid lines affects performance to a lesser degree, provided that a solid column of liquid (no flash gas) is being delivered to the expansion device, and that the liquid pressure at the expansion device is sufficient to produce the required refrigerant flow.
2. Oil is continually being circulated with the refrigerant and, so, oil return to the compressor is always a consideration in line sizing. Suction lines on split system heat pumps are also hot gas lines in the heating mode, but are treated as suction lines for sizing purposes. If the recommended suction line sizes are used, there should be no problem with oil return.
3. Vertical lines should be kept to a minimum. Vertical liquid lines will have a vertical liquid lift in either cooling or heating, and the weight of the liquid head is added to the friction loss to arrive at the total liquid line pressure drop.

LINEAR VS. EQUIVALENT LINE LENGTH:

1. **Linear length** of a line is the actual measured length, including bends. The **linear length of the liquid line is used to compute the additional refrigerant charge** that must be added to the basic charge to determine the total charge for a given system (refer to table 2).
2. **Equivalent length** is the combined total of (1), the actual lengths of all straight runs and (2), the equivalent lengths of all elbows, valves, and fittings in a particular line. Equivalent valve or fitting length is equal to the length of a straight pipe or tubing of the same size having the same pressure drop as a particular valve or fitting. The **ASHRAE Fundamentals Handbook**, Chapter 34, provides tables for determining losses in equivalent feet of pipe or tubing for various valves and fittings.
   Liquid and suction line sizes are based on equivalent lengths, as given in Table 1.

THINGS TO REMEMBER:

1. **Do not overcharge a system.** Charge all systems by weight as determined from the total of the BASIC CHARGE (table 1) and the LIQUID LINE CHARGE (table 2).
2. **Do not oversize liquid lines** unless absolutely unavoidable. If oversized lines must be used, a suction line accumulator may be required, and the addition of a crankcase heater may be necessary on some models, depending upon the total system charge. **Consult factory for recommendation.**
3. **Suction line size** must be one of those given in Table 1. Horizontal suction runs should be pitched slightly toward the compressor to provide free drainage and aid oil return.
4. If a liquid line drier-filter is required, it must be of the **bi-directional type only.**
5. **Linear line lengths** in excess of 100 feet are not recommended, either with or without a suction line accumulator.

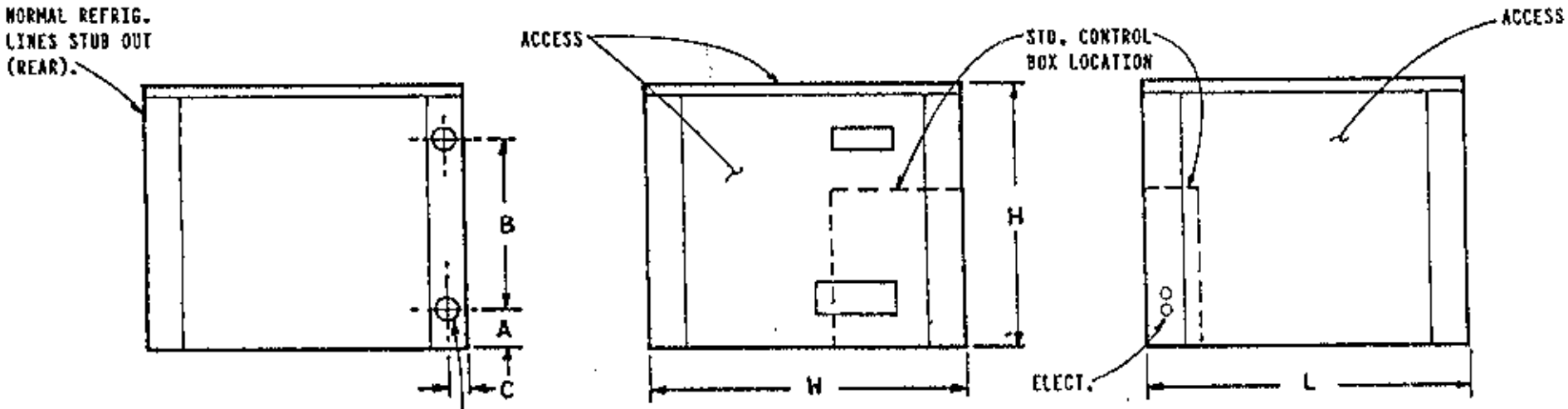

LEFT SIDE

C/W CONNECT SIZES

15 THRU	42 = 3/4"FPT
20 THRU	50 = 3/4"FPT
52 THRU	62 = 1"FPT
60 THRU	70 = 1"FPT

FRONT VIEW

* CONNECT SIZES ONLY
NOT REQ'D LINE SIZES
(REFER LINE SIZE DATA)

RIGHT SIDE

NOTE: C/S ALSO AVAILABLE
BOTTOM ACCESS FOR ELEC.
AND C/W CONNECTS.

SPECIFICATIONS SUBJECT TO CHANGE WITHOUT NOTICE

MODEL	CABINET			C/W PIPING			* REFRIGERANT	
	H	W	L	A	B	C	LIQ	SUC
015	13 1/2	21 3/4	21 3/4	2 1/4	8 1/2	1 1/16	3/8	1/2
019,020	17 1/4	21 3/4	21 3/4	2 1/4	11	1 1/16	3/8	1/2
023	19 1/4	21 3/4	21 3/4	2 1/4	10	1 1/16	3/8	5/8
027,030	19 1/4	21 3/4	21 3/4	2 1/4	10	1 1/16	3/8	5/8
	19 1/4	21 3/4	21 3/4	N/A	N/A	N/A	3/8	5/8
034,042,040,050	19 1/4	26 1/8	21 3/4	2 1/4	12 1/4	1 1/16	1/2	3/4
052,062,060,070	21 1/4	32 3/4	24 5/8	2 1/4	*	1 1/8	1/2	7/8

* 052 & 060 : 16 1/4 062 & 070 : 13 7/8

ClimateMaster

SPLIT SYSTEM
CONDENS'G SECTION
846

DWN BY	DATE	
HWN	3-14-90	CM230C

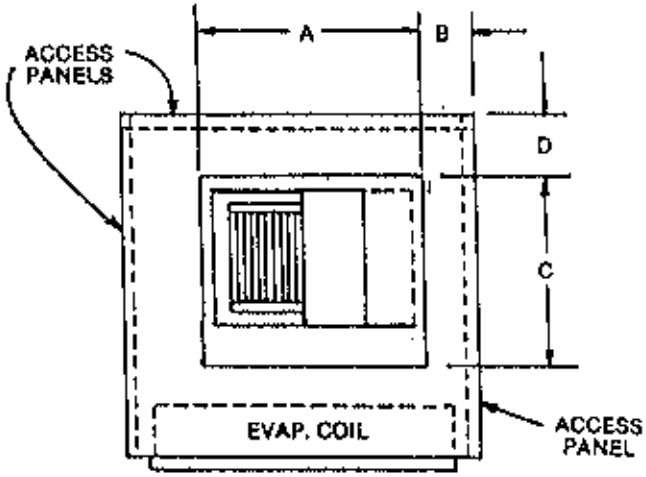

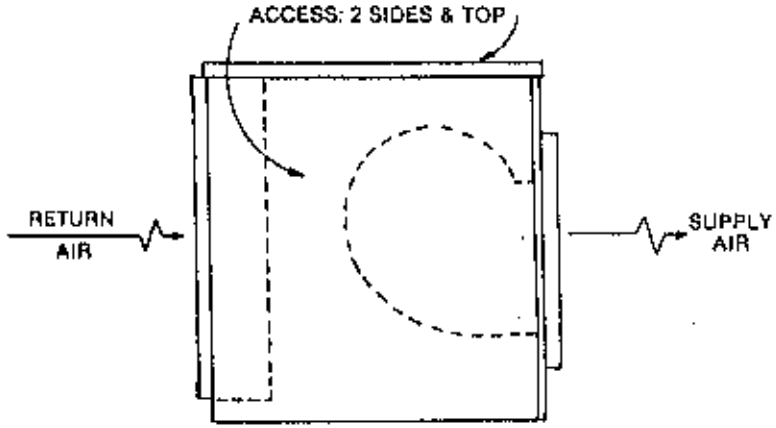

ALTERNATE BLOWER ARRANGEMENT

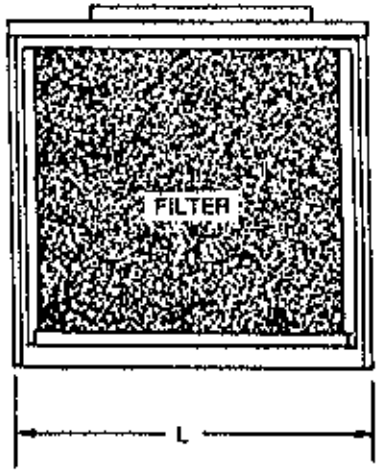

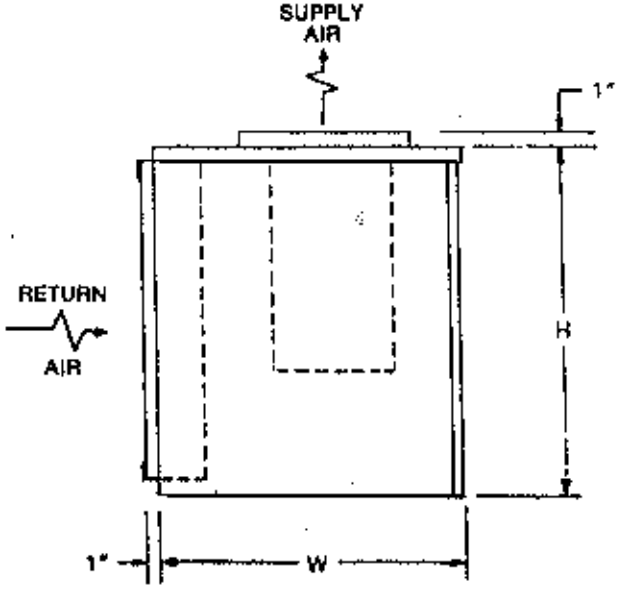

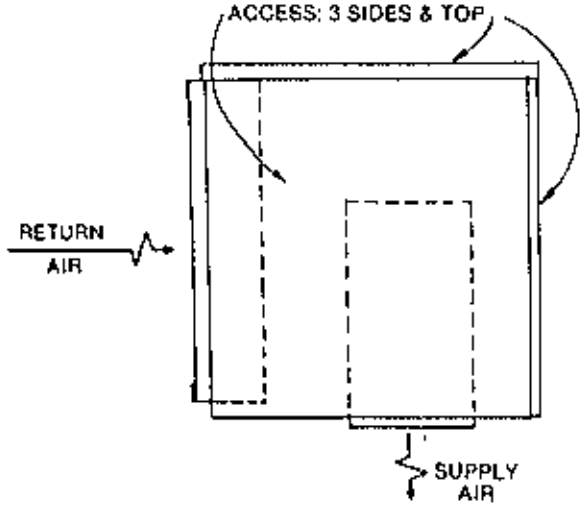

ALTERNATE BLOWER ARRANGEMENT

DIMENSIONS, INCHES

MODEL	L	W	H	A	B	C	D
027,030	21¼	20⅝	22¼	16	2½	14	2½
034,042 040,050	27½	21¼	26½	18	3½	16	2½
052,062 060,070	32	24¾	25¾	20	6	18	2½

846 AIR HANDLER

ClimateMaster

DAE CM231B

DATE: 3 - 14 - 90

DWN BY: HWN

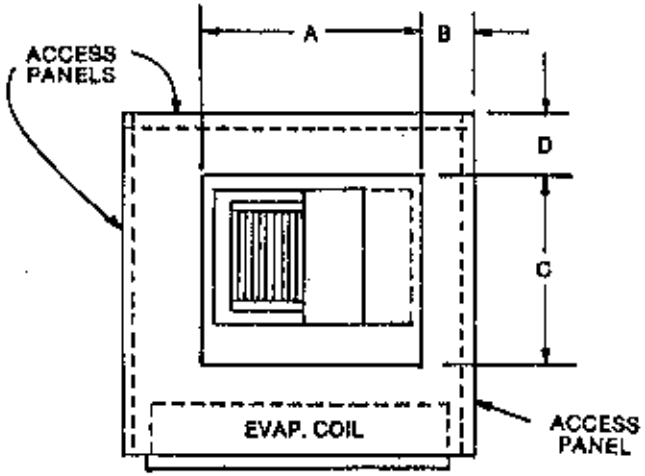

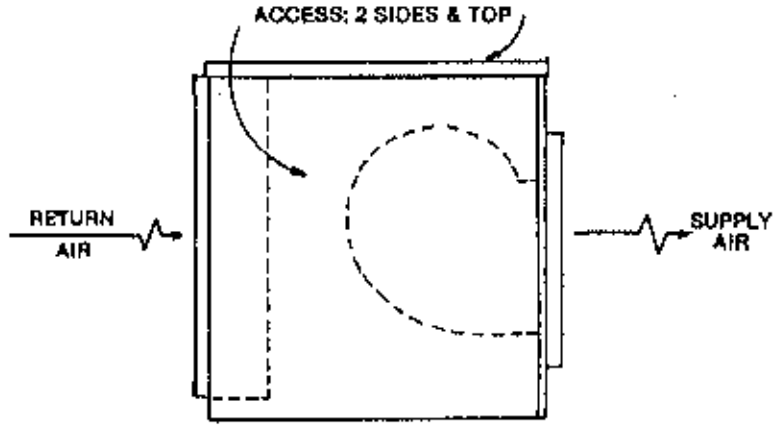

ALTERNATE BLOWER ARRANGEMENT

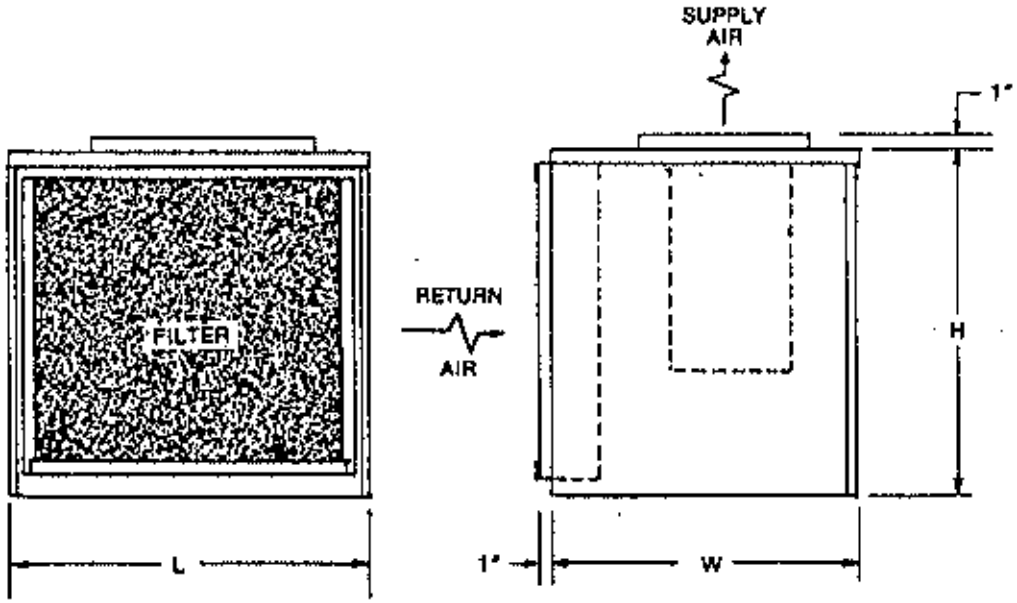

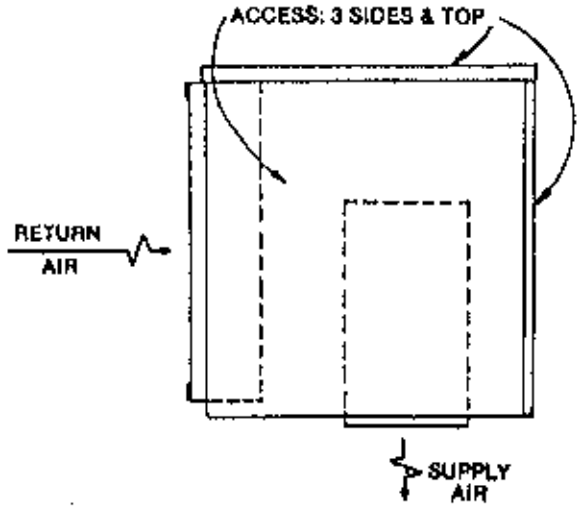

ALTERNATE BLOWER ARRANGEMENT

DIMENSIONS, INCHES

MODEL	L	W	H	A	B	C	D
016	21¾	21¾	13	10	7¾	11⅞	4
019 020	21¾	21¾	17	14	5¾	11⅞	2½
023	21¾	21¾	19	14	6¼	11¾	3

846 AIR HANDLER

ClimateMaster

DAE. CM232A

DATE: 3 – 14 – 90

DWN BY. HWN

NOTE: BLOWER PROTRUSION IS NOT TO BE USED FOR A DUCT CONNECTION

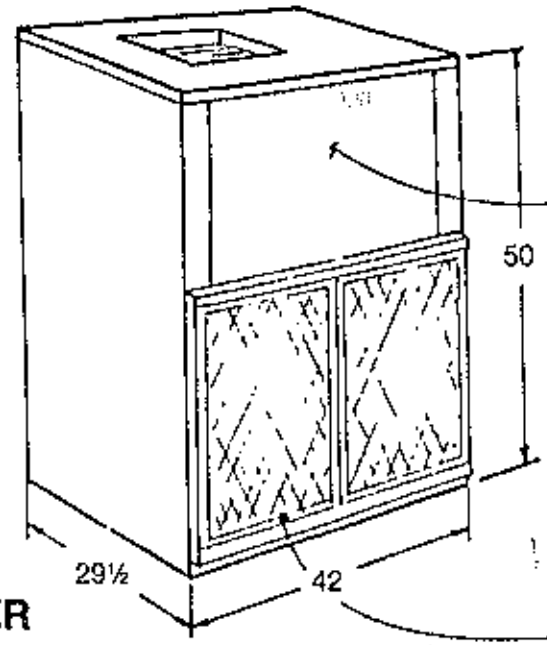

VERTICAL AIR HANDLER

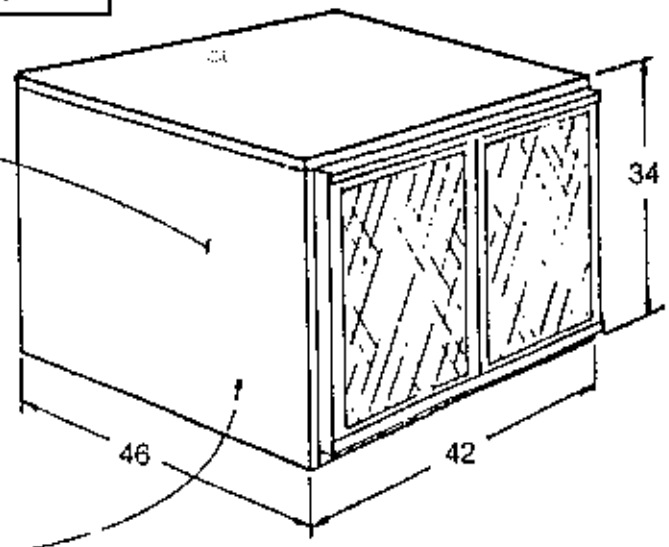

HORIZONTAL AIR HANDLER

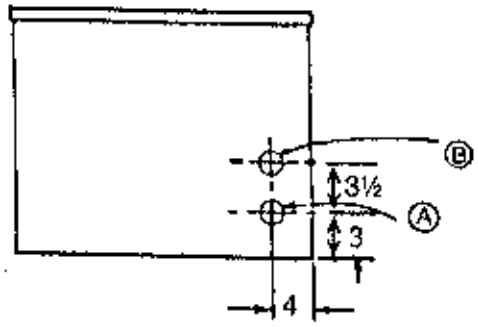

LEFT SIDE

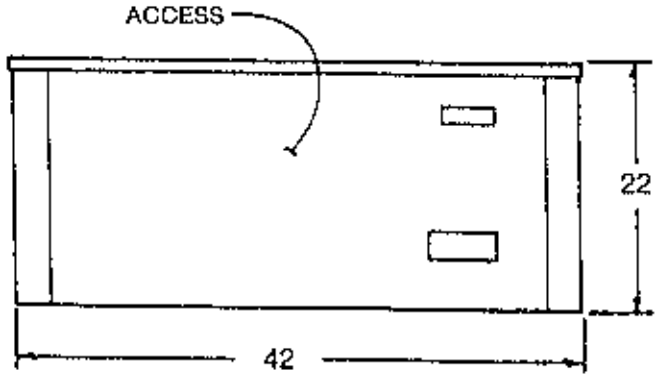

FRONT

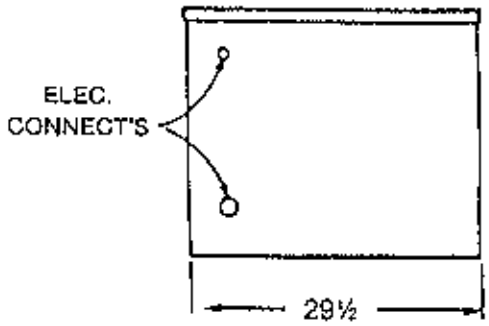

RIGHT SIDE

PIPING CONNECTIONS

Ⓐ Condenser water IN:	Models 080 & 100 = 1 F.P.T.	
	Model 120 = 1¼ F.P.T.	
Ⓑ Condenser water OUT:	Models 080 & 100 = 1 F.P.T.	
	Model 120 = 1¼ F.P.T.	
Ⓒ Condensate Drain:	1 F.P.T. (all 3 models)	

ELECTRICAL

- ☐ 208-230/1/60 (080 Only)
- ☐ 208-230/3/60
- ☐ 460/3/60

GeoThermal Heat Pumps ClimateMaster

846–080,100,120

REF: 3 – 14 – 90

DAE D-201A

NOTE: BLOWER PROTRUSION IS NOT TO BE USED FOR A DUCT CONNECTION

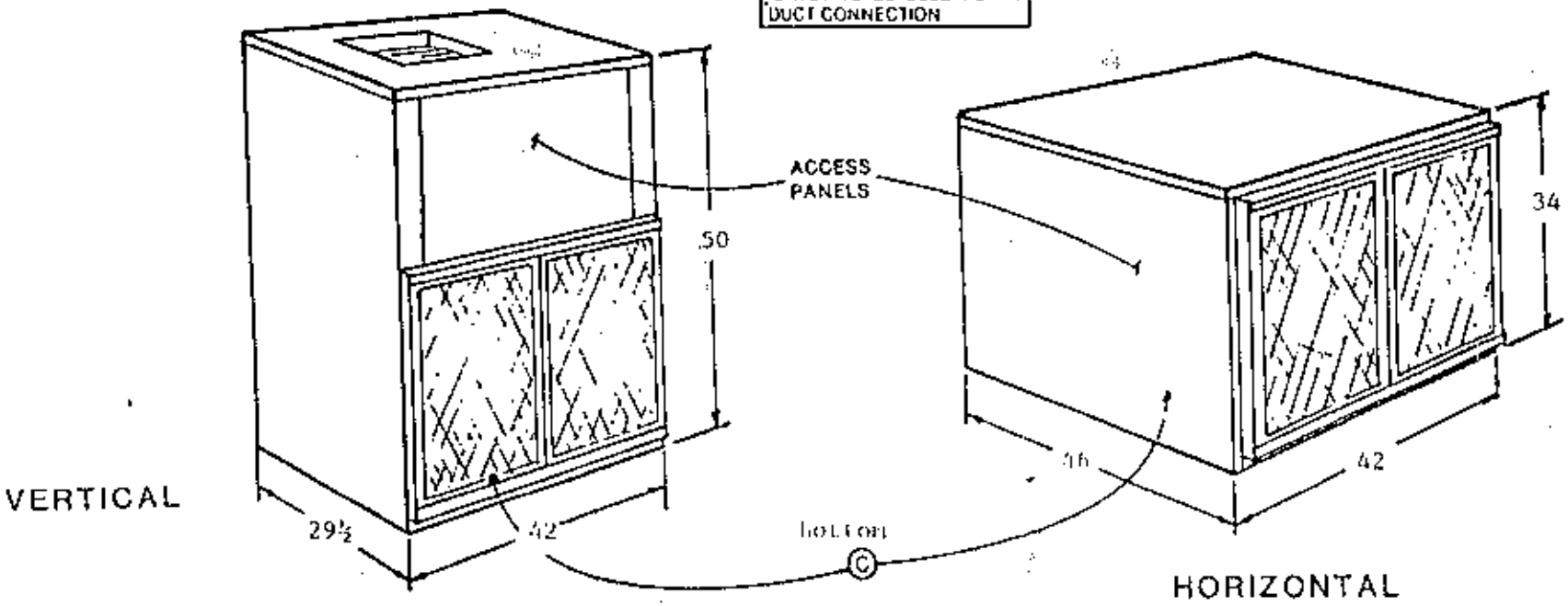

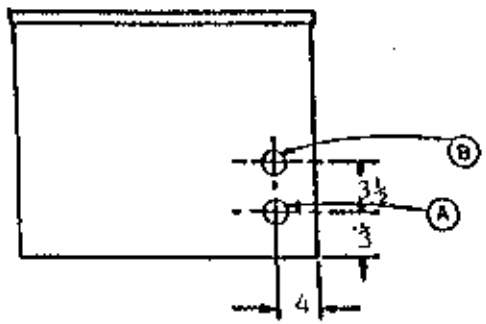

LEFT SIDE

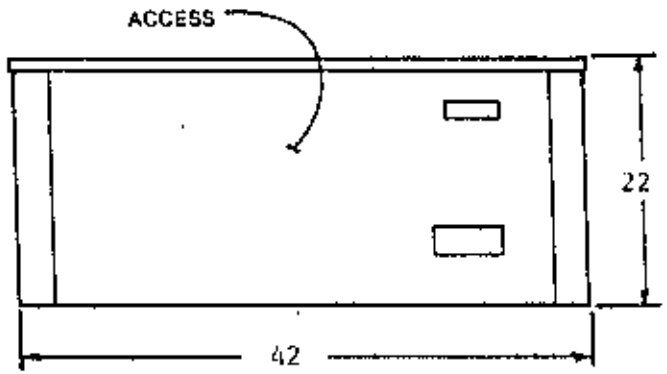

FRONT

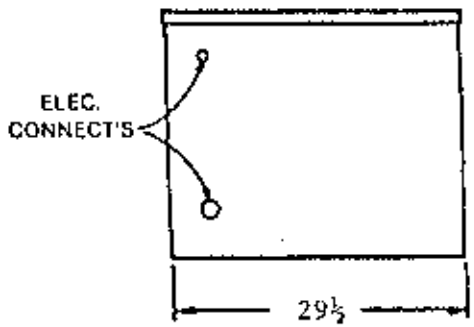

RIGHT SIDE

PIPING CONNECTIONS

(A) Condenser water IN: 1 F.P.T.

(B) Condenser water OUT: 1 F.P.T.

(C) Condensate Drain: 1 F.P.T.

ELECTRICAL

☐ 208-230/1/60
☐ 208-230/3/60

GeoThermal Heat Pumps
ClimateMaster

846-090

REF:	DAE
3 - 14 - 90	HWN

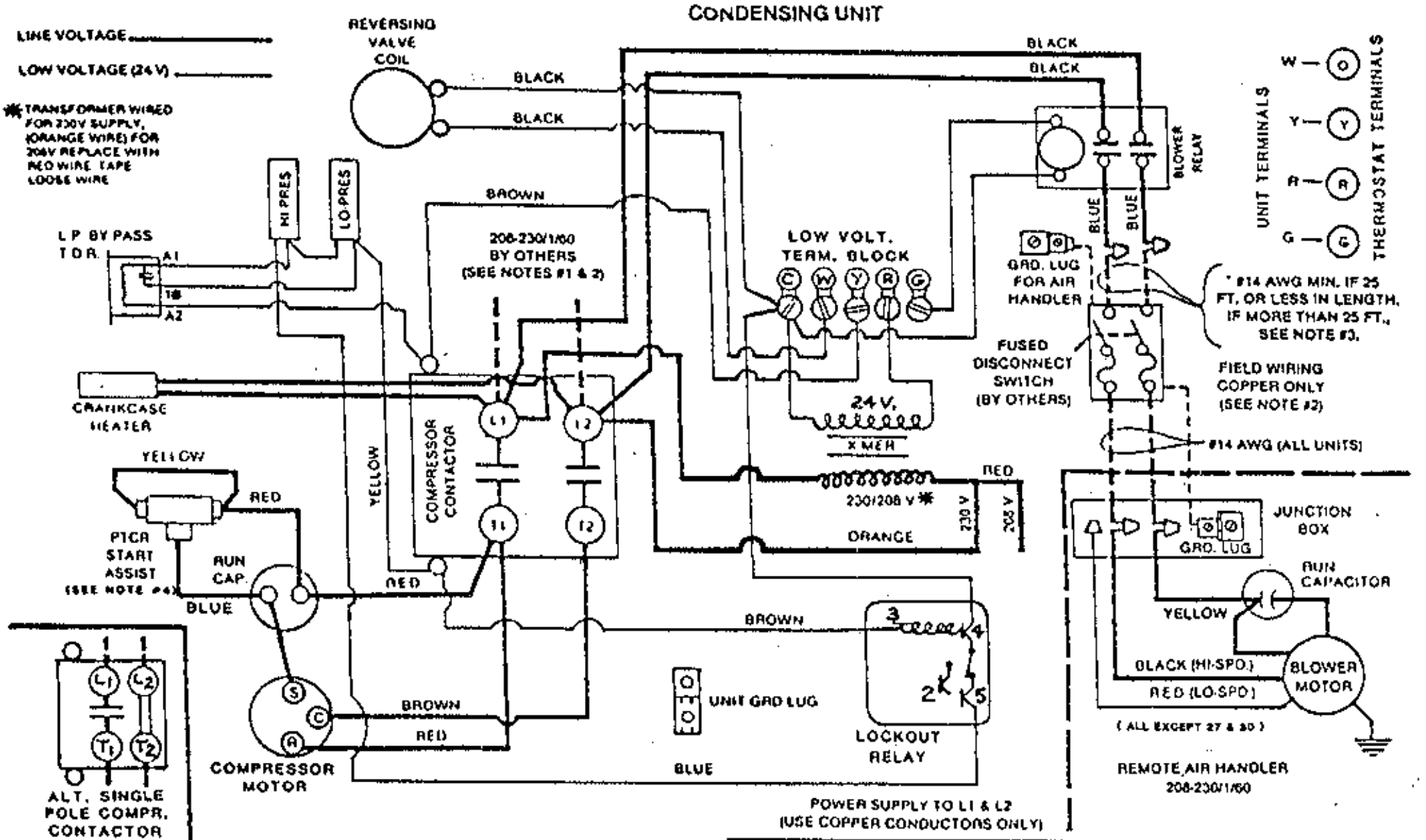

NOTES

1. SEE UNIT RATING PLATE FOR ELECTRICAL RATINGS.
2. ALL FIELD WIRING MUST BE IN ACCORDANCE WITH N.E.C. NFPA NO. 70, LATEST EDITION AND ALL APPLICABLE STATE AND LOCAL CODES.
3. WHEN THESE CONDUCTORS EXCEED 25 FT. IN LENGTH FROM THE OUTDOOR UNIT TO THE FUSED DISCONNECT SWITCH, THEY MUST BE OF THE SAME SIZE (AMPACITY) AS THE SUPPLY CONDUCTORS TO THE OUTDOOR UNIT.
4. USED IN MODELS 846 - 30, 40, 50, 60, & 70.

WIRING DIAGRAM 208-230/1/60
SPLIT SYSTEM HEAT PUMPS 846 SERIES

ClimateMaster

P.O. Box 25788
Oklahoma City, OK 73125

DAE.
E-157E

DATE:
3 - 14 - 90

DWN BY:
HWN

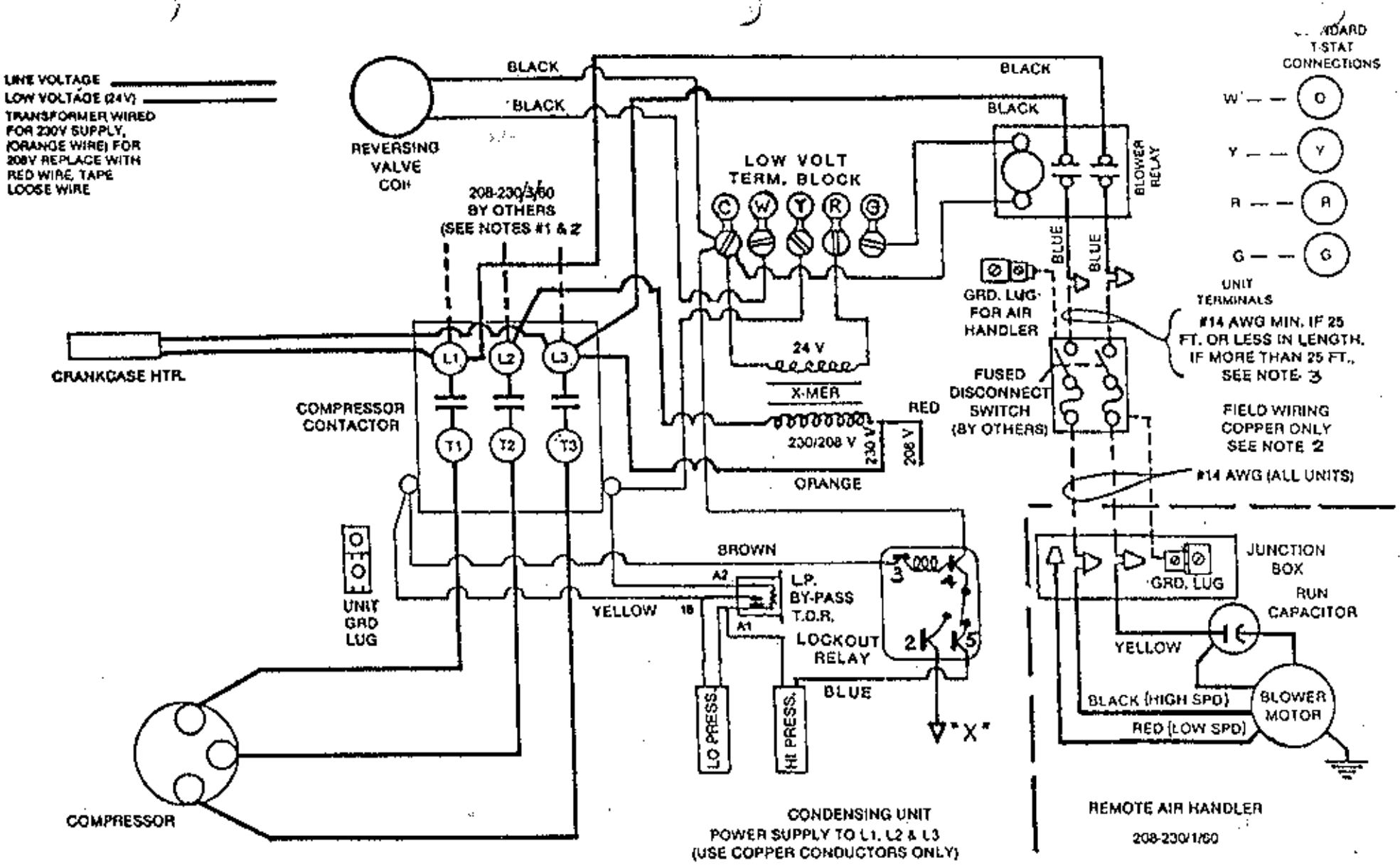

NOTES:

1. SEE UNIT RATING PLATE FOR ELECTRICAL RATINGS.
2. ALL FIELD WIRING MUST BE IN ACCORDANCE WITH N.E.C. NFPA NO. 70, LATEST EDITION, AND ALL APPLICABLE STATE AND LOCAL CODES.
3. WHEN THESE CONDUCTORS EXCEED 25 FT. IN LENGTH, FROM THE OUTDOOR UNIT TO THE FUSED DISCONNECT SWITCH, THEY MUST BE OF THE SAME SIZE (AMPACITY) AS THE SUPPLY CONDUCTORS TO THE OUTDOOR UNIT.

846 SERIES	WIRING DIAGRAM 208-230/3/60	DAE: CM168C
ClimateMaster		DATE: 3 - 14 - 90
		DWN BY: HWN