803 Series

Standard Operating Range
55°F to 95°F Entering Water Temp.

Size 009

Dimensions

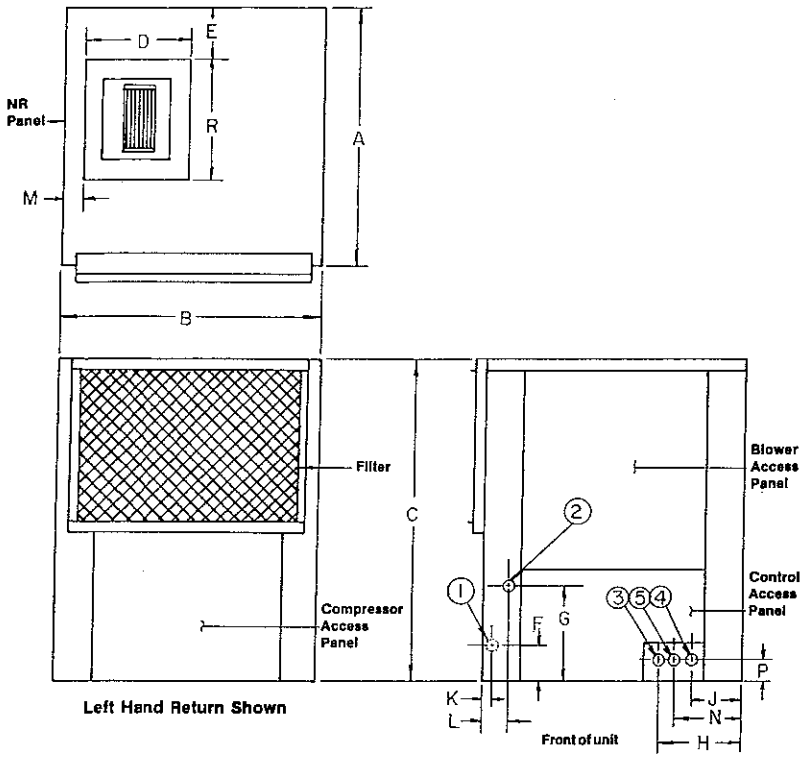

SZ.	A	B	C	D	E	F	G	H	J	K	L	M	N	P	R	
IN.	19 1/8	19 1/8	23 15/16	7	3 13/16	3 5/16	9 13/16	7 1/2	3	1 3/8	1 9/16	1 13/16	5 1/4	2 1/16	9 7/8	
CM.	49	49	61	18	10	8	25	19	8	4	4	4	13	5	25	

FILTER SIZE	10" x 16" x 1" 25 x 41 x 2.5 CM	SHIPPING WGT.	118 lbs. 54 Kg

Air Flow Patterns

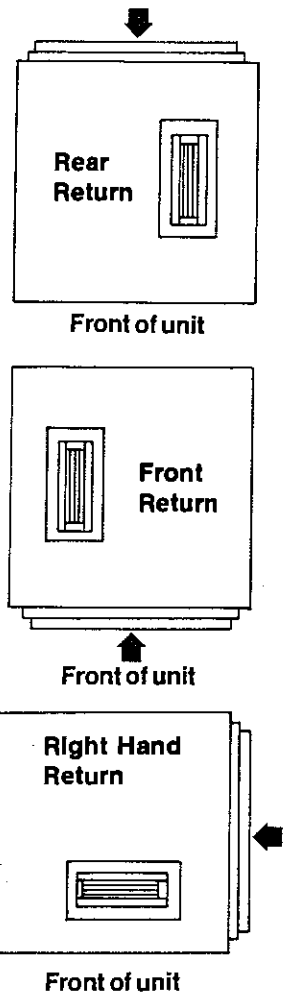

Electrical Data		Blower	Compressor		Min Ckt. Ampacity	Max. Fuse or HACR Size
Voltage	Phase	FLA	RLA	LRA		
208/230	1	0.5	3.3	20.0	4.6	15
265	1	0.5	2.8	16.0	4.0	15

ClimateMaster®
FORMERLY CHP CORP. AND FORMERLY
FRIEDRICH™ CLIMATE MASTER, INC.

2007 Beechgrove Place
Utica, New York 13501
(315) 724-7111

Cooling Performance

Total Cooling Capacity: 9100 Btuh, Power Input: 825 Watts, E.E.R.: 11.0 (at A.R.I. Standard 320-86 Rating Conditions)

Effect of Variation in Entering Air Temperature:

(Based upon 350 CFM & 95°F Leaving Water Temp)

Entering AIR (Deg F) Wet Bulb	Total Capacity (Btuh)	Sensible Capacity (Btuh) @ Entering Air (Deg F) Dry Bulb: 75	80	85	90	95	Heat of Rejection (Btuh)	Power Input (watts)
58	7298	—	—	—	—	—	9938	776
61	7899	9955	—	—	—	—	10629	800
64	8499	8536	7398	8499	—	—	11320	825
67	**9100**	7107	**6400**	7802	9100	—	**11916**	**825**
70	9700	5833	7817	6899	8198	8416	12512	825
73	10201	—	6397	5900	7302	7744	13096	850

Multiplier for Effect of Variation in Air Flow:

Air Flow Rate, CFM	275	290	320	330	**350**	360
Total Capacity	.970	.976	.988	.992	**1.00**	1.004
Sensible Capacity	.934	.947	.973	.982	**1.00**	1.009
Heat of Rejection	.942	.953	.977	.984	**1.00**	1.008
Power Input	.966	.973	.986	.991	**1.00**	1.005

Figures in Bold Face Type are @ A.R.I. Rating Conditions.

Cooling Capacity Correction for Other Leaving Water Temperatures:

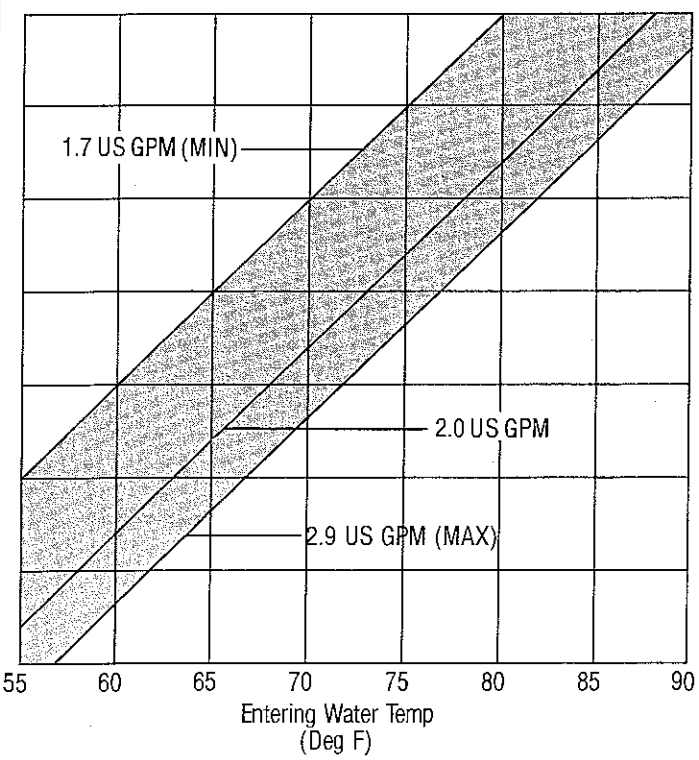

Leaving Water Temp. (Deg F)	Total & Sensible Mult.	Heat of Rejection Mult.	Power Input (watts)
100	.99/1.00	.99	850
95	**1.00/1.00**	**1.00**	**825**
90	1.01/ .99	.99	810
85	1.01/1.00	1.00	780
80	1.02/ .98	.99	750
75	1.02/ .98	.99	730
70	1.02/ .98	.98	700
65	1.03/ .98	.97	660

Heating Performance

Heating Capacity: 10800 Btuh, Power Input: 850 Watts, C.O.P.: 3.7 (at A.R.I. Standard 320-86 Rating Conditions)

Multiplier for Effect of Variation in Entering Air Temperature:

Entering Air Temp. Deg. F.	55	60	65	**70**	75	80	85
Heating Capacity	1.070	1.046	1.019	**1.00**	.981	.963	.948
Heat of Absorption	1.100	1.074	1.036	**1.00**	.964	.939	.914
Power Input	.982	.971	.971	**1.00**	1.029	1.029	1.030

Multiplier for Effect of Variation in Air Flow:

Air Flow Rate, CFM	275	290	320	330	**350**	360
Heating Capacity	.970	.976	.988	.992	**1.00**	1.004
Heat of Absorption	.950	.960	.980	.987	**1.00**	1.007
Power Input	1.017	1.014	1.007	1.005	**1.00**	.998

Figures in Bold Face Type are @ A.R.I. Rating Conditions.

Heating Capacity Correction for Other Leaving Water Temperatures:

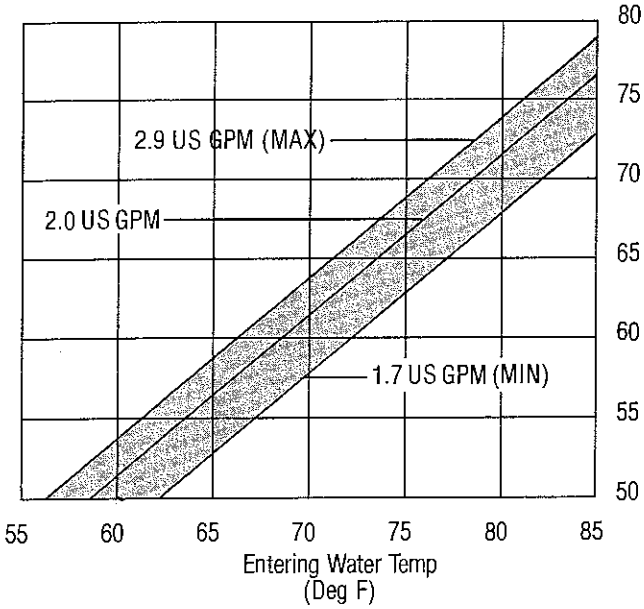

Leaving Water Temp. (Deg F)	Heating Capacity (Btuh)	Heat of Absorption (Btuh)	Power Input (Watts)
80	12000	8928	905
75	11700	8628	900
70	11472	8494	870
65	10950	8000	860
60	10300	7484	825
55	9900	7170	800
50	9200	6555	775

Water Pressure Drop:

	A.R.I.	Typical Application Flow Rates:				
Rate, (GPM/12 MBTU)	**3.2**	2.2	2.5	2.7	3.5	3.8
Water Flow, (US GPM)	**2.4**	1.7	1.9	2.0	2.6	2.9
Pressure Drop, (Ft.) (H_2O)	**4.01**	1.52	2.63	4.00	4.71	5.6
		(min.)		(Recommended)		(max.)

Wiring Diagram

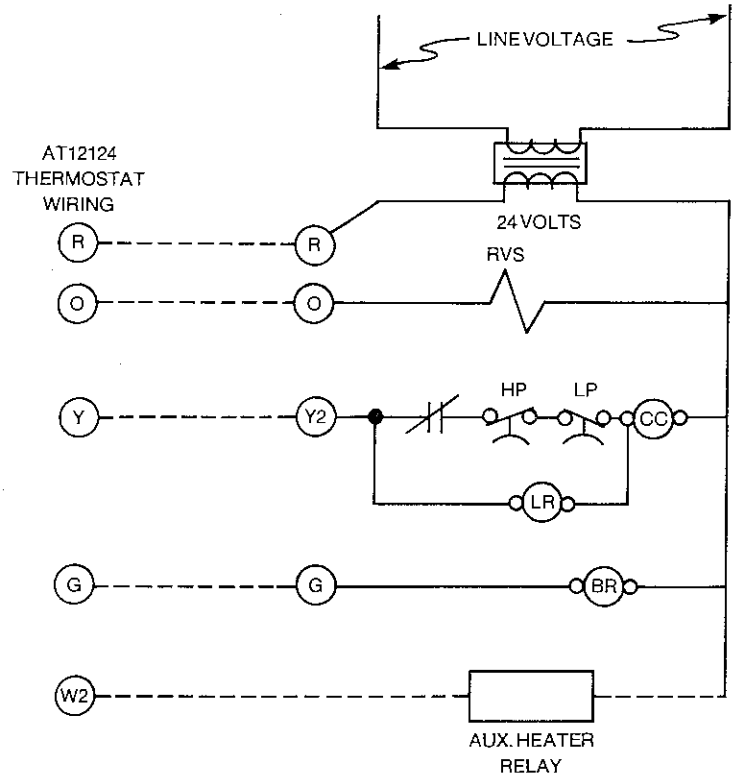

NOTES:
---- Field Wiring
Aux. Heater Relay is a field installed option.

ACO	=	AUTOMATIC CHANGEOVER RELAY
AS	=	ANTI-SHORT CYCLE RELAY
BM	=	BLOWER MOTOR
BMC	=	BLOWER MOTOR CAPACITOR
BR	=	BLOWER RELAY
CC	=	COMPRESSOR CONTACTOR
CCH	=	CRANKCASE HEATER
COMP	=	COMPRESSOR
CPC	=	COMPRESSOR CAPACITOR
CR	=	CONTROL RELAY
DL	=	DEMAND LIMIT RELAY
FS	=	FREEZESTAT
HL	=	HIGH LEVEL CONDENSATE SWITCH
HP	=	HIGH PRESSURE SWITCH
HT	=	HIGH TEMPERATURE SWITCH
LP	=	LOW PRESSURE SWITCH
LR	=	LOCKOUT RELAY
OL	=	OVERLOAD
PR	=	PROGRAM RELAY
RS	=	RANDOM START RELAY
RVR	=	REVERSING VALVE RELAY
RVS	=	REVERSING VALVE SOLENOID
SD	=	SHUTDOWN RELAY
SLR	=	SPECIAL LOCKOUT RELAY
SSM	=	SAFETY SHUTDOWN MODULE
TB	=	24-VOLT TERMINAL BLOCK
TD	=	TIME DELAY RELAY
TR	=	TIMER RELAY
TRANS	=	LINE VOLTAGE TO 24-VOLT TRANSFORMER
NOTE	=	*** (DENOTES AVAILABLE AS OPTION)**

Blower Performance

External Static Pressure (in wg)

Fan Speed	.1	.2	.3	.4	.5	.6	.7	.8	.9	1.0	Min. CFM
Hi	356	332	301	254							240
Lo	330	306	280	250							
Med	300	280	260	240							

Blower Performance is based on wet coil and clean filter

ClimateMaster®
FORMERLY CHP CORP. AND FORMERLY
FRIEDRICH™ CLIMATE MASTER, INC.

2007 Beechgrove Place
Utica, New York 13501
(315) 724-7111 FAX: (315) 724-6945; TWX: 510-600-7973

Continuing engineering research results in steady improvements.
Therefore, these specifications are subject to change without notice.

© 1988 Climate Master Printed in U.S.A. 1/88

803 Series

Standard Operating Range
55°F to 95°F Entering Water Temp.

Size 012

Dimensions

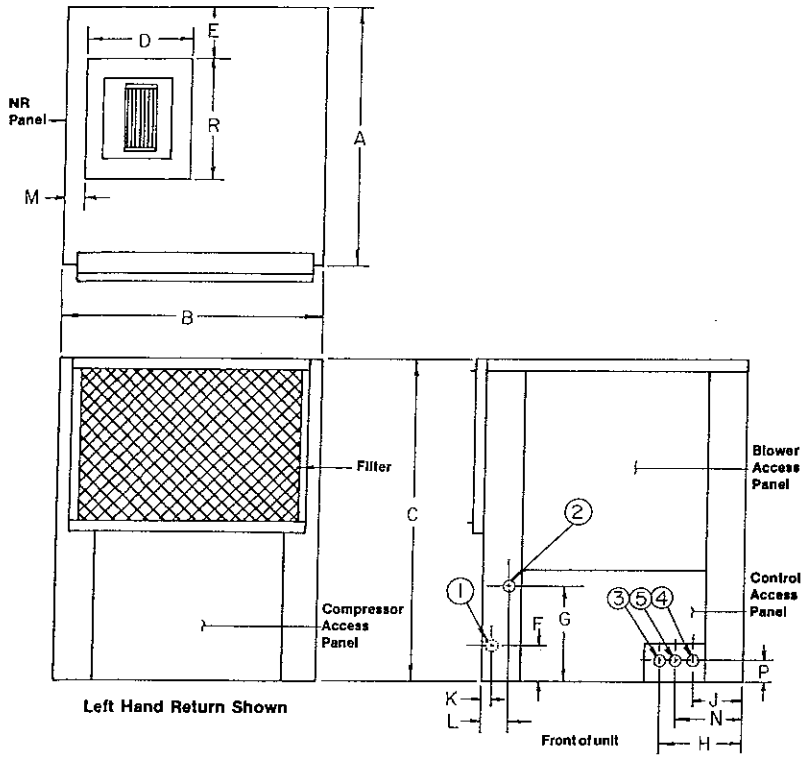

Left Hand Return Shown

SZ.	A	B	C	D	E	F	G	H	J	K	L	M	N	P	R	
IN.	19 1/8	19 1/8	23 15/16	7 3/8	3 13/16	3 5/16	9 13/16	7 1/2	3	1 3/8	1 9/16	1 5/8	5 1/4	2 1/16	8 7/8	
CM.	49	49	61	19	10	8	25	19	8	4	4	4	13	5	23	

FILTER SIZE	10" x 16" x 1"	SHIPPING WGT.	123 lbs.
	25 x 41 x 2.5 CM		56 Kg

Air Flow Patterns

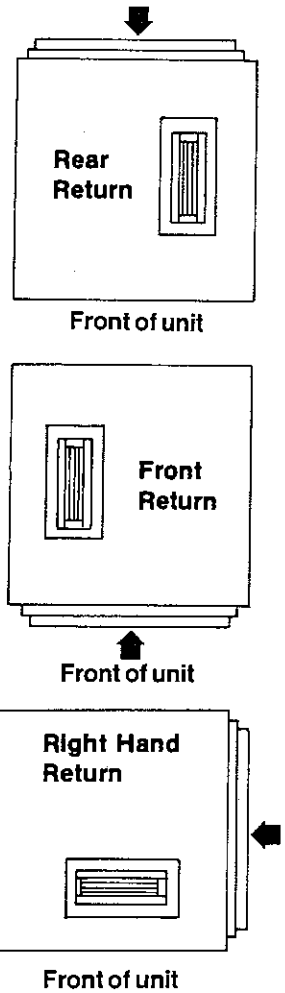

Electrical Data		Blower	Compressor		Min Ckt. Ampacity	Max. Fuse or HACR Size
Voltage	Phase	FLA	RLA	LRA		
208/230	1	0.8	6.3	31.0	8.7	15
265	1	0.8	4.9	27.0	6.9	15

ClimateMaster®
FORMERLY CHP CORP. AND FORMERLY
FRIEDRICH™ CLIMATE MASTER, INC.

2007 Beechgrove Place
Utica, New York 13501
(315) 724-7111

Cooling Performance

Total Cooling Capacity: 12500 Btuh, Power Input: 1225 Watts, E.E.R.: 10.2 (at A.R.I. Standard 320-86 Rating Conditions)

Effect of Variation in Entering Air Temperature:

(Based upon 400 CFM & 95°F Leaving Water Temp)

Entering AIR (Deg F) Wet Bulb	Total Capacity (Btuh)	Sensible Capacity (Btuh) @ Entering Air (Deg F) Dry Bulb: 75	80	85	90	95	Heat of Rejection (Btuh)	Power Input (watts)
58	10300	—	—	—	—	—	14312	1176
61	11000	9399	—	—	—	—	15096	1200
64	11700	8101	9899	11696	—	—	15880	1225
67	**12500**	6803	**8600**	10500	12298	—	**16681**	**1225**
70	13300	5504	7301	9202	11103	12212	17565	1250
73	14000	—	6097	7903	9804	11008	18266	1250

Multiplier for Effect of Variation in Air Flow:

Air Flow Rate, CFM	360	370	380	**400**	425	450
Total Capacity	.986	.990	.993	**1.00**	1.009	1.018
Sensible Capacity	.969	.977	.985	**1.00**	1.019	1.039
Heat of Rejection	.973	.980	.986	**1.00**	1.017	1.034
Power Input	.984	.988	.992	**1.00**	1.010	1.020

Figures in Bold Face Type are @ A.R.I. Rating Conditions.

Cooling Capacity Correction for Other Leaving Water Temperatures:

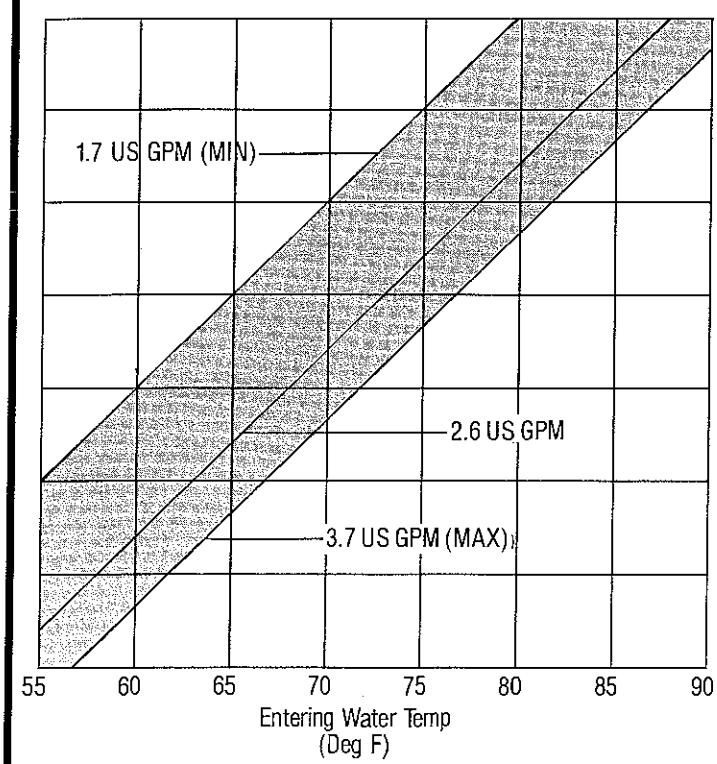

Leaving Water Temp. (Deg F)	Total & Sensible Mult.	Heat of Rejection Mult.	Power Input (watts)
100	.98/1.00	.99	1275
95	**1.00/1.00**	**1.00**	**1225**
90	1.00/1.00	1.00	1200
85	1.02/1.00	1.00	1150
80	1.02/ .99	.99	1125
75	1.03/ .98	.99	1075
70	1.03/ .98	.99	1050
65	1.04/ .96	.98	1025

Heating Performance

Heating Capacity: 15700 Btuh, Power Input: 1325 Watts, C.O.P.: 3.5 (at A.R.I. Standard 320-86 Rating Conditions)

Multiplier for Effect of Variation in Entering Air Temperature:

Entering Air Temp. Deg. F.	55	60	65	**70**	75	80	85
Heating Capacity	1.038	1.025	1.013	**1.00**	.987	.975	.963
Heat of Absorption	1.101	1.066	1.033	**1.00**	.967	.934	.919
Power Input	.898	.925	.962	**1.00**	1.038	1.075	1.110

Multiplier for Effect of Variation in Air Flow:

Air Flow Rate, CFM	360	370	380	**400**	425	450
Heating Capacity	.986	.990	.993	**1.00**	1.009	1.018
Heat of Absorption	.975	.981	.988	**1.00**	1.015	1.031
Power Input	1.012	1.009	1.006	**1.00**	.993	.985

Figures in Bold Face Type are @ A.R.I. Rating Conditions.

Heating Capacity Correction for Other Leaving Water Temperatures:

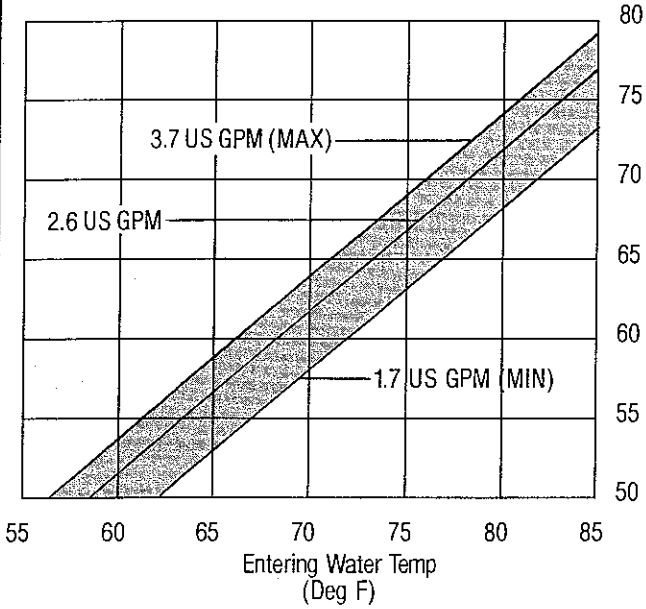

Leaving Water Temp. (Deg F)	Heating Capacity (Btuh)	Heat of Absorption (Btuh)	Power Input (Watts)
80	17400	12622	1400
75	17000	12307	1375
70	16400	11825	1365
65	15800	11278	1325
60	15200	10763	1285
55	14400	10048	1275
50	13100	9004	1200

Water Pressure Drop:

	A.R.I.	Typical Application Flow Rates:				
Rate, (GPM/12 MBTU)	**3.2**	1.6	2.2	2.7	3.2	3.9
Water Flow, (US GPM)	**3.3**	1.7	2.1	2.6	3.1	3.7
Pressure Drop, (Ft.) (H_2O)	**4.03**	1.22	2.3	2.45	4.0	4.23
		(min.)		(Recommended)		(max.)

Wiring Diagram

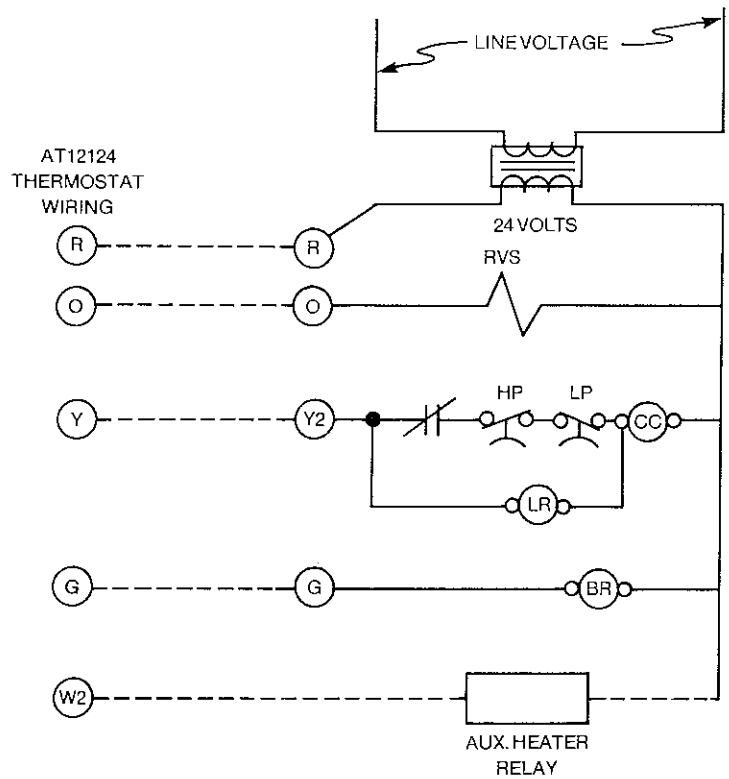

NOTES:
---- Field Wiring
Aux. Heater Relay is a field installed option.

ACO	=	AUTOMATIC CHANGEOVER RELAY	DL	=	DEMAND LIMIT RELAY	RVR	=	REVERSING VALVE RELAY
AS	=	ANTI-SHORT CYCLE RELAY	FS	=	FREEZESTAT	RVS	=	REVERSING VALVE SOLENOID
BM	=	BLOWER MOTOR	HL	=	HIGH LEVEL CONDENSATE SWITCH	SD	=	SHUTDOWN RELAY
BMC	=	BLOWER MOTOR CAPACITOR	HP	=	HIGH PRESSURE SWITCH	SLR	=	SPECIAL LOCKOUT RELAY
BR	=	BLOWER RELAY	HT	=	HIGH TEMPERATURE SWITCH	SSM	=	SAFETY SHUTDOWN MODULE
CC	=	COMPRESSOR CONTACTOR	LP	=	LOW PRESSURE SWITCH	TB	=	24-VOLT TERMINAL BLOCK
CCH	=	CRANKCASE HEATER	LR	=	LOCKOUT RELAY	TD	=	TIME DELAY RELAY
COMP	=	COMPRESSOR	OL	=	OVERLOAD	TR	=	TIMER RELAY
CPC	=	COMPRESSOR CAPACITOR	PR	=	PROGRAM RELAY	TRANS	=	LINE VOLTAGE TO 24-VOLT TRANSFORMER
CR	=	CONTROL RELAY	RS	=	RANDOM START RELAY	**NOTE**	=	*** (DENOTES AVAILABLE AS OPTION)**

Blower Performance

External Static Pressure (in wg)

Fan Speed	.1	.2	.3	.4	.5	.6	.7	.8	.9	1.0	Min. CFM
Hi	450	410	406	384	360						320
Lo	430	412	392	372	350	325					
Med	410	395	378	356	334	320					

Blower Performance is based on wet coil and clean filter

ClimateMaster®
FORMERLY CHP CORP. AND FORMERLY
FRIEDRICH™ CLIMATE MASTER, INC.

2007 Beechgrove Place
Utica, New York 13501
(315) 724-7111 FAX: (315) 724-6945; TWX: 510-600-7973

Continuing engineering research results in steady improvements.
Therefore, these specifications are subject to change without notice.

©1988 Climate Master Printed in U.S.A. 1/88

803 Series

Standard Operating Range
55°F to 95°F Entering Water Temp.

Size 015

Dimensions

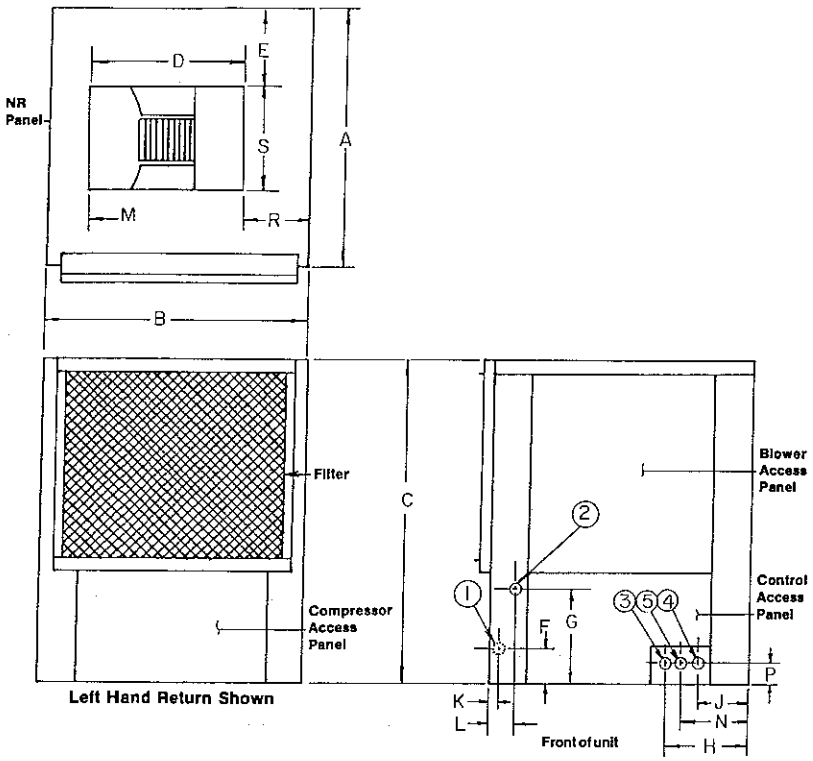

SZ.	A	B	C	D	E	F	G	H	J	K	L	M	N	P	R	S
IN.	21 1/8	21 1/8	34 3/8	10 1/8	5 1/2	3 5/16	9 13/16	7 5/8	3 1/8	1 1/16	1 9/16	1 3/4	5 3/8	2 9/16	9 1/4	7 5/8
CM.	53	53	88	26	14	8	25	19	8	3	4	4	14	7	23	19

FILTER SIZE	20" x 20" x 1" 51 x 51 x 2.5 CM	SHIPPING WGT.	150 lbs. 68 Kg

Air Flow Patterns

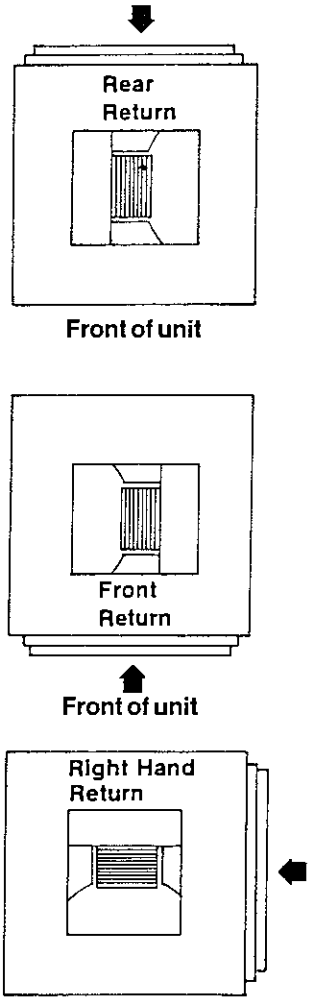

Electrical Data		Blower	Compressor		Min Ckt. Ampacity	Max. Fuse or HACR Size
Voltage	Phase	FLA	RLA	LRA		
208/230	1	0.9	5.9	36.0	8.3	15
265	1	0.8	5.0	33.0	7.4	15

ClimateMaster®
FORMERLY CHP CORP. AND FORMERLY FRIEDRICH™ CLIMATE MASTER, INC.

2007 Beechgrove Place
Utica, New York 13501
(315) 724-7111

Cooling Performance

Total Cooling Capacity: 14500 Btuh, Power Input: 1400 Watts, E.E.R.: 10.4 (at A.R.I. Standard 320-86 Rating Conditions)

Effect of Variation in Entering Air Temperature:

(Based upon 500 CFM & 95°F Leaving Water Temp)

Entering AIR (Deg F) Wet Bulb	Total Capacity (Btuh)	Sensible Capacity (Btuh) @ Entering Air (Deg F) Dry Bulb: 75	80	85	90	95	Heat of Rejection (Btuh)	Power Input (watts)
58	12383	—	—	—	—	—	17099	1350
61	13093	11196	—	—	—	—	17793	1375
64	13804	9599	11804	13802	—	—	18488	1375
67	**14500**	8096	**10300**	12504	14502	—	**19278**	**1400**
70	15196	6499	8796	11000	13205	14626	20068	1425
73	15805	—	7199	9497	11700	13854	20666	1425

Multiplier for Effect of Variation in Air Flow:

Air Flow Rate, CFM	485	490	**500**	515	530	560
Total Capacity	.996	.997	**1.00**	1.004	1.008	1.017
Sensible Capacity	.991	.994	**1.00**	1.009	1.019	1.037
Heat of Rejection	.992	.995	**1.00**	1.008	1.016	1.033
Power Input	.995	.997	**1.00**	1.005	1.010	1.019

Figures in Bold Face Type are @ A.R.I. Rating Conditions.

Cooling Capacity Correction for Other Leaving Water Temperatures:

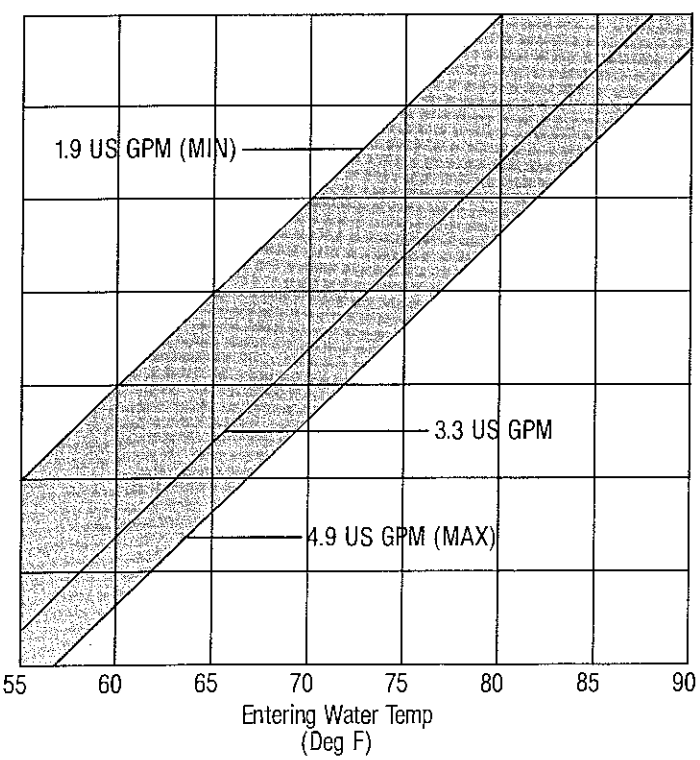

Leaving Water Temp. (Deg F)	Total & Sensible Mult.	Heat of Rejection Mult.	Power Input (watts)
100	.99/1.00	.99	1450
95	**1.00/1.00**	**1.00**	**1400**
90	1.00/1.00	.99	1350
85	1.02/ .99	.99	1300
80	1.03/ .99	.99	1275
75	1.03/ .97	.98	1225
70	1.03/ .96	.98	1200
65	1.04/ .96	.98	1150

Heating Performance

Heating Capacity: 19000 Btuh, Power Input: 1525 Watts, C.O.P.: 3.7 (at A.R.I. Standard 320-86 Rating Conditions)

Multiplier for Effect of Variation in Entering Air Temperature:

Entering Air Temp. Deg. F.	55	60	65	**70**	75	80	85
Heating Capacity	1.051	1.032	1.011	**1.00**	.984	.974	.961
Heat of Absorption	1.092	1.056	1.021	**1.00**	.972	.945	.923
Power Input	.941	.967	.984	**1.00**	1.016	1.049	1.082

Multiplier for Effect of Variation in Air Flow:

Air Flow Rate, CFM	485	490	**500**	515	530	560
Heating Capacity	.996	.997	**1.00**	1.004	1.008	1.017
Heat of Absorption	.992	.995	**1.00**	1.008	1.015	1.031
Power Input	1.004	1.003	**1.00**	.996	.992	.983

Figures in Bold Face Type are @ A.R.I. Rating Conditions.

Heating Capacity Correction for Other Leaving Water Temperatures:

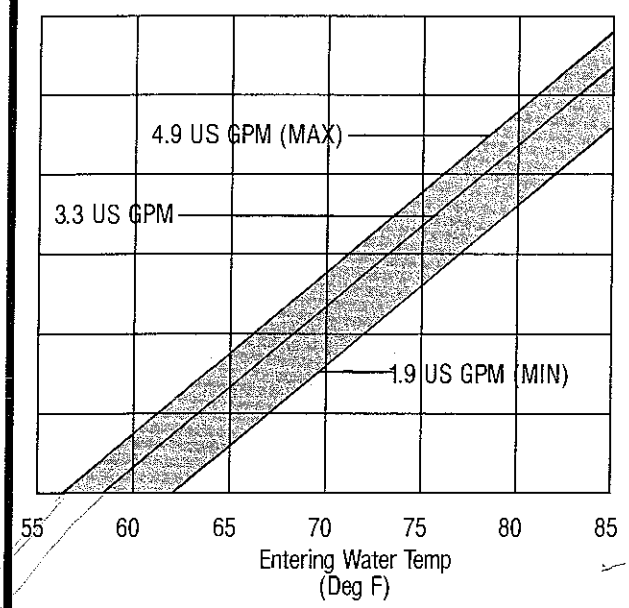

Leaving Water Temp. (Deg F)	Heating Capacity (Btuh)	Heat of Absorption (Btuh)	Power Input (Watts)
80	21275	15700	1635
75	20600	15139	1600
70	20000	14625	1575
65	19200	13995	1525
60	18600	13481	1500
55	17500	12551	1450
50	15700	11007	1375

Water Pressure Drop:

	A.R.I.	Typical Application Flow Rates:				
Rate, (GPM/12 MBTU)	**3.2**	1.6	2.4	2.7	3.2	4.0
Water Flow, (US GPM)	**3.9**	1.9	2.9	3.3	3.9	4.9
Pressure Drop, (Ft.) (H_2O)	**5.47**	1.50	3.21	3.4	5.47	8.25
		(min.)		(Recommended)		(max.)

Wiring Diagram

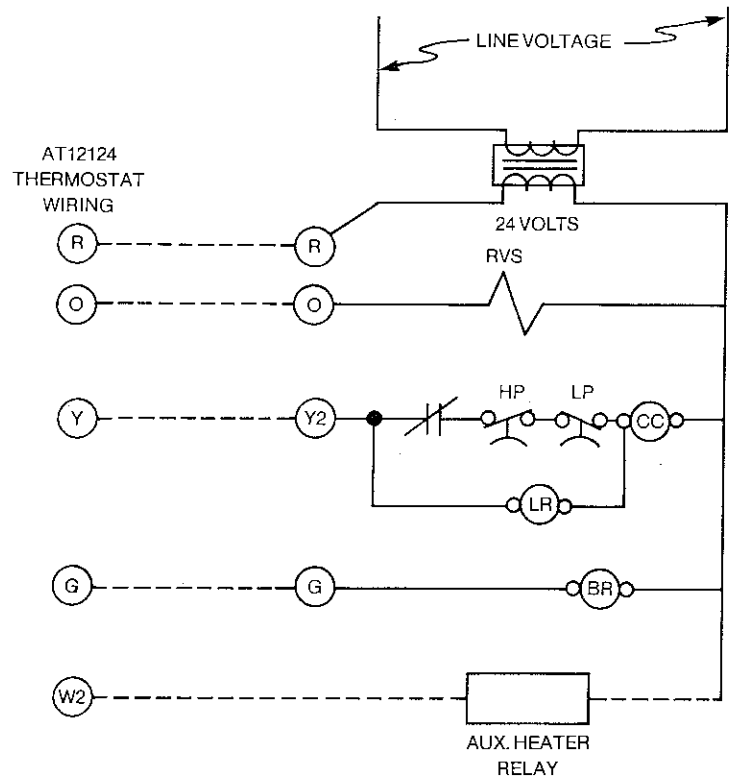

NOTES:
---- Field Wiring
Aux. Heater Relay is a field installed option.

ACO	=	AUTOMATIC CHANGEOVER RELAY	DL	=	DEMAND LIMIT RELAY	RVR	=	REVERSING VALVE RELAY
AS	=	ANTI-SHORT CYCLE RELAY	FS	=	FREEZESTAT	RVS	=	REVERSING VALVE SOLENOID
BM	=	BLOWER MOTOR	HL	=	HIGH LEVEL CONDENSATE SWITCH	SD	=	SHUTDOWN RELAY
BMC	=	BLOWER MOTOR CAPACITOR	HP	=	HIGH PRESSURE SWITCH	SLR	=	SPECIAL LOCKOUT RELAY
BR	=	BLOWER RELAY	HT	=	HIGH TEMPERATURE SWITCH	SSM	=	SAFETY SHUTDOWN MODULE
CC	=	COMPRESSOR CONTACTOR	LP	=	LOW PRESSURE SWITCH	TB	=	24-VOLT TERMINAL BLOCK
CCH	=	CRANKCASE HEATER	LR	=	LOCKOUT RELAY	TD	=	TIME DELAY RELAY
COMP	=	COMPRESSOR	OL	=	OVERLOAD	TR	=	TIMER RELAY
CPC	=	COMPRESSOR CAPACITOR	PR	=	PROGRAM RELAY	TRANS	=	LINE VOLTAGE TO 24-VOLT TRANSFORMER
CR	=	CONTROL RELAY	RS	=	RANDOM START RELAY	**NOTE**	=	*** (DENOTES AVAILABLE AS OPTION)**

Blower Performance

External Static Pressure (In wg)

Fan Speed	.1	.2	.3	.4	.5	.6	.7	.8	.9	1.0	Min. CFM
Hi	560	545	528	507	486						460
Lo	540	528	510	492	473						
Med	516	507	493	478	460						

Blower Performance is based on wet coil and clean filter

ClimateMaster®
FORMERLY CHP CORP. AND FORMERLY FRIEDRICH™ CLIMATE MASTER, INC.

2007 Beechgrove Place
Utica, New York 13501
(315) 724-7111 FAX: (315) 724-6945; TWX: 510-600-7973

Continuing engineering research results in steady improvements. Therefore, these specifications are subject to change without notice.

© 1988 Climate Master Printed in U.S.A. 1/88

803 Series

Standard Operating Range
55°F to 95°F Entering Water Temp.

Size 019

Dimensions

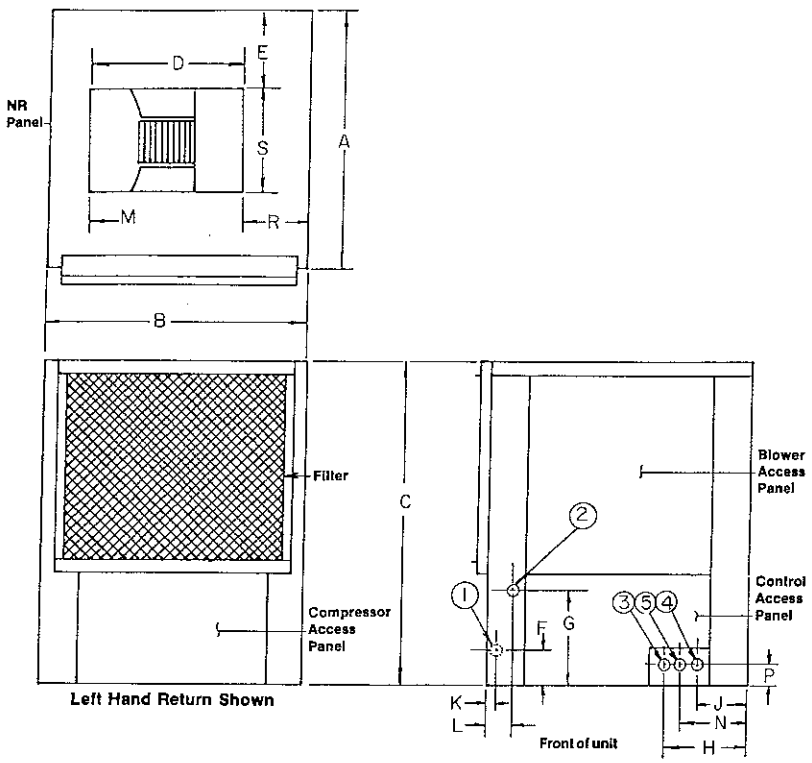

SZ.	A	B	C	D	E	F	G	H	J	K	L	M	N	P	R	S
IN.	21 1/8	21 1/8	34 3/8	12 9/16	6	3 13/16	9 13/16	7 5/8	3 1/8	1 7/16	1 9/16	3	5 3/8	2 9/16	5 9/16	9 1/16
CM.	53	53	88	32	15	10	25	19	8	3	4	8	14	7	14	23

FILTER SIZE	20" x 20" x 1"	SHIPPING WGT.	173 lbs.
	51 x 51 x 2.5 CM		78 Kg

Air Flow Patterns

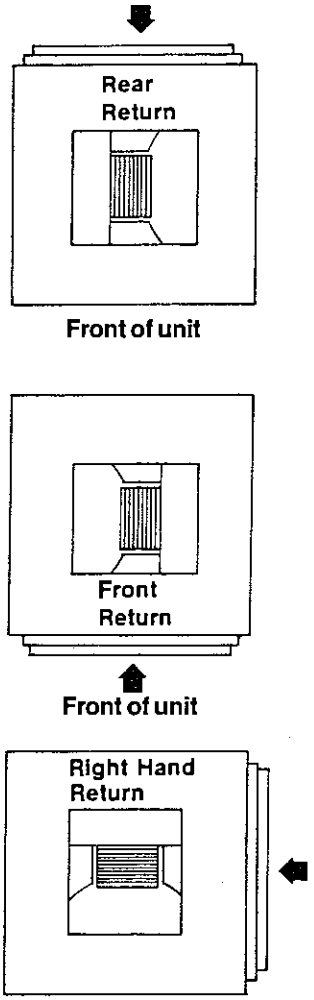

Electrical Data		Blower	Compressor		Min Ckt. Ampacity	Max. Fuse or HACR Size
Voltage	Phase	FLA	RLA	LRA		
208/230	1	1.5	7.6	40.6	11.1	15
265	1	1.2	6.0	34.0	8.7	15

ClimateMaster®
FORMERLY CHP CORP. AND FORMERLY FRIEDRICH™ CLIMATE MASTER, INC.
2007 Beechgrove Place
Utica, New York 13501
(315) 724-7111

Cooling Performance

Total Cooling Capacity: 19000 Btuh, Power Input: 1750 Watts, E.E.R.: 10.9 (at A.R.I. Standard 320-86 Rating Conditions)

Effect of Variation in Entering Air Temperature:

(Based upon 650 CFM & 95°F Leaving Water Temp)

Entering AIR (Deg F) Wet Bulb	Total Capacity (Btuh)	Sensible Capacity (Btuh) @ Entering Air (Deg F) Dry Bulb: 75	80	85	90	95	Heat of Rejection (Btuh)	Power Input (watts)
58	16606	—	—	—	—	—	22051	1601
61	17404	15095	—	—	—	—	23025	1650
64	18202	12996	15902	18195	—	—	23999	1699
67	**19000**	10898	**13900**	16902	19000	—	**24973**	**1750**
70	19893	8799	11801	14803	17806	—	26046	1801
73	20805	—	9799	12802	15804	18807	27121	1850

Multiplier for Effect of Variation in Air Flow:

Air Flow Rate, CFM	520	625	**650**	690	770	800
Total Capacity	.972	.995	**1.00**	1.009	1.026	1.037
Sensible Capacity	.968	.988	**1.00**	1.019	1.057	1.072
Heat of Rejection	.983	.990	**1.00**	1.017	1.050	1.063
Power Input	.990	.994	**1.00**	1.010	1.030	1.037

Figures in Bold Face Type are @ A.R.I. Rating Conditions.

Cooling Capacity Correction for Other Leaving Water Temperatures:

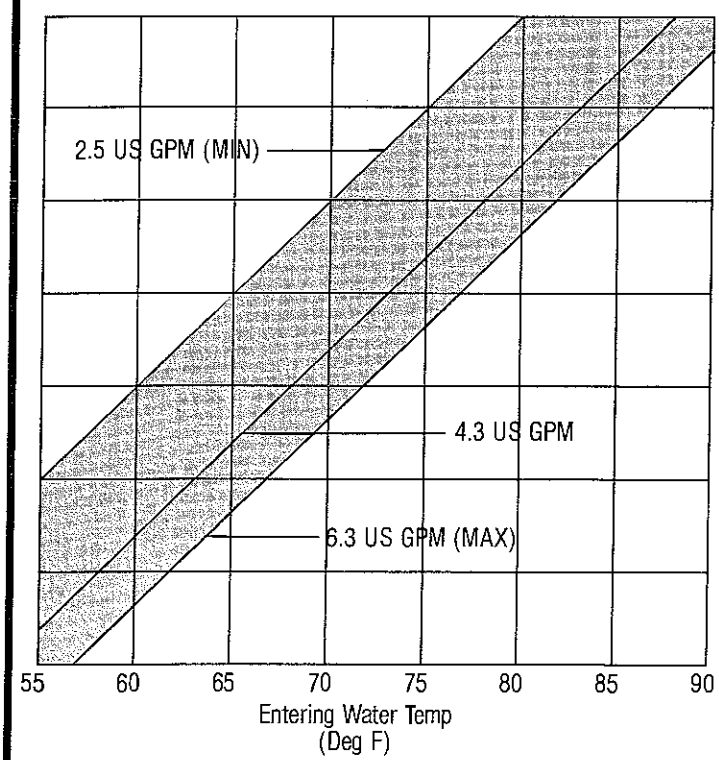

Leaving Water Temp. (Deg F)	Total & Sensible Mult.	Heat of Rejection Mult.	Power Input (watts)
100	.99/ .99	.99	1800
95	**1.00/1.00**	**1.00**	**1750**
90	1.01/1.00	1.00	1700
85	1.03/ .99	1.00	1625
80	1.03/ .98	.99	1600
75	1.03/ .97	.99	1545
70	1.03/ .96	.98	1475
65	1.04/ .96	.98	1425

Heating Performance

Heating Capacity: 23000 Btuh, Power Input: 1875 Watts, C.O.P.: 3.6 (at A.R.I. Standard 320-86 Rating Conditions)

Multiplier for Effect of Variation in Entering Air Temperature:

Entering Air Temp. Deg. F.	55	60	65	**70**	75	80	85
Heating Capacity	1.013	1.009	1.009	**1.00**	.991	.983	.973
Heat of Absorption	1.061	1.043	1.027	**1.00**	.973	.950	.936
Power Input	.884	.920	.960	**1.00**	1.040	1.067	1.092

Multiplier for Effect of Variation in Air Flow:

Air Flow Rate, CFM	520	625	**650**	690	770	800
Heating Capacity	.99	.995	**1.00**	1.009	1.026	1.032
Heat of Absorption	.984	.992	**1.00**	1.012	1.037	1.046
Power Input	1.000	1.000	**1.00**	1.000	1.000	1.000

Figures in Bold Face Type are @ A.R.I. Rating Conditions.

Heating Capacity Correction for Other Leaving Water Temperatures:

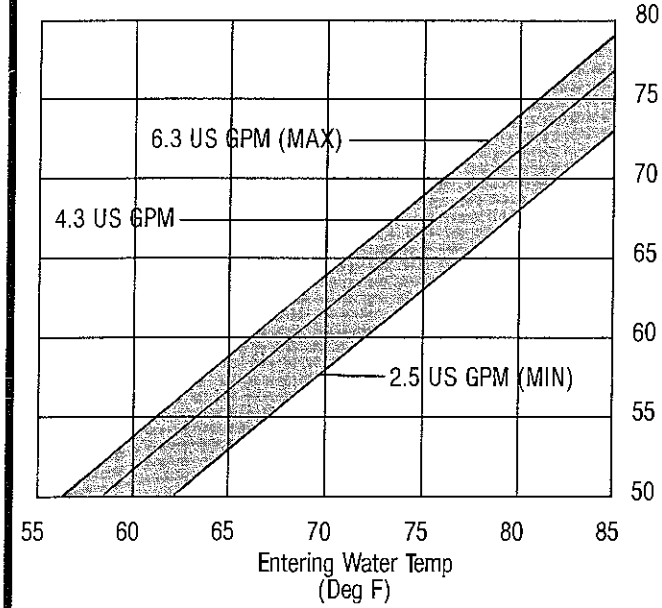

Leaving Water Temp. (Deg F)	Heating Capacity (Btuh)	Heat of Absorption (Btuh)	Power Input (Watts)
80	25600	18859	1975
75	25000	18345	1950
70	24400	17830	1925
65	23200	16801	1875
60	22400	16086	1850
55	21200	15057	1800
50	19100	13298	1700

Water Pressure Drop:

	A.R.I.	Typical Application Flow Rates:				
Rate, (GPM/12 MBTU)	**3.2**	1.6	2.2	2.7	3.2	3.9
Water Flow, (US GPM)	**5.0**	2.5	3.5	4.3	5.0	6.3
Pressure Drop, (Ft.) (H_2O)	**8.67**	2.49	2.95	3.3	8.67	12.96
		(min.)		(Recommended)		(max.)

Wiring Diagram

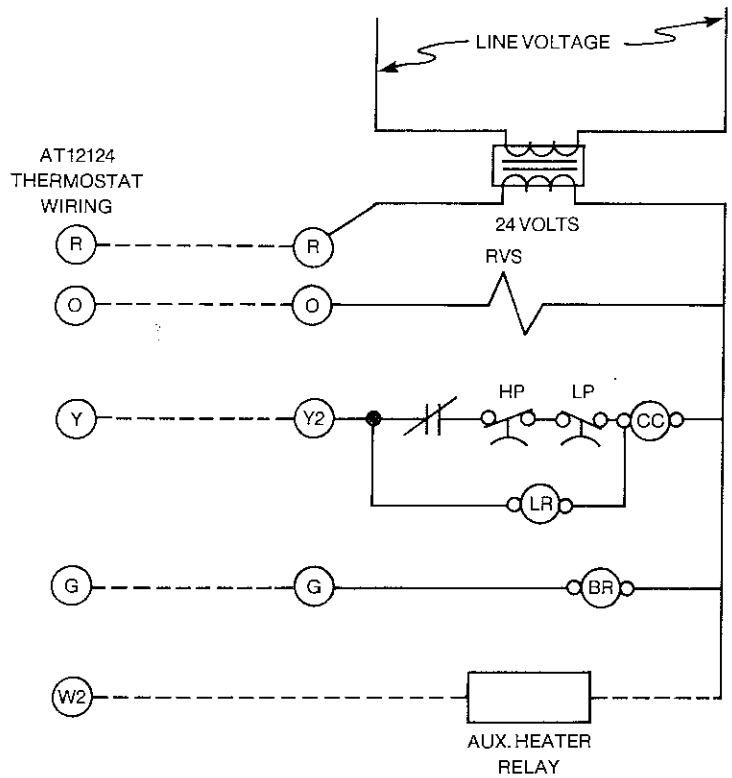

NOTES:
---- Field Wiring
Aux. Heater Relay is a field installed option.

ACO	=	AUTOMATIC CHANGEOVER RELAY	DL	=	DEMAND LIMIT RELAY	RVR	=	REVERSING VALVE RELAY
AS	=	ANTI-SHORT CYCLE RELAY	FS	=	FREEZESTAT	RVS	=	REVERSING VALVE SOLENOID
BM	=	BLOWER MOTOR	HL	=	HIGH LEVEL CONDENSATE SWITCH	SD	=	SHUTDOWN RELAY
BMC	=	BLOWER MOTOR CAPACITOR	HP	=	HIGH PRESSURE SWITCH	SLR	=	SPECIAL LOCKOUT RELAY
BR	=	BLOWER RELAY	HT	=	HIGH TEMPERATURE SWITCH	SSM	=	SAFETY SHUTDOWN MODULE
CC	=	COMPRESSOR CONTACTOR	LP	=	LOW PRESSURE SWITCH	TB	=	24-VOLT TERMINAL BLOCK
CCH	=	CRANKCASE HEATER	LR	=	LOCKOUT RELAY	TD	=	TIME DELAY RELAY
COMP	=	COMPRESSOR	OL	=	OVERLOAD	TR	=	TIMER RELAY
CPC	=	COMPRESSOR CAPACITOR	PR	=	PROGRAM RELAY	TRANS	=	LINE VOLTAGE TO 24-VOLT TRANSFORMER
CR	=	CONTROL RELAY	RS	=	RANDOM START RELAY	**NOTE**	=	*** (DENOTES AVAILABLE AS OPTION)**

Blower Performance

External Static Pressure (in wg)

Fan Speed	.1	.2	.3	.4	.5	.6	.7	.8	.9	1.0	Min. CFM
Hi	800	760	715	665	600						520
Lo	700	675	635	600	550						
Med	650	625	600	560	520						

Blower Performance is based on wet coil and clean filter

ClimateMaster®
FORMERLY CHP CORP. AND FORMERLY FRIEDRICH™ CLIMATE MASTER, INC.

2007 Beechgrove Place
Utica, New York 13501
(315) 724-7111 FAX: (315) 724-6945; TWX: 510-600-7973

Continuing engineering research results in steady improvements. Therefore, these specifications are subject to change without notice.

© 1988 Climate Master Printed in U.S.A. 1/88

803 Series

Down Flow
Standard Operating Range
55°F to 95°F Entering Water Temp.

Size 024

Dimensions

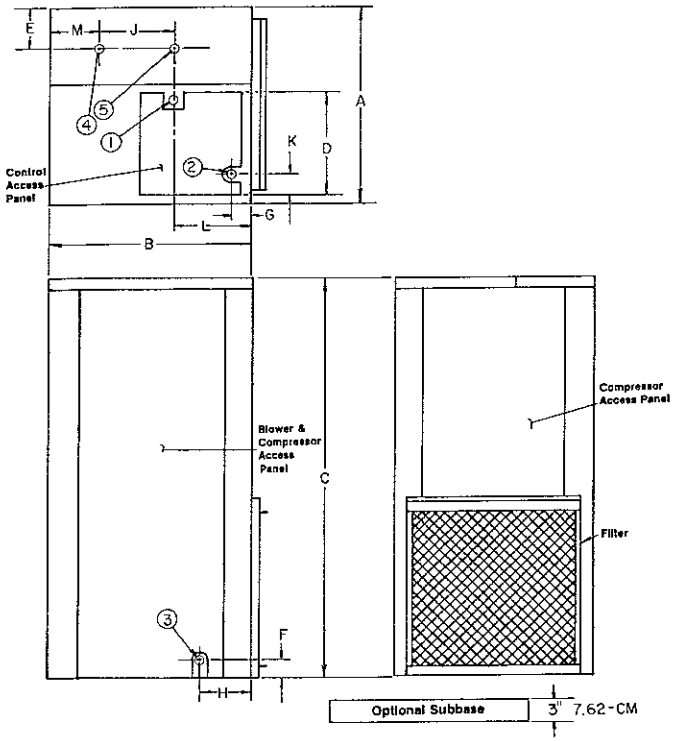

SZ.	A	B	C	D	E	F	G	H	J	K	L	M	N	P	R	S	
IN.	23 1/8	23 1/8	38 7/8	14 3/8	4 7/8	1 3/16	1 9/16	7 1/2	7 11/16	3	6 11/16	6 9/16					
CM.	58	58	99	37	13	3	4	19	20	8	17	16					

FILTER SIZE	20" x 20" x 1"	SHIPPING WGT.	210 lbs.
	51 x 51 x 2.5 CM		95 Kg

Air Flow Patterns

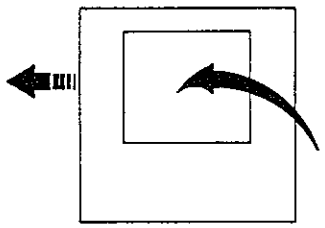

Front of unit

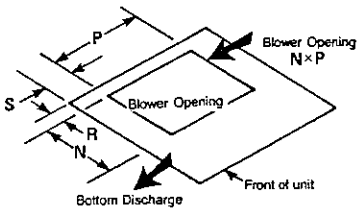

Electrical Data		Blower	Compressor		Min Ckt. Ampacity	Max. Fuse or HACR Size
Voltage	Phase	FLA	RLA	LRA		
208/230	1	1.6	11.8	54.0	16.4	25
265	1	1.5	9.3	45.0	11.4	20

ClimateMaster®
FORMERLY CHP CORP. AND FORMERLY FRIEDRICH™ CLIMATE MASTER, INC.

2007 Beechgrove Place
Utica, New York 13501
(315) 724-7111

Cooling Performance

Total Cooling Capacity: 25400 Btuh, Power Input: 2275 Watts, E.E.R.: 11.2 (at A.R.I. Standard 320-86 Rating Conditions)

Effect of Variation in Entering Air Temperature:

(Based upon 800 CFM & 95°F Leaving Water Temp)

Entering AIR (Deg F) Wet Bulb	Total Capacity (Btuh)	Sensible Capacity (Btuh) @ Entering Air (Deg F) Dry Bulb: 75	80	85	90	95	Heat of Rejection (Btuh)	Power Input (watts)
58	—	—	—	—	—	—	26233	2125
61	23266	19114	—	—	—	—	28621	2175
64	24333	16456	20134	23408	—	—	31009	2225
67	**25400**	13798	**17600**	21402	25203	—	**33165**	**2275**
70	26594	11141	14942	18797	22598	—	35122	2325
73	27813	—	12408	16192	19934	—	34989	2400

Multiplier for Effect of Variation in Air Flow:

Air Flow Rate, CFM	620	780	**800**	950	1050	1150
Total Capacity	.981	.997	**1.00**	1.026	1.044	1.061
Sensible Capacity	.969	.992	**1.00**	1.058	1.097	1.136
Heat of Rejection	.986	.993	**1.00**	1.051	1.085	1.119
Power Input	.989	.996	**1.00**	1.030	1.050	1.070

Figures in Bold Face Type are @ A.R.I. Rating Conditions.

Cooling Capacity Correction for Other Leaving Water Temperatures:

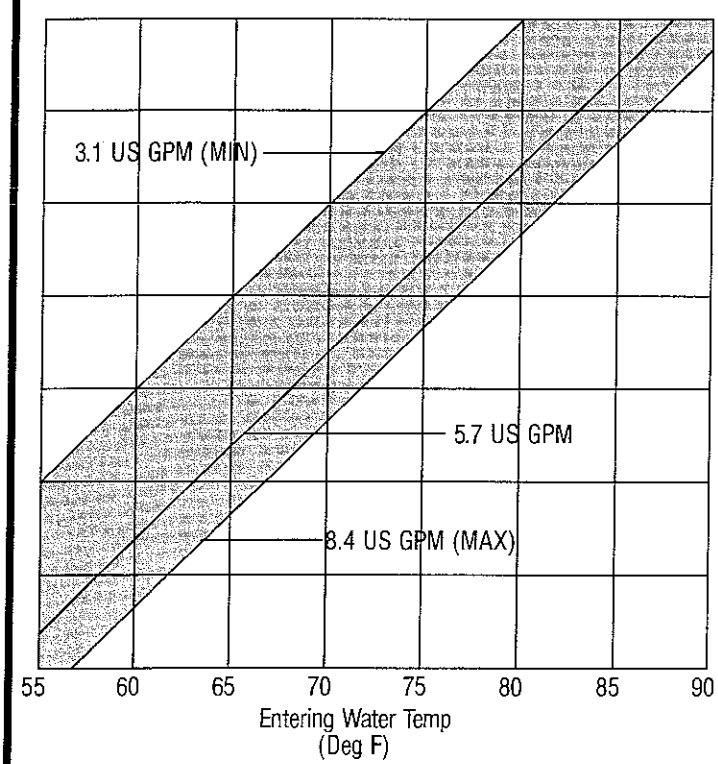

Leaving Water Temp. (Deg F)	Total & Sensible Mult.	Heat of Rejection Mult.	Power Input (watts)
100	.99/1.00	1.00	2325
95	**1.00/1.00**	**1.00**	**2275**
90	1.00/1.00	1.00	2225
85	1.02/ .99	1.00	2125
80	1.02/ .99	.99	2075
75	1.03/ .98	.99	1975
70	1.03/ .97	.99	1925
65	1.04/ .97	.99	1900

Heating Performance

Heating Capacity: 35000 Btuh, Power Input: 25956 Watts, C.O.P.: 2650 (at A.R.I. Standard 320-86 Rating Conditions)

Multiplier for Effect of Variation in Entering Air Temperature:

Entering Air Temp. Deg. F.	55	60	65	**70**	75	80	85
Heating Capacity	1.030	1.023	1.017	**1.00**	.971	.931	.892
Heat of Absorption	1.073	1.054	1.036	**1.00**	.948	.881	.823
Power Input	.906	.934	.962	**1.00**	1.038	1.075	1.101

Multiplier for Effect of Variation in Air Flow:

Air Flow Rate, CFM	620	780	**800**	950	1050	1150
Heating Capacity	.968	.997	**1.00**	1.026	1.044	1.061
Heat of Absorption	.964	.994	**1.00**	1.043	1.071	1.099
Power Input	1.003	1.002	**1.00**	.987	.978	.969

Figures in Bold Face Type are @ A.R.I. Rating Conditions.

Heating Capacity Correction for Other Leaving Water Temperatures:

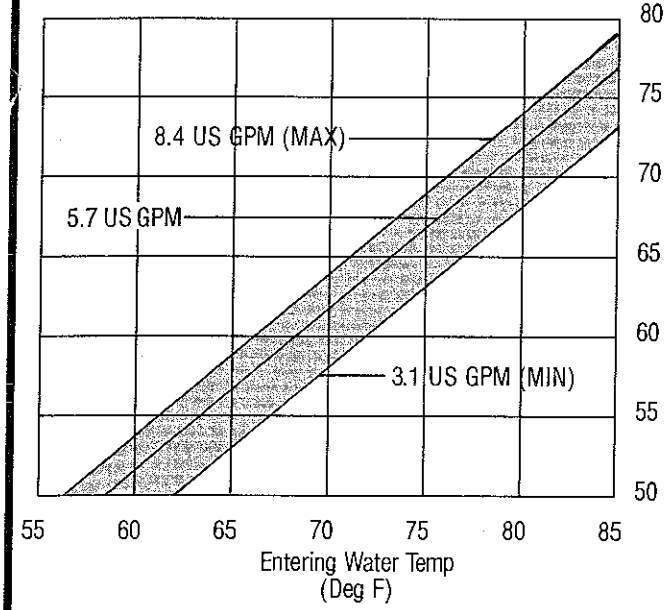

Leaving Water Temp. (Deg F)	Heating Capacity (Btuh)	Heat of Absorption (Btuh)	Power Input (Watts)
80	39500	29944	2800
75	39000	29444	2800
70	38500	28614	2750
65	34700	26400	2675
60	34200	25326	2600
55	32600	23897	2550
50	30800	22353	2475

Water Pressure Drop:

	A.R.I.	Typical Application Flow Rates:				
Rate, (GPM/12 MBTU)	**3.1**	1.5	2.2	2.7	3.5	3.9
Water Flow, (US GPM)	**6.6**	3.1	4.6	5.7	7.4	8.4
Pressure Drop, (Ft.) (H_2O)	**12.58**	3.23	3.9	11.7	13.3	19.21
		(min.)		(Recommended)		(max.)

Wiring Diagram

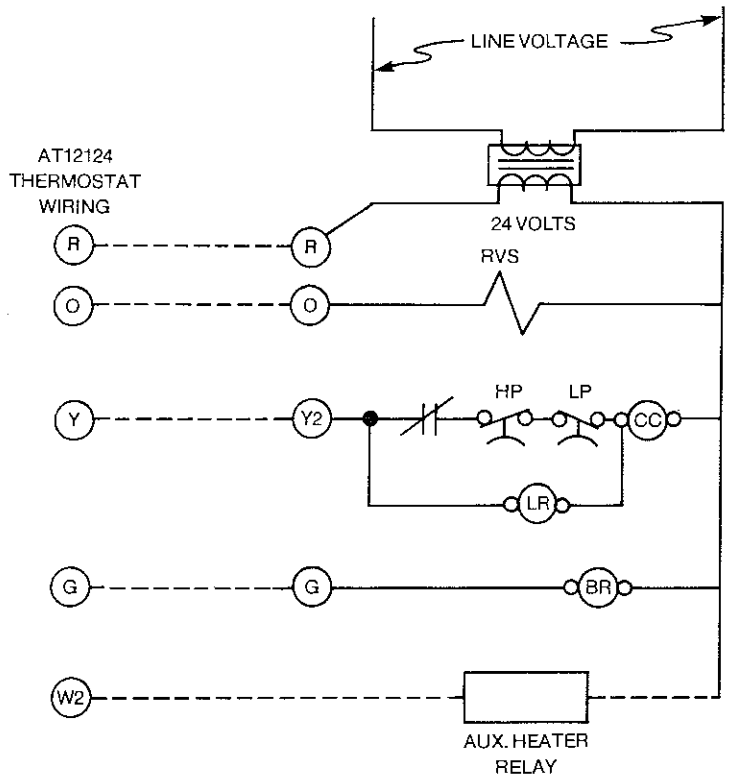

NOTES:
---- Field Wiring
Aux. Heater Relay is a field installed option.

ACO	=	AUTOMATIC CHANGEOVER RELAY
AS	=	ANTI-SHORT CYCLE RELAY
BM	=	BLOWER MOTOR
BMC	=	BLOWER MOTOR CAPACITOR
BR	=	BLOWER RELAY
CC	=	COMPRESSOR CONTACTOR
CCH	=	CRANKCASE HEATER
COMP	=	COMPRESSOR
CPC	=	COMPRESSOR CAPACITOR
CR	=	CONTROL RELAY
DL	=	DEMAND LIMIT RELAY
FS	=	FREEZESTAT
HL	=	HIGH LEVEL CONDENSATE SWITCH
HP	=	HIGH PRESSURE SWITCH
HT	=	HIGH TEMPERATURE SWITCH
LP	=	LOW PRESSURE SWITCH
LR	=	LOCKOUT RELAY
OL	=	OVERLOAD
PR	=	PROGRAM RELAY
RS	=	RANDOM START RELAY
RVR	=	REVERSING VALVE RELAY
RVS	=	REVERSING VALVE SOLENOID
SD	=	SHUTDOWN RELAY
SLR	=	SPECIAL LOCKOUT RELAY
SSM	=	SAFETY SHUTDOWN MODULE
TB	=	24-VOLT TERMINAL BLOCK
TD	=	TIME DELAY RELAY
TR	=	TIMER RELAY
TRANS	=	LINE VOLTAGE TO 24-VOLT TRANSFORMER
NOTE	=	*** (DENOTES AVAILABLE AS OPTION)**

Blower Performance

External Static Pressure (In wg)

Fan Speed	.1	.2	.3	.4	.5	.6	.7	.8	.9	1.0	Min. CFM
Hi	1150	1070	970	895	780						620
Lo	1020	945	860	775	730						
Med	890	825	760	690	620						

Blower Performance is based on wet coil and clean filter

ClimateMaster®
FORMERLY CHP CORP. AND FORMERLY FRIEDRICH™ CLIMATE MASTER, INC.

2007 Beechgrove Place
Utica, New York 13501
(315) 724-7111 FAX: (315) 724-6945; TWX: 510-600-7973

Continuing engineering research results in steady improvements. Therefore, these specifications are subject to change without notice.

© 1988 Climate Master Printed in U.S.A. 1/88

803 Series

Down Flow
Standard Operating Range
55°F to 95°F Entering Water Temp.

Size 030

Dimensions

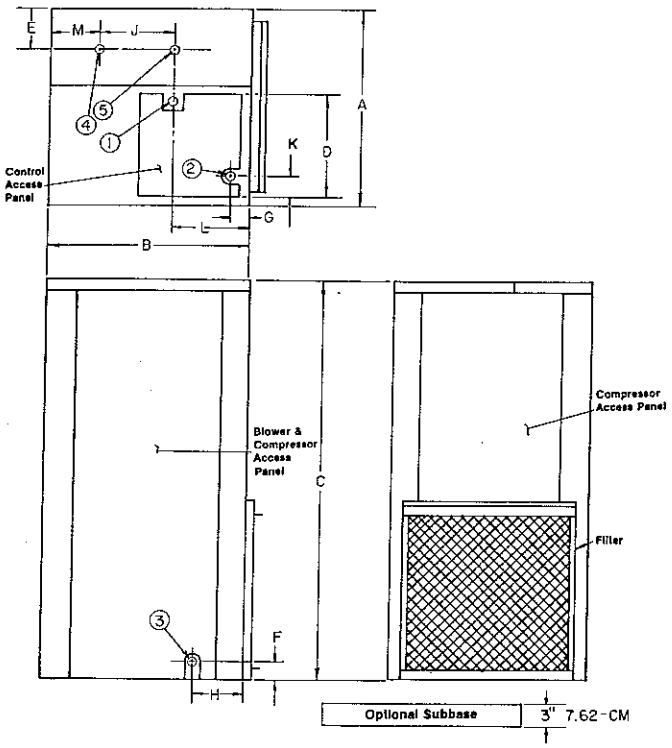

SZ.	A	B	C	D	E	F	G	H	J	K	L	M	N	P	R	S	
IN.	23 1/8	23 1/8	38 7/8	14 3/8	4 7/8	1 3/16	1 9/16	7 1/2	7 11/16	3	6 11/16	6 9/16					
CM.	58	58	99	37	13	3	4	19	20	8	17	16					

FILTER SIZE	20" x 20" x 1" 51 x 51 x 2.5 CM	SHIPPING WGT.	225 lbs. 100 Kg

Air Flow Patterns

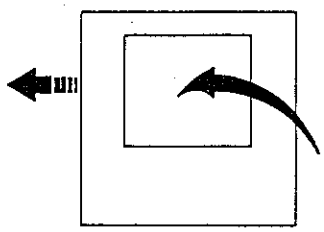

Front of unit

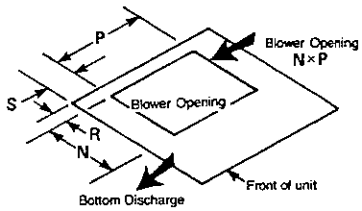

Electrical Data		Blower	Compressor		Min Ckt. Ampacity	Max. Fuse or HACR Size
Voltage	Phase	FLA	RLA	LRA		
208/230	1	2.0	14.0	65.0	19.5	30
265	1	2.0	9.2	60.0	13.9	20
208/230	3	1.6	11.2	55.0	17.2	25
460	3	1.0	4.4	28.0	6.5	15

ClimateMaster®

FORMERLY CHP CORP. AND FORMERLY
FRIEDRICH™ CLIMATE MASTER, INC.

2007 Beechgrove Place
Utica, New York 13501
(315) 724-7111

Cooling Performance

Total Cooling Capacity: 30000 Btuh, Power Input: 2900 Watts, E.E.R.: 10.3 (at A.R.I. Standard 320-86 Rating Conditions)

Effect of Variation in Entering Air Temperature:

(Based upon 1000 CFM & 95°F Leaving Water Temp)

Entering AIR (Deg F) Wet Bulb	Total Capacity (Btuh)	Sensible Capacity (Btuh) @ Entering Air (Deg F) Dry Bulb: 75	80	85	90	95	Heat of Rejection (Btuh)	Power Input (watts)
58	22380	—	—	—	—	—	31639	2697
61	24990	23806	—	—	—	—	34392	2749
64	27600	20405	25201	27599	—	—	37145	2699
67	**30000**	17200	**21800**	26596	29997	—	**39898**	**2900**
70	33600	—	15391	20209	24808	27795	44007	3051
73	27813	—	12408	16192	19934	—	34989	2400

Multiplier for Effect of Variation in Air Flow:

Air Flow Rate, CFM	805	880	950	**1000**	1100	1230
Total Capacity	.979	.983	.993	**1.00**	1.014	1.027
Sensible Capacity	.952	.963	.985	**1.00**	1.031	1.056
Heat of Rejection	.946	.967	.986	**1.00**	1.027	1.051
Power Input	.974	.981	.992	**1.00**	1.016	1.032

Figures in Bold Face Type are @ A.R.I. Rating Conditions.

Cooling Capacity Correction for Other Leaving Water Temperatures:

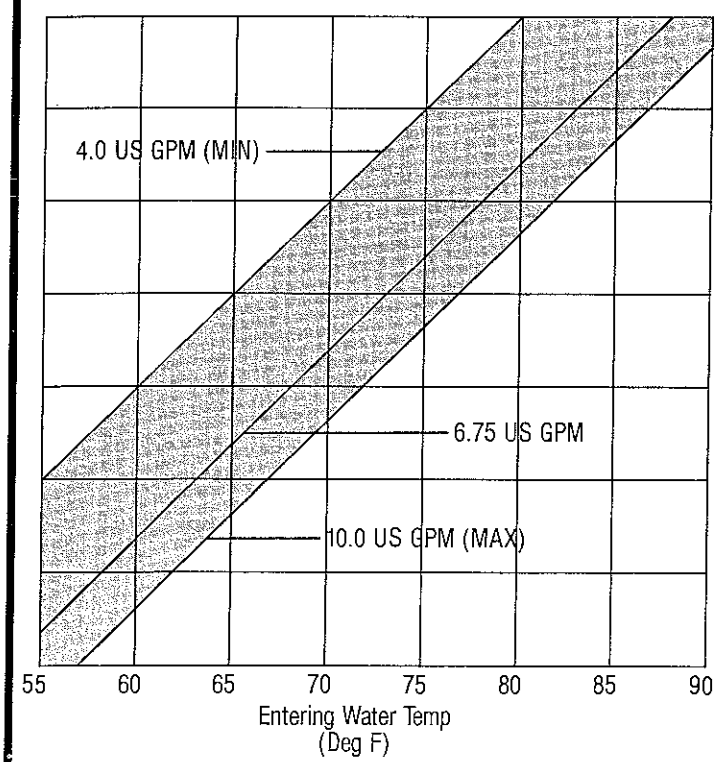

Leaving Water Temp. (Deg F)	Total & Sensible Mult.	Heat of Rejection Mult.	Power Input (watts)
100	.99/1.00	.99	3000
95	**1.00/1.00**	**1.00**	**2900**
90	1.01/1.00	1.00	2800
85	1.02/1.00	.99	2700
80	1.03/ .99	.99	2650
75	1.03/ .98	.98	2500
70	1.03/ .97	.98	2475
65	1.03/ .96	.98	2425

Heating Performance

Heating Capacity: 40500 Btuh, Power Input: 3200 Watts, C.O.P.: 3.7 (at A.R.I. Standard 320-86 Rating Conditions)

Multiplier for Effect of Variation in Entering Air Temperature:

Entering Air Temp. Deg. F.	55	60	65	**70**	75	80	85
Heating Capacity	1.032	1.025	1.012	**1.00**	.975	.951	.923
Heat of Absorption	1.084	1.057	1.028	**1.00**	.955	.904	.875
Power Input	.912	.938	.969	**1.00**	1.031	1.078	1.102

Multiplier for Effect of Variation in Air Flow:

Air Flow Rate, CFM	805	880	950	**1000**	1100	1230
Heating Capacity	.975	.983	.993	**1.00**	1.014	1.023
Heat of Absorption	.959	.974	.989	**1.00**	1.022	1.036
Power Input	1.009	1.006	1.003	**1.00**	.995	.992

Figures in Bold Face Type are @ A.R.I. Rating Conditions.

Heating Capacity Correction for Other Leaving Water Temperatures:

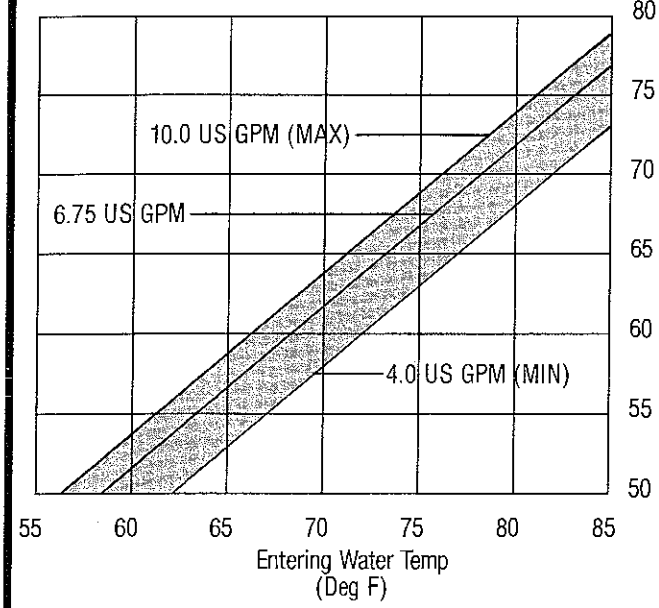

Leaving Water Temp. (Deg F)	Heating Capacity (Btuh)	Heat of Absorption (Btuh)	Power Input (Watts)
80	45100	33396	3400
75	44000	32566	3350
70	43000	31737	3300
65	41200	29999	3250
60	39500	28749	3150
55	37200	26790	3050
50	35800	25561	3000

Water Pressure Drop:

	A.R.I.	Typical Application Flow Rates:				
Rate, (GPM/12 MBTU)	**3.2**	1.6	2.2	2.7	3.5	4.0
Water Flow, (US GPM)	**8.0**	4.0	5.5	6.75	8.75	10.0
Pressure Drop, (Ft.) (H_2O)	**7.8**	1.8	3.5	5.3	8.9	11.6
		(min.)		(Recommended)		(max.)

Wiring Diagram

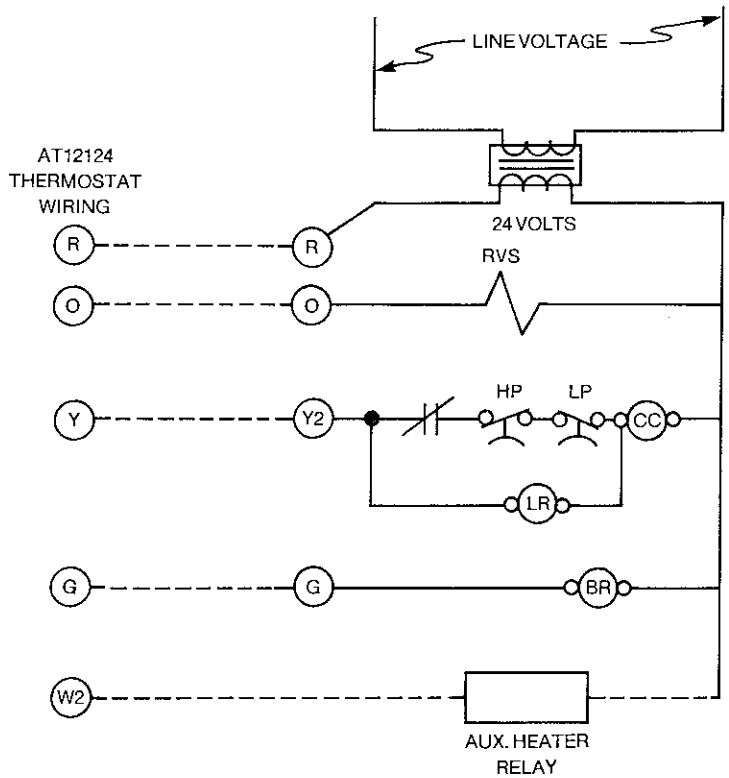

NOTES:
---- Field Wiring
Aux. Heater Relay is a field installed option.

ACO	=	AUTOMATIC CHANGEOVER RELAY	DL	=	DEMAND LIMIT RELAY	RVR	=	REVERSING VALVE RELAY
AS	=	ANTI-SHORT CYCLE RELAY	FS	=	FREEZESTAT	RVS	=	REVERSING VALVE SOLENOID
BM	=	BLOWER MOTOR	HL	=	HIGH LEVEL CONDENSATE SWITCH	SD	=	SHUTDOWN RELAY
BMC	=	BLOWER MOTOR CAPACITOR	HP	=	HIGH PRESSURE SWITCH	SLR	=	SPECIAL LOCKOUT RELAY
BR	=	BLOWER RELAY	HT	=	HIGH TEMPERATURE SWITCH	SSM	=	SAFETY SHUTDOWN MODULE
CC	=	COMPRESSOR CONTACTOR	LP	=	LOW PRESSURE SWITCH	TB	=	24-VOLT TERMINAL BLOCK
CCH	=	CRANKCASE HEATER	LR	=	LOCKOUT RELAY	TD	=	TIME DELAY RELAY
COMP	=	COMPRESSOR	OL	=	OVERLOAD	TR	=	TIMER RELAY
CPC	=	COMPRESSOR CAPACITOR	PR	=	PROGRAM RELAY	TRANS	=	LINE VOLTAGE TO 24-VOLT TRANSFORMER
CR	=	CONTROL RELAY	RS	=	RANDOM START RELAY	**NOTE**	=	*** (DENOTES AVAILABLE AS OPTION)**

Blower Performance

External Static Pressure (In wg)

Fan Speed	.1	.2	.3	.4	.5	.6	.7	.8	.9	1.0	Min. CFM
Hi	1230	1165	1100	1035	955	880					805
Lo	1110	1055	990	930	865	805					
Med	1020	965	910	850							

Blower Performance is based on wet coil and clean filter

ClimateMaster®
FORMERLY CHP CORP. AND FORMERLY
FRIEDRICH™ CLIMATE MASTER, INC.

2007 Beechgrove Place
Utica, New York 13501
(315) 724-7111 FAX: (315) 724-6945; TWX: 510-600-7973

Continuing engineering research results in steady improvements.
Therefore, these specifications are subject to change without notice.

© 1988 Climate Master Printed in U.S.A. 1/88

803 Series

Down Flow
Standard Operating Range
55°F to 95°F Entering Water Temp.

Size 036

Dimensions

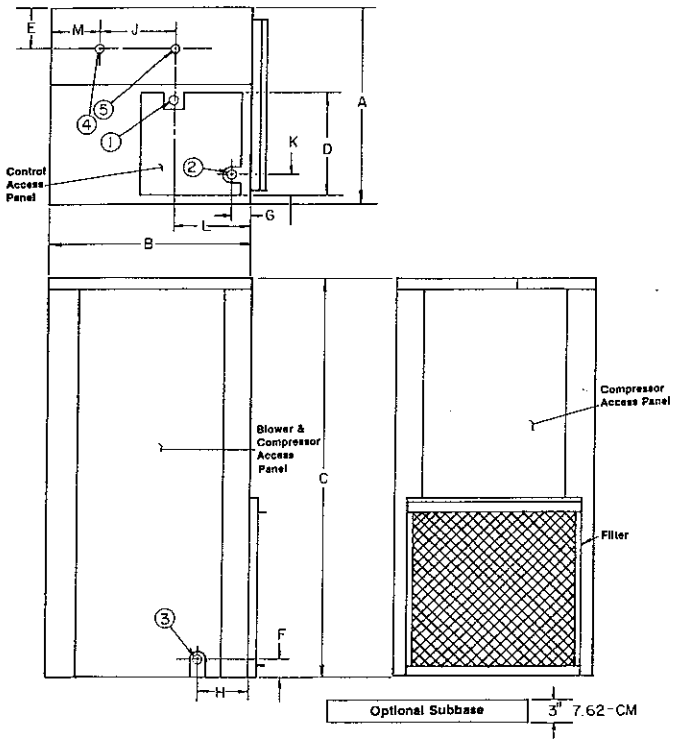

SZ.	A	B	C	D	E	F	G	H	J	K	L	M					
IN.	25 5/16	25 5/16	43 1/4	14 3/8	5 13/16	1 3/16	1 9/16	7 1/2	9 1/4	3	6 11/16	6 5/16					
CM.	64	64	110	37	15	3	4	19	23	8	17	16					

FILTER SIZE	24" x 24" x 1"	SHIPPING WGT.	248 lbs.
	61 x 61 x 2.5 CM		112 Kg

Air Flow Patterns

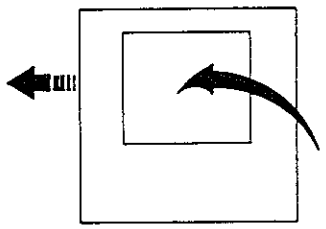

Front of unit

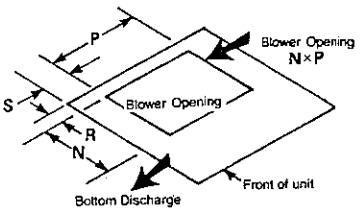

Electrical Data		Blower	Compressor		Min Ckt. Ampacity	Max. Fuse or HACR Size
Voltage	Phase	FLA	RLA	LRA		
208/230	1	3.2	15.5	78.0	22.6	35
265	1	3.2	14.1	73.8	20.8	30
208/230	3	3.2	10.6	59.5	16.5	25
460	3	1.8	4.6	30.7	7.6	15

ClimateMaster
FORMERLY CHP CORP. AND FORMERLY FRIEDRICH™ CLIMATE MASTER, INC.

2007 Beechgrove Place
Utica, New York 13501
(315) 724-7111

Cooling Performance

Total Cooling Capacity: 36000 Btuh, Power Input: 3200 Watts, E.E.R.: 11.3 (at A.R.I. Standard 320-86 Rating Conditions)

Effect of Variation in Entering Air Temperature:

(Based upon 1250 CFM & 95°F Leaving Water Temp)

Entering AIR (Deg F) Wet Bulb	Total Capacity (Btuh)	Sensible Capacity (Btuh) @ Entering Air (Deg F) Dry Bulb: 75	80	85	90	95	Heat of Rejection (Btuh)	Power Input (watts)
58	—	—	—	—	—	—	43450	3046
61	33804	28888	—	—	—	—	45420	3098
64	34884	24871	30590	—	—	—	46171	3149
67	**36000**	20881	**26600**	32319	38038	—	**46922**	**3200**
70	37152	16944	22663	28382	34101	35245	48001	3251
73	38304	—	18780	24499	30218	33702	48423	3302

Multiplier for Effect of Variation in Air Flow:

Air Flow Rate, CFM	1000	1200	**1250**	1300	1400	1500
Total Capacity	.973	.994	**1.00**	1.006	1.017	1.028
Sensible Capacity	.948	.988	**1.00**	1.012	1.037	1.062
Heat of Rejection	.963	.989	**1.00**	1.011	1.033	1.054
Power Input	.978	.994	**1.00**	1.006	1.019	1.032

Figures in Bold Face Type are @ A.R.I. Rating Conditions.

Cooling Capacity Correction for Other Leaving Water Temperatures:

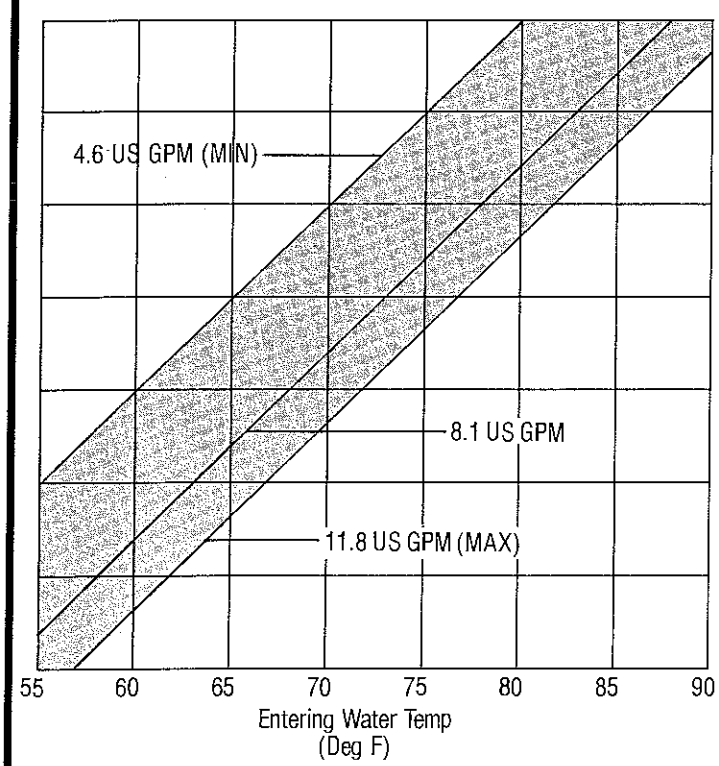

Leaving Water Temp. (Deg F)	Total & Sensible Mult.	Heat of Rejection Mult.	Power Input (watts)
100	.99/1.00	.99	3300
95	**1.00/1.00**	**1.00**	**3200**
90	1.01/1.00	1.00	3120
85	1.02/ .99	1.00	2980
80	1.02/ .98	.99	2920
75	1.03/ .98	.98	2880
70	1.03/ .97	.98	2720
65	1.03/ .97	.97	2640

Heating Performance

Heating Capacity: 42500 Btuh, Power Input: 3200 Watts, C.O.P.: 3.9 (at A.R.I. Standard 320-86 Rating Conditions)

Multiplier for Effect of Variation in Entering Air Temperature:

Entering Air Temp. Deg. F.	55	60	65	**70**	75	80	85
Heating Capacity	1.046	1.033	1.015	**1.00**	.987	.976	.964
Heat of Absorption	1.075	1.051	1.020	**1.00**	.975	.956	.935
Power Input	.966	.978	.989	**1.00**	1.011	1.022	1.03

Multiplier for Effect of Variation in Air Flow:

Air Flow Rate, CFM	1000	1200	**1250**	1300	1400	1500
Heating Capacity	.980	.994	**1.00**	1.006	1.017	1.028
Heat of Absorption	.969	.993	**1.00**	1.007	1.022	1.036
Power Input	.990	.998	**1.00**	1.002	1.005	1.008

Figures in Bold Face Type are @ A.R.I. Rating Conditions.

Heating Capacity Correction for Other Leaving Water Temperatures:

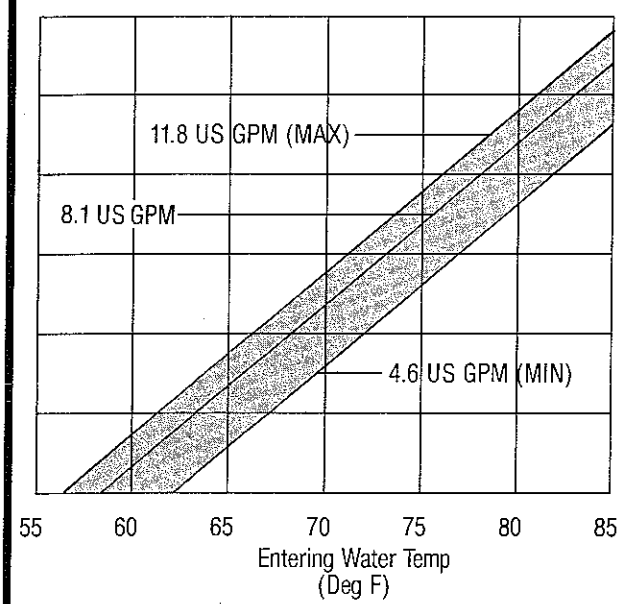

Leaving Water Temp. (Deg F)	Heating Capacity (Btuh)	Heat of Absorption (Btuh)	Power Input (Watts)
80	47500	35964	3380
75	46000	34532	3360
70	45000	33737	3300
65	43000	32010	3220
60	41500	30715	3160
55	39000	28556	3060
50	35200	25371	2880

Water Pressure Drop:

	A.R.I.	Typical Application Flow Rates:				
Rate, (GPM/12 MBTU)	**3.1**	1.5	2.2	2.7	3.2	3.9
Water Flow, (US GPM)	**9.4**	4.6	6.6	8.1	9.6	11.8
Pressure Drop, (Ft.) (H_2O)	**20.48**	14.33	17.16	19.01	20.69	22.95
		(min.)		(Recommended)		(max.)

Wiring Diagram

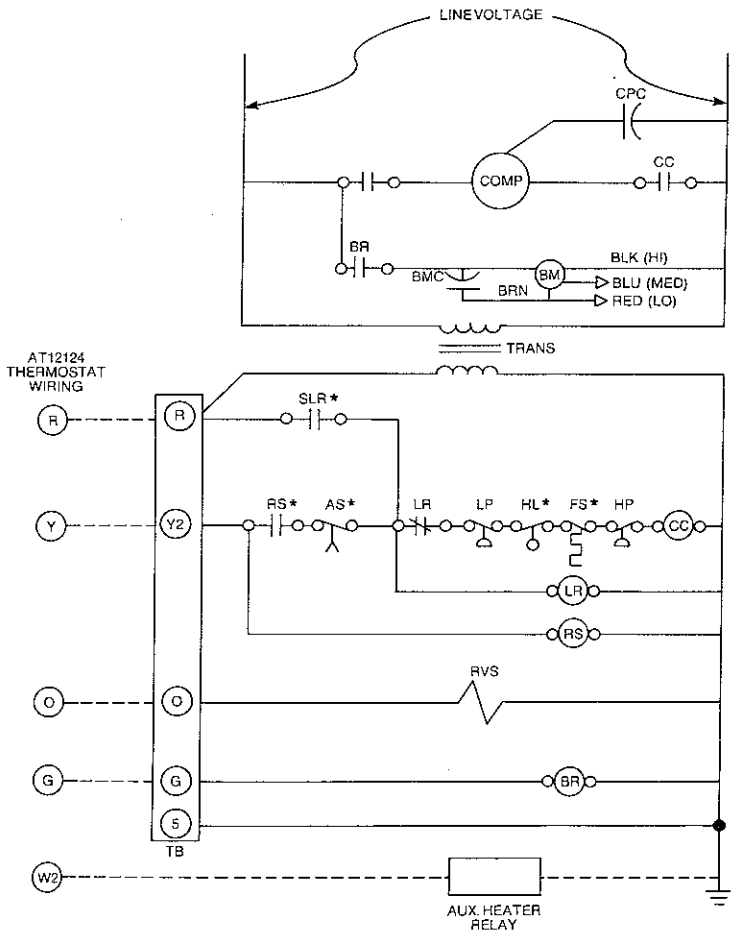

NOTES:
---- Field Wiring
Aux. Heater Relay is a field installed option.

ACO	=	AUTOMATIC CHANGEOVER RELAY	DL	=	DEMAND LIMIT RELAY	RVR	=	REVERSING VALVE RELAY
AS	=	ANTI-SHORT CYCLE RELAY	FS	=	FREEZESTAT	RVS	=	REVERSING VALVE SOLENOID
BM	=	BLOWER MOTOR	HL	=	HIGH LEVEL CONDENSATE SWITCH	SD	=	SHUTDOWN RELAY
BMC	=	BLOWER MOTOR CAPACITOR	HP	=	HIGH PRESSURE SWITCH	SLR	=	SPECIAL LOCKOUT RELAY
BR	=	BLOWER RELAY	HT	=	HIGH TEMPERATURE SWITCH	SSM	=	SAFETY SHUTDOWN MODULE
CC	=	COMPRESSOR CONTACTOR	LP	=	LOW PRESSURE SWITCH	TB	=	24-VOLT TERMINAL BLOCK
CCH	=	CRANKCASE HEATER	LR	=	LOCKOUT RELAY	TD	=	TIME DELAY RELAY
COMP	=	COMPRESSOR	OL	=	OVERLOAD	TR	=	TIMER RELAY
CPC	=	COMPRESSOR CAPACITOR	PR	=	PROGRAM RELAY	TRANS	=	LINE VOLTAGE TO 24-VOLT TRANSFORMER
CR	=	CONTROL RELAY	RS	=	RANDOM START RELAY	**NOTE**	=	*** (DENOTES AVAILABLE AS OPTION)**

Blower Performance

External Static Pressure (In wg)

Fan Speed	.1	.2	.3	.4	.5	.6	.7	.8	.9	1.0	Min. CFM
Hi	1500	1420	1340	1250	1170	1080					1000
Lo	1360	1310	1250	1190	1110	1000					
Med	1290	1240	1190	1120	1030						

Blower Performance is based on wet coil and clean filter

ClimateMaster®
FORMERLY CHP CORP. AND FORMERLY
FRIEDRICH™ CLIMATE MASTER, INC.

2007 Beechgrove Place
Utica, New York 13501
(315) 724-7111 FAX: (315) 724-6945; TWX: 510-600-7973

Continuing engineering research results in steady improvements.
Therefore, these specifications are subject to change without notice.

©1988 Climate Master Printed in U.S.A. 1/88

803 Series

Down Flow
Standard Operating Range
55°F to 95°F Entering Water Temp.

Size 042

Dimensions

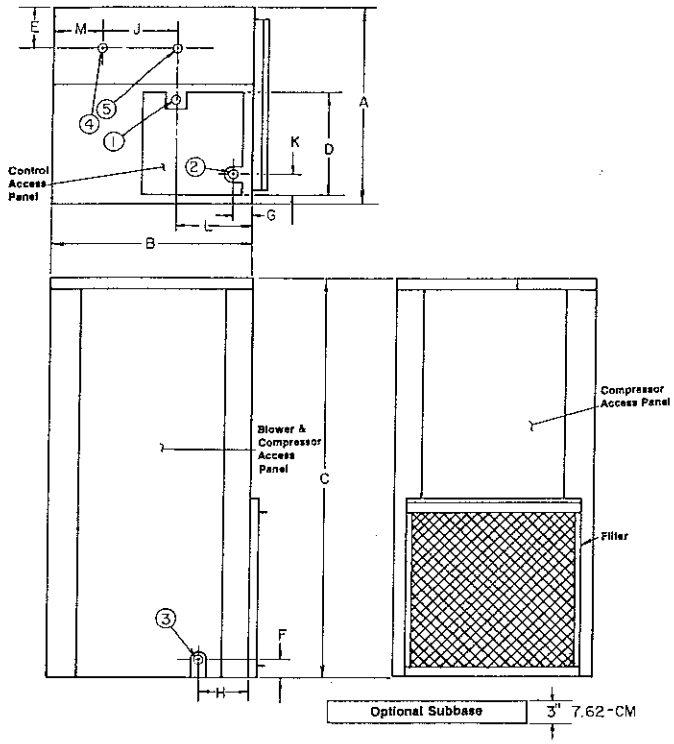

SZ.	A	B	C	D	E	F	G	H	J	K	L	M					
IN.	25 5/16	25 5/16	43 1/4	14 3/8	5 13/16	1 3/16	1 9/16	7 1/2	10 1/2	3	6 11/16	6 5/16					
CM.	64	64	110	37	15	3	4	19	27	8	17	16					

FILTER SIZE	24" x 24" x 1" / 61 x 61 x 2.5 CM	SHIPPING WGT.	278 lbs. / 126 Kg

Air Flow Patterns

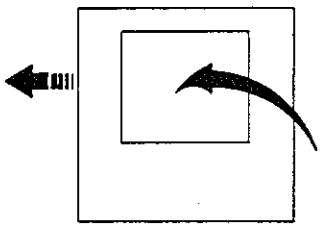

Front of unit

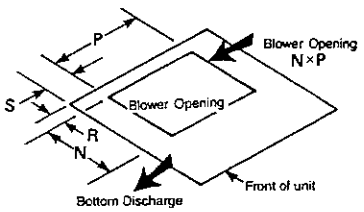

Electrical Data		Blower	Compressor		Min Ckt. Ampacity	Max. Fuse or HACR Size
Voltage	Phase	FLA	RLA	LRA		
208/230	1	3.2	17.6	88.0	25.2	40
208/230	3	3.2	11.5	65.1	17.6	25
460	3	1.8	5.1	32.8	8.2	15

ClimateMaster®
FORMERLY CHP CORP. AND FORMERLY FRIEDRICH™ CLIMATE MASTER, INC.

2007 Beechgrove Place
Utica, New York 13501
(315) 724-7111

Cooling Performance

Total Cooling Capacity: 41500 Btuh, Power Input: 3520 Watts, E.E.R.: 11.8 (at A.R.I. Standard 320-86 Rating Conditions)

Effect of Variation in Entering Air Temperature:

(Based upon 1500 CFM & 95°F Leaving Water Temp)

Entering AIR (Deg F) Wet Bulb	Total Capacity (Btuh)	Sensible Capacity (Btuh) @ Entering Air (Deg F) Dry Bulb: 75	80	85	90	95	Heat of Rejection (Btuh)	Power Input (watts)
58	35856	—	—	—	—	—	47520	3355
61	37848	33666	—	—	—	—	49500	3411
64	39840	28985	35650	—	—	—	52711	3467
67	**41500**	24335	**31000**	37665	44330	—	**53514**	**3520**
70	42869	19747	26412	33077	39742	42625	54317	3573
73	44114	15190	21886	28551	35216	36735	55173	3629

Multiplier for Effect of Variation in Air Flow:

Air Flow Rate, CFM	1260	1340	1450	**1500**	1700	1800
Total Capacity	.974	.985	.995	**1.00**	1.019	1.026
Sensible Capacity	.934	.967	.990	**1.00**	1.041	1.058
Heat of Rejection	.956	.971	.991	**1.00**	1.036	1.051
Power Input	.974	.983	.995	**1.00**	1.021	1.030

Figures in Bold Face Type are @ A.R.I. Rating Conditions.

Cooling Capacity Correction for Other Leaving Water Temperatures:

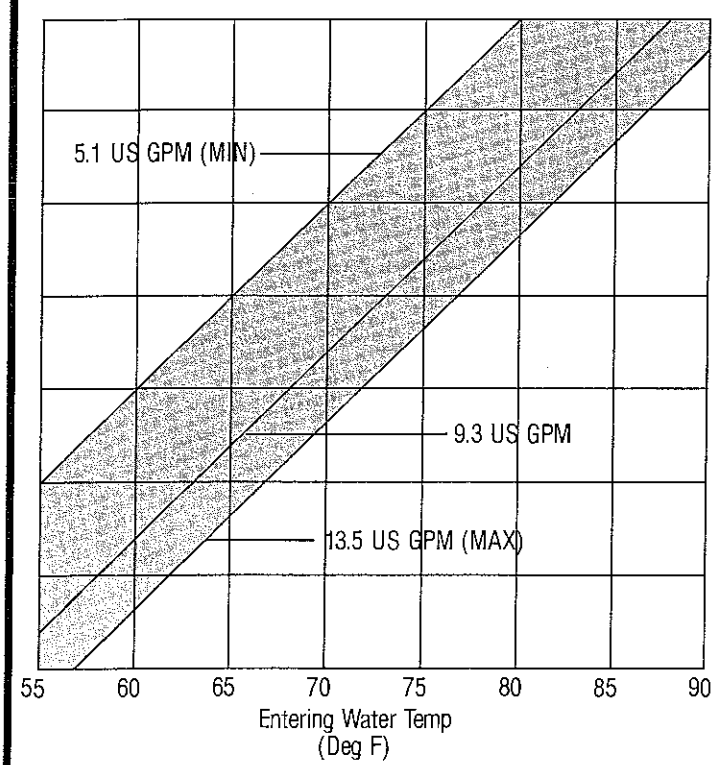

Leaving Water Temp. (Deg F)	Total & Sensible Mult.	Heat of Rejection Mult.	Power Input (watts)
100	.99/1.00	.99	3640
95	**1.00/1.00**	**1.00**	**3520**
90	1.01/1.00	1.00	3440
85	1.02/ .99	1.00	3280
80	1.02/ .99	.99	3220
75	1.03/ .98	.99	3080
70	1.03/ .98	.98	3000
65	1.03/ .97	.97	2900

Heating Performance

Heating Capacity: 44500 Btuh, Power Input: 3340 Watts, C.O.P.: 3.9 (at A.R.I. Standard 320-86 Rating Conditions)

Multiplier for Effect of Variation in Entering Air Temperature:

Entering Air Temp. Deg. F.	55	60	65	**70**	75	80	85
Heating Capacity	1.063	1.040	1.025	**1.00**	.965	.919	.862
Heat of Absorption	1.107	1.076	1.045	**1.00**	.937	.864	.823
Power Input	.900	.930	.965	**1.00**	1.035	1.070	1.102

Multiplier for Effect of Variation in Air Flow:

Air Flow Rate, CFM	1260	1340	1450	**1500**	1700	1800
Heating Capacity		.985	.995	**1.00**	1.019	1.026
Heat of Absorption		.980	.994	**1.00**	1.025	1.035
Power Input		.998	.999	**1.00**	1.003	1.004

Figures in Bold Face Type are @ A.R.I. Rating Conditions.

Heating Capacity Correction for Other Leaving Water Temperatures:

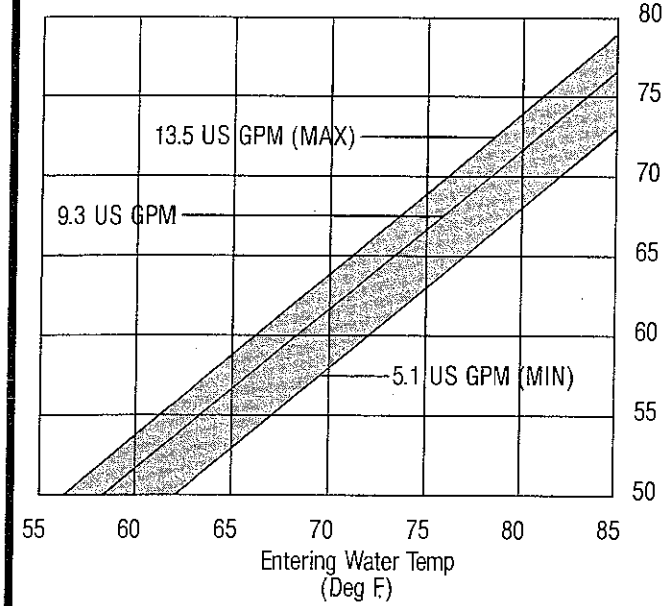

Leaving Water Temp. (Deg F)	Heating Capacity (Btuh)	Heat of Absorption (Btuh)	Power Input (Watts)
80	49500	37486	3520
75	48500	36623	3480
70	47000	35328	3420
65	45000	33532	3360
60	43500	32237	3300
55	41000	30147	3180
50	36600	26361	3000

Water Pressure Drop:

	A.R.I.	Typical Application Flow Rates:				
Rate, (GPM/12 MBTU)	**3.1**	1.5	2.2	2.7	3.5	3.9
Water Flow, (US GPM)	**10.7**	5.1	7.6	9.3	12.1	13.5
Pressure Drop, (Ft.) (H_2O)	**22.30**	5.88	12.92	20.78	30.14	33.89
		(min.)		(Recommended)		(max.)

Wiring Diagram

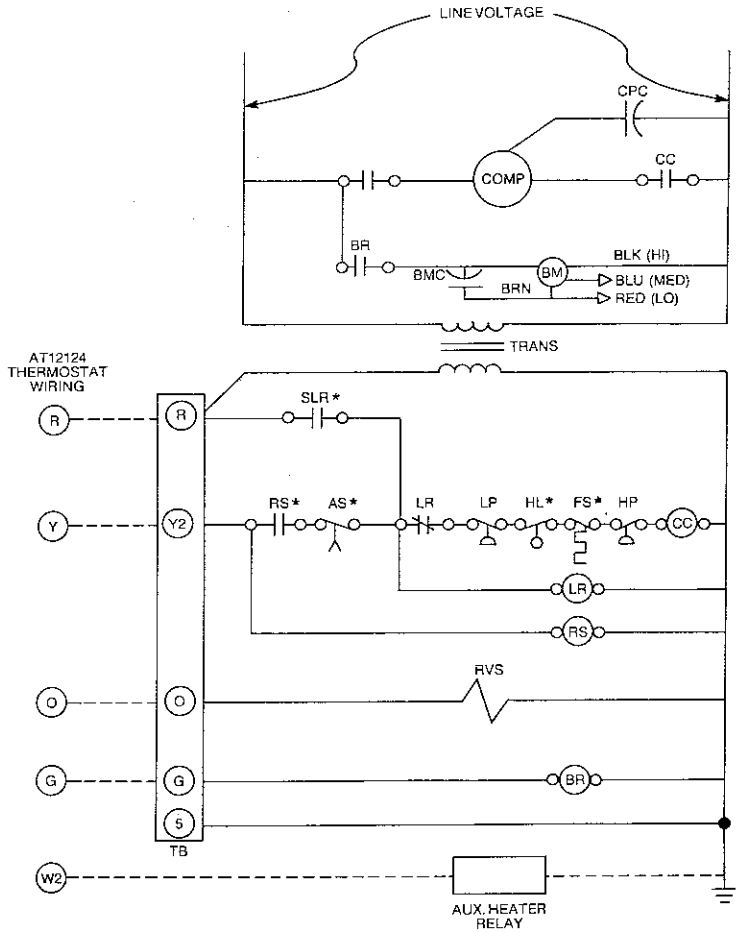

NOTES:
--- Field Wiring
Aux. Heater Relay is a field installed option.

ACO	=	AUTOMATIC CHANGEOVER RELAY	DL	=	DEMAND LIMIT RELAY	RVR	=	REVERSING VALVE RELAY
AS	=	ANTI-SHORT CYCLE RELAY	FS	=	FREEZESTAT	RVS	=	REVERSING VALVE SOLENOID
BM	=	BLOWER MOTOR	HL	=	HIGH LEVEL CONDENSATE SWITCH	SD	=	SHUTDOWN RELAY
BMC	=	BLOWER MOTOR CAPACITOR	HP	=	HIGH PRESSURE SWITCH	SLR	=	SPECIAL LOCKOUT RELAY
BR	=	BLOWER RELAY	HT	=	HIGH TEMPERATURE SWITCH	SSM	=	SAFETY SHUTDOWN MODULE
CC	=	COMPRESSOR CONTACTOR	LP	=	LOW PRESSURE SWITCH	TB	=	24-VOLT TERMINAL BLOCK
CCH	=	CRANKCASE HEATER	LR	=	LOCKOUT RELAY	TD	=	TIME DELAY RELAY
COMP	=	COMPRESSOR	OL	=	OVERLOAD	TR	=	TIMER RELAY
CPC	=	COMPRESSOR CAPACITOR	PR	=	PROGRAM RELAY	TRANS	=	LINE VOLTAGE TO 24-VOLT TRANSFORMER
CR	=	CONTROL RELAY	RS	=	RANDOM START RELAY	**NOTE**	=	*** (DENOTES AVAILABLE AS OPTION)**

Blower Performance

External Static Pressure (In wg)

Fan Speed	.1	.2	.3	.4	.5	.6	.7	.8	.9	1.0	Min. CFM
Hi	1780	1700	1620	1540	1440	1340					1260
Lo	1670	1610	1540	1460	1370	1260					
Med	1540	1500	1450	1400	1330						

Blower Performance is based on wet coil and clean filter

ClimateMaster®
FORMERLY CHP CORP. AND FORMERLY FRIEDRICH™ CLIMATE MASTER, INC.

2007 Beechgrove Place
Utica, New York 13501
(315) 724-7111 FAX: (315) 724-6945; TWX: 510-600-7973

Continuing engineering research results in steady improvements. Therefore, these specifications are subject to change without notice.

© 1988 Climate Master Printed in U.S.A. 1/88

813 Series

Standard Operating Range
55°F to 95°F Entering Water Temp.

Size 036

Dimensions

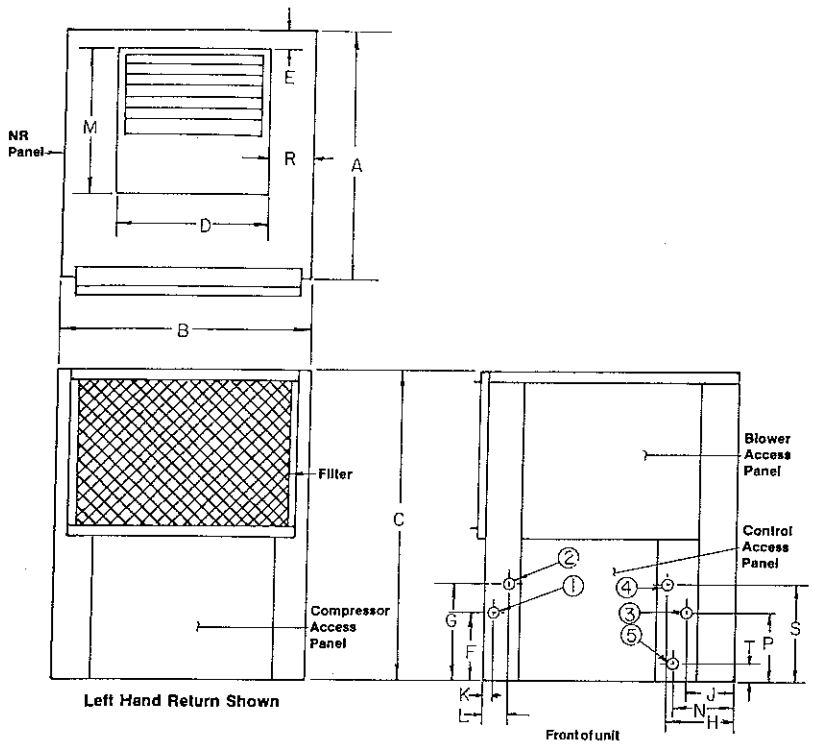

SZ.	A	B	C	D	E	F	G	H	J	K	L	M	N	P	R	S	T
IN.	25¼	25¼	42	11⅝	4¼	11	15	5⅜	4¼	1⅛	1⅝	12⅝	5	9¼	6¾	13¼	2
CM.	64	64	107	29	11	28	38	14	11	3	4	32	13	23	17	34	5

FILTER SIZE	24" x 24" x 1" 61 x 61 x 2.5 CM	SHIPPING WGT.	248 lbs. 112 Kg

Air Flow Patterns

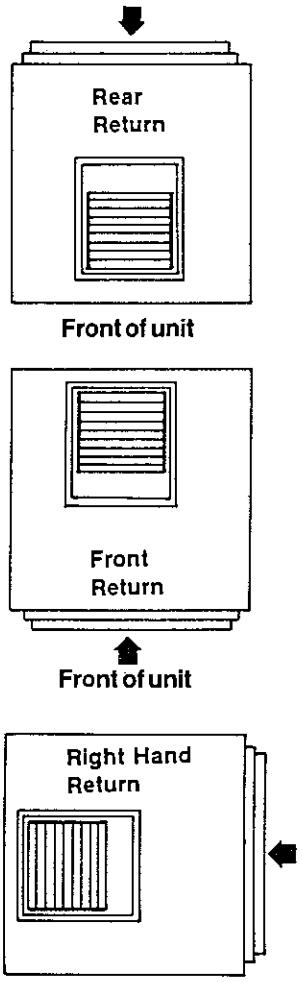

Electrical Data		Blower	Compressor		Min Ckt. Ampacity	Max. Fuse or HACR Size
Voltage	Phase	FLA	RLA	LRA		
208/230	1	3.2	15.5	78.0	22.6	35
265	1	3.2	14.1	73.8	20.8	30
208/230	3	3.2	10.6	59.5	16.5	25
460	3	1.8	4.6	30.7	7.6	15

ClimateMaster®
FORMERLY CHP CORP. AND FORMERLY FRIEDRICH™ CLIMATE MASTER, INC.

2007 Beechgrove Place
Utica, New York 13501
(315) 724-7111

Cooling Performance

Total Cooling Capacity: 36000 Btuh, Power Input: 3200 Watts, E.E.R.: 11.3 (at A.R.I. Standard 320-86 Rating Conditions)

Effect of Variation in Entering Air Temperature:

(Based upon 1250 CFM & 95°F Leaving Water Temp)

Entering AIR (Deg F) Wet Bulb	Total Capacity (Btuh)	Sensible Capacity (Btuh) @ Entering Air (Deg F) Dry Bulb: 75	80	85	90	95	Heat of Rejection (Btuh)	Power Input (watts)
58	—	—	—	—	—	—	43450	3046
61	33804	28888	—	—	—	—	45420	3098
64	34884	24871	30590	—	—	—	46171	3149
67	**36000**	20881	**26600**	32319	38038	—	**46922**	**3200**
70	37152	16944	22663	28382	34101	35245	48001	3251
73	38304	—	18780	24499	30218	33702	48423	3302

Multiplier for Effect of Variation in Air Flow:

Air Flow Rate, CFM	1000	1200	**1250**	1300	1400	1500
Total Capacity	.973	.994	**1.00**	1.006	1.017	1.028
Sensible Capacity	.948	.988	**1.00**	1.012	1.037	1.062
Heat of Rejection	.963	.989	**1.00**	1.011	1.033	1.054
Power Input	.978	.994	**1.00**	1.006	1.019	1.032

Figures in Bold Face Type are @ A.R.I. Rating Conditions.

Cooling Capacity Correction for Other Leaving Water Temperatures:

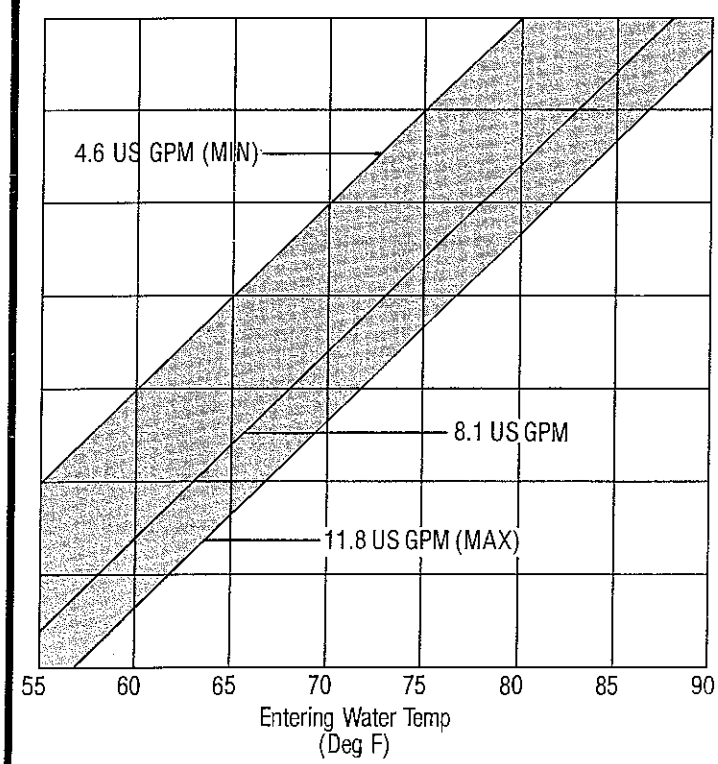

Leaving Water Temp. (Deg F)	Total & Sensible Mult.	Heat of Rejection Mult.	Power Input (watts)
100	.99/1.00	.99	3300
95	**1.00/1.00**	**1.00**	**3200**
90	1.01/1.00	1.00	3120
85	1.02/ .99	1.00	2980
80	1.02/ .98	.99	2920
75	1.03/ .98	.98	2880
70	1.03/ .97	.98	2720
65	1.03/ .97	.97	2640

Heating Performance

Heating Capacity: 42500 Btuh, Power Input: 3200 Watts, C.O.P.: 3.9 (at A.R.I. Standard 320-86 Rating Conditions)

Multiplier for Effect of Variation in Entering Air Temperature:

Entering Air Temp. Deg. F.	55	60	65	**70**	75	80	85
Heating Capacity	1.046	1.033	1.015	**1.00**	.987	.976	.964
Heat of Absorption	1.075	1.051	1.020	**1.00**	.975	.956	.935
Power Input	.966	.978	.989	**1.00**	1.011	1.022	1.03

Multiplier for Effect of Variation in Air Flow:

Air Flow Rate, CFM	1000	1200	**1250**	1300	1400	1500
Heating Capacity	.980	.994	**1.00**	1.006	1.017	1.028
Heat of Absorption	.969	.993	**1.00**	1.007	1.022	1.036
Power Input	.990	.998	**1.00**	1.002	1.005	1.008

Figures in Bold Face Type are @ A.R.I. Rating Conditions.

Heating Capacity Correction for Other Leaving Water Temperatures:

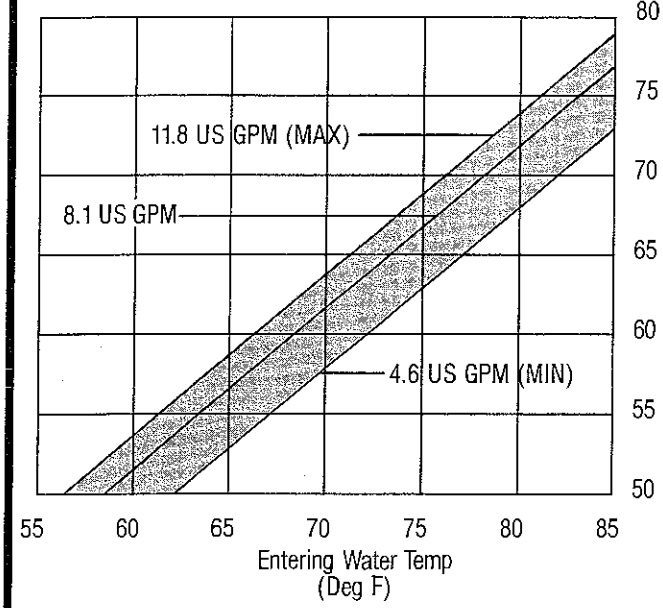

Leaving Water Temp. (Deg F)	Heating Capacity (Btuh)	Heat of Absorption (Btuh)	Power Input (Watts)
80	47500	35964	3380
75	46000	34532	3360
70	45000	33737	3300
65	43000	32010	3220
60	41500	30715	3160
55	39000	28556	3060
50	35200	25371	2880

Water Pressure Drop:

	A.R.I.	Typical Application Flow Rates:				
Rate, (GPM/12 MBTU)	**3.1**	1.5	2.2	2.7	3.2	3.9
Water Flow, (US GPM)	**9.4**	4.6	6.6	8.1	9.6	11.8
Pressure Drop, (Ft.) (H_2O)	**20.48**	14.33	17.16	19.01	20.69	22.95
		(min.)		(Recommended)		(max.)

Wiring Diagram

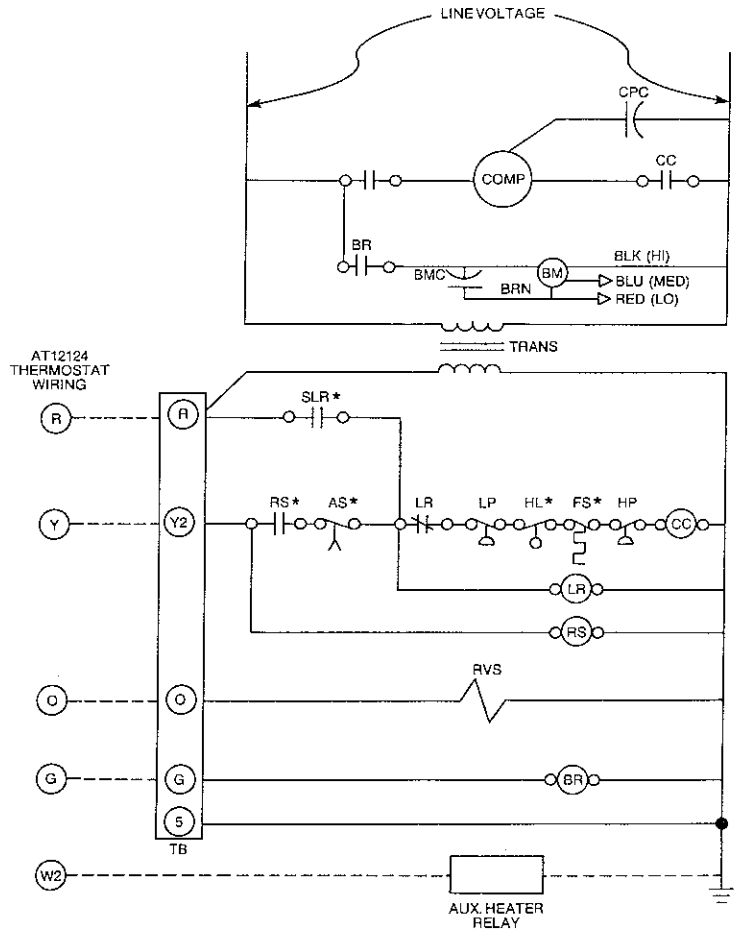

NOTES:
---- Field Wiring
Aux. Heater Relay is a field installed option.

ACO	=	AUTOMATIC CHANGEOVER RELAY	DL	=	DEMAND LIMIT RELAY	RVR	=	REVERSING VALVE RELAY
AS	=	ANTI-SHORT CYCLE RELAY	FS	=	FREEZESTAT	RVS	=	REVERSING VALVE SOLENOID
BM	=	BLOWER MOTOR	HL	=	HIGH LEVEL CONDENSATE SWITCH	SD	=	SHUTDOWN RELAY
BMC	=	BLOWER MOTOR CAPACITOR	HP	=	HIGH PRESSURE SWITCH	SLR	=	SPECIAL LOCKOUT RELAY
BR	=	BLOWER RELAY	HT	=	HIGH TEMPERATURE SWITCH	SSM	=	SAFETY SHUTDOWN MODULE
CC	=	COMPRESSOR CONTACTOR	LP	=	LOW PRESSURE SWITCH	TB	=	24-VOLT TERMINAL BLOCK
CCH	=	CRANKCASE HEATER	LR	=	LOCKOUT RELAY	TD	=	TIME DELAY RELAY
COMP	=	COMPRESSOR	OL	=	OVERLOAD	TR	=	TIMER RELAY
CPC	=	COMPRESSOR CAPACITOR	PR	=	PROGRAM RELAY	TRANS	=	LINE VOLTAGE TO 24-VOLT TRANSFORMER
CR	=	CONTROL RELAY	RS	=	RANDOM START RELAY	NOTE	=	* (DENOTES AVAILABLE AS OPTION)

Blower Performance

External Static Pressure (In wg)

Fan Speed	.1	.2	.3	.4	.5	.6	.7	.8	.9	1.0	Min. CFM
Hi	1500	1420	1340	1250	1170	1080					1000
Lo	1360	1310	1250	1190	1110	1000					
Med	1290	1240	1190	1120	1030						

Blower Performance is based on wet coil and clean filter

ClimateMaster®
FORMERLY CHP CORP. AND FORMERLY FRIEDRICH™ CLIMATE MASTER, INC.

2007 Beechgrove Place
Utica, New York 13501
(315) 724-7111 FAX: (315) 724-6945; TWX: 510-600-7973

Continuing engineering research results in steady improvements.
Therefore, these specifications are subject to change without notice.
© 1988 Climate Master Printed in U.S.A. 1/88

813 Series

Standard Operating Range
55°F to 95°F Entering Water Temp.

Size 042

Dimensions

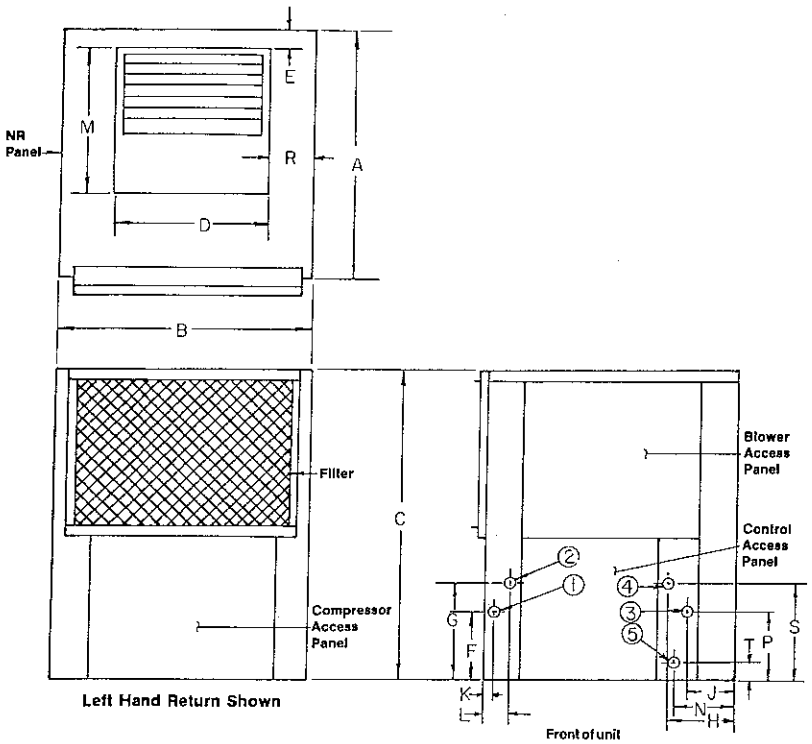

SZ.	A	B	C	D	E	F	G	H	J	K	L	M	N	P	R	S	T
IN.	25¼	25¼	42	12 13/16	1¾	11	15	5⅜	4¼	1⅛	1⅝	13 9/16	5	9¼	6	14½	2
CM.	64	64	107	32	5	28	38	14	11	3	4	35	13	23	15	37	5

FILTER SIZE	24" x 24" x 1"	SHIPPING WGT.	278 lbs.
	61 x 61 x 2.5 CM		126 Kg

Air Flow Patterns

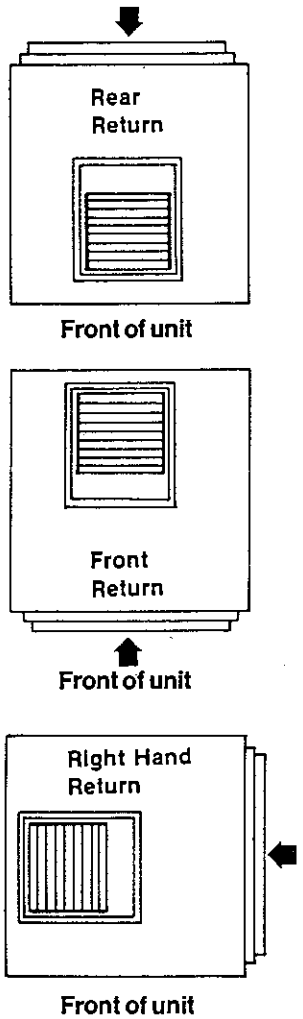

Electrical Data		Blower	Compressor		Min Ckt. Ampacity	Max. Fuse or HACR Size
Voltage	Phase	FLA	RLA	LRA		
208/230	1	3.2	17.6	88.0	25.2	40
208/230	3	3.2	11.5	65.1	17.6	25
460	3	1.8	5.1	32.8	8.2	15

ClimateMaster®
FORMERLY CHP CORP. AND FORMERLY FRIEDRICH™ CLIMATE MASTER, INC.

2007 Beechgrove Place
Utica, New York 13501
(315) 724-7111

Cooling Performance

Total Cooling Capacity: 41500 Btuh, Power Input: 3520 Watts, E.E.R.: 11.8 (at A.R.I. Standard 320-86 Rating Conditions)

Effect of Variation in Entering Air Temperature:

(Based upon 1500 CFM & 95°F Leaving Water Temp)

Entering AIR (Deg F) Wet Bulb	Total Capacity (Btuh)	Sensible Capacity (Btuh) @ Entering Air (Deg F) Dry Bulb: 75	80	85	90	95	Heat of Rejection (Btuh)	Power Input (watts)
58	35856	—	—	—	—	—	47520	3355
61	37848	33666	—	—	—	—	49500	3411
64	39840	28985	35650	—	—	—	52711	3467
67	**41500**	24335	**31000**	37665	44330	—	**53514**	**3520**
70	42869	19747	26412	33077	39742	42625	54317	3573
73	44114	15190	21886	28551	35216	36735	55173	3629

Multiplier for Effect of Variation in Air Flow:

Air Flow Rate, CFM	1260	1340	1450	**1500**	1700	1800
Total Capacity	.974	.985	.995	**1.00**	1.019	1.026
Sensible Capacity	.934	.967	.990	**1.00**	1.041	1.058
Heat of Rejection	.956	.971	.991	**1.00**	1.036	1.051
Power Input	.974	.983	.995	**1.00**	1.021	1.030

Figures in Bold Face Type are @ A.R.I. Rating Conditions.

Cooling Capacity Correction for Other Leaving Water Temperatures:

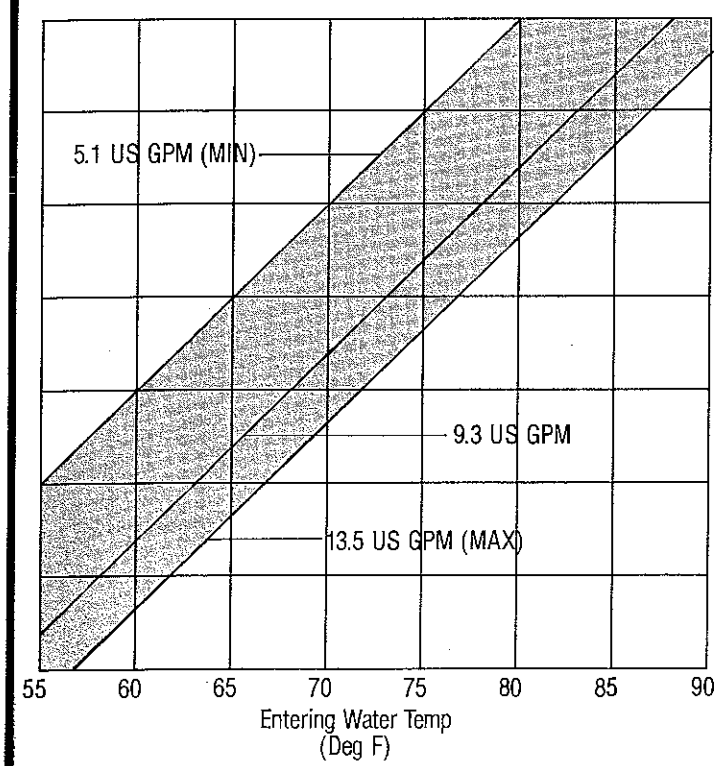

Leaving Water Temp. (Deg F)	Total & Sensible Mult.	Heat of Rejection Mult.	Power Input (watts)
100	.99/1.00	.99	3640
95	**1.00/1.00**	**1.00**	**3520**
90	1.01/1.00	1.00	3440
85	1.02/ .99	1.00	3280
80	1.02/ .99	.99	3220
75	1.03/ .98	.99	3080
70	1.03/ .98	.98	3000
65	1.03/ .97	.97	2900

Heating Performance

Heating Capacity: 44500 Btuh, Power Input: 3340 Watts, C.O.P.: 3.9 (at A.R.I. Standard 320-86 Rating Conditions)

Multiplier for Effect of Variation in Entering Air Temperature:

Entering Air Temp. Deg. F.	55	60	65	**70**	75	80	85
Heating Capacity	1.063	1.040	1.025	**1.00**	.965	.919	.862
Heat of Absorption	1.107	1.076	1.045	**1.00**	.937	.864	.823
Power Input	.900	.930	.965	**1.00**	1.035	1.070	1.102

Multiplier for Effect of Variation in Air Flow:

Air Flow Rate, CFM	1260	1340	1450	**1500**	1700	1800
Heating Capacity		.985	.995	**1.00**	1.019	1.026
Heat of Absorption		.980	.994	**1.00**	1.025	1.035
Power Input		.998	.999	**1.00**	1.003	1.004

Figures in Bold Face Type are @ A.R.I. Rating Conditions.

Heating Capacity Correction for Other Leaving Water Temperatures:

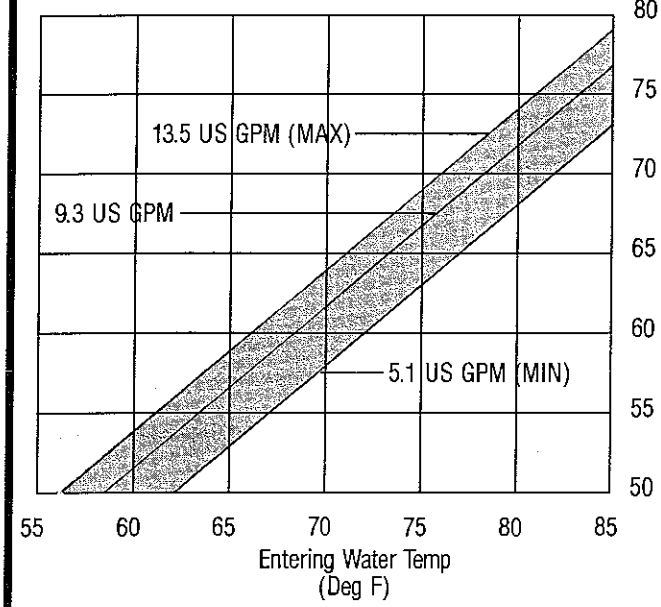

Leaving Water Temp. (Deg F)	Heating Capacity (Btuh)	Heat of Absorption (Btuh)	Power Input (Watts)
80	49500	37486	3520
75	48500	36623	3480
70	47000	35328	3420
65	45000	33532	3360
60	43500	32237	3300
55	41000	30147	3180
50	36600	26361	3000

Water Pressure Drop:

	A.R.I.	Typical Application Flow Rates:				
Rate, (GPM/12 MBTU)	**3.1**	1.5	2.2	2.7	3.5	3.9
Water Flow, (US GPM)	**10.7**	5.1	7.6	9.3	12.1	13.5
Pressure Drop, (Ft.) (H_2O)	**22.30**	5.88	12.92	20.78	30.14	33.89
		(min.)		(Recommended)		(max.)

Wiring Diagram

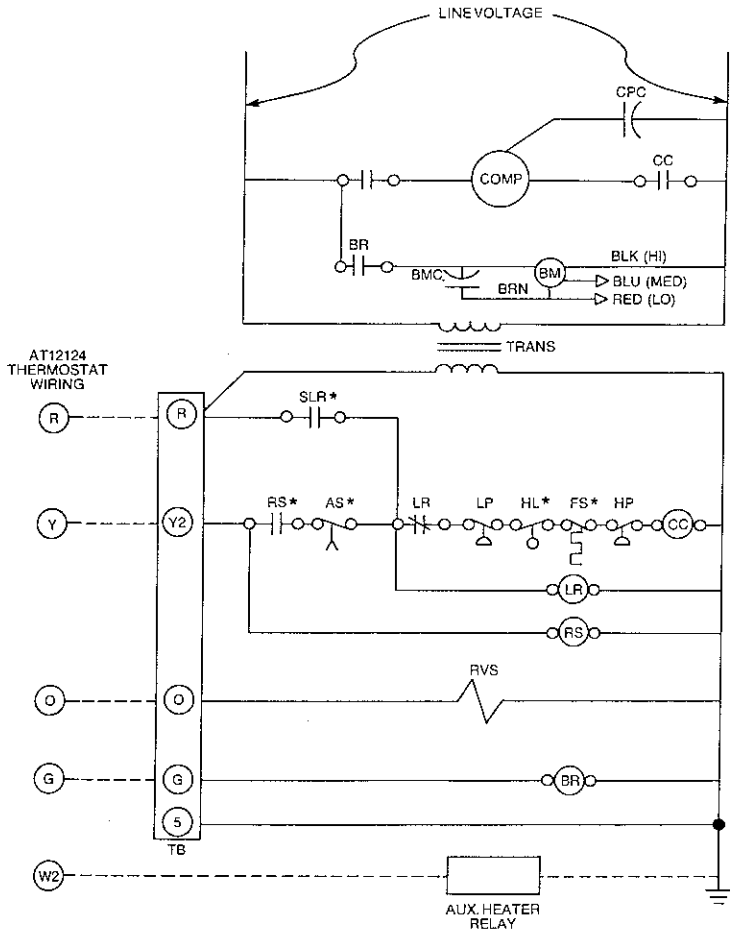

NOTES:
---- Field Wiring
Aux. Heater Relay is a field installed option.

ACO	=	AUTOMATIC CHANGEOVER RELAY
AS	=	ANTI-SHORT CYCLE RELAY
BM	=	BLOWER MOTOR
BMC	=	BLOWER MOTOR CAPACITOR
BR	=	BLOWER RELAY
CC	=	COMPRESSOR CONTACTOR
CCH	=	CRANKCASE HEATER
COMP	=	COMPRESSOR
CPC	=	COMPRESSOR CAPACITOR
CR	=	CONTROL RELAY
DL	=	DEMAND LIMIT RELAY
FS	=	FREEZESTAT
HL	=	HIGH LEVEL CONDENSATE SWITCH
HP	=	HIGH PRESSURE SWITCH
HT	=	HIGH TEMPERATURE SWITCH
LP	=	LOW PRESSURE SWITCH
LR	=	LOCKOUT RELAY
OL	=	OVERLOAD
PR	=	PROGRAM RELAY
RS	=	RANDOM START RELAY
RVR	=	REVERSING VALVE RELAY
RVS	=	REVERSING VALVE SOLENOID
SD	=	SHUTDOWN RELAY
SLR	=	SPECIAL LOCKOUT RELAY
SSM	=	SAFETY SHUTDOWN MODULE
TB	=	24-VOLT TERMINAL BLOCK
TD	=	TIME DELAY RELAY
TR	=	TIMER RELAY
TRANS	=	LINE VOLTAGE TO 24-VOLT TRANSFORMER
NOTE	=	*** (DENOTES AVAILABLE AS OPTION)**

Blower Performance

External Static Pressure (in wg)

Fan Speed	.1	.2	.3	.4	.5	.6	.7	.8	.9	1.0	Min. CFM
Hi	1780	1700	1620	1540	1440	1340					1260
Lo	1670	1610	1540	1460	1370	1260					
Med	1540	1500	1450	1400	1330						

Blower Performance is based on wet coil and clean filter

ClimateMaster®
FORMERLY CHP CORP. AND FORMERLY FRIEDRICH™ CLIMATE MASTER, INC.

2007 Beechgrove Place
Utica, New York 13501
(315) 724-7111 FAX: (315) 724-6945; TWX: 510-600-7973

Continuing engineering research results in steady improvements. Therefore, these specifications are subject to change without notice.

©1988 Climate Master Printed in U.S.A. 1/88

813 Series

Standard Operating Range
55°F to 95°F Entering Water Temp.

Size 048

Dimensions

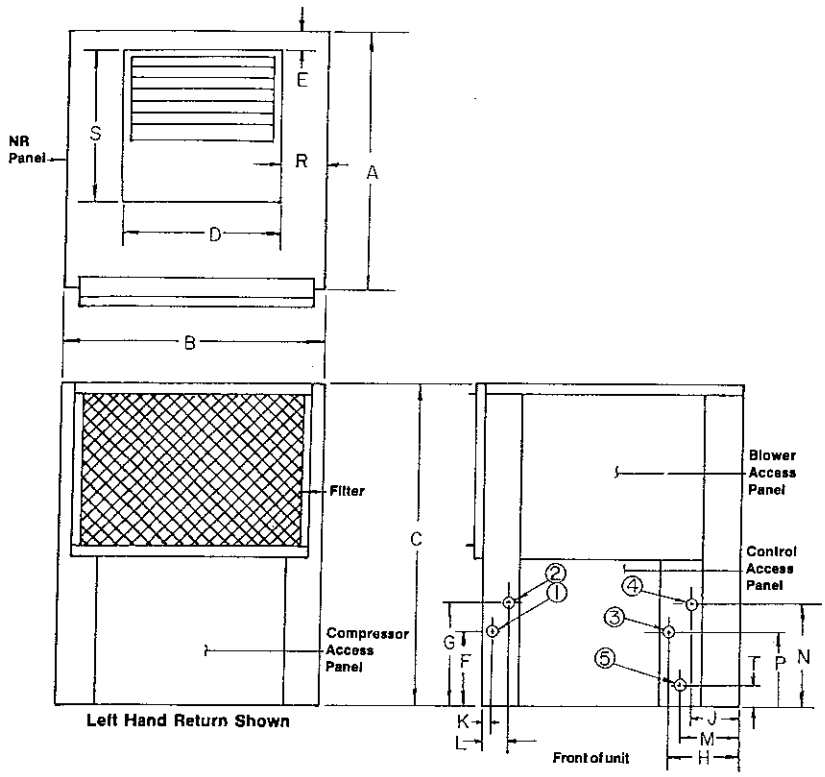

SZ.	A	B	C	D	E	F	G	H	J	K	L	M	N	P	R	S	T
IN.	28	28	43	15½	1½	11	15	5½	2⅝	1	1½	4¼	16 9/16	9½	6¼	14¾	1 9/16
CM.	71	71	109	39	4	28	38	14	6	2.5	4	11	42	24	16	37	4

FILTER SIZE	28" x 25" x 1"	SHIPPING WGT.	312 lbs.
	71 x 64 x 2.5 CM		142 Kg

Air Flow Patterns

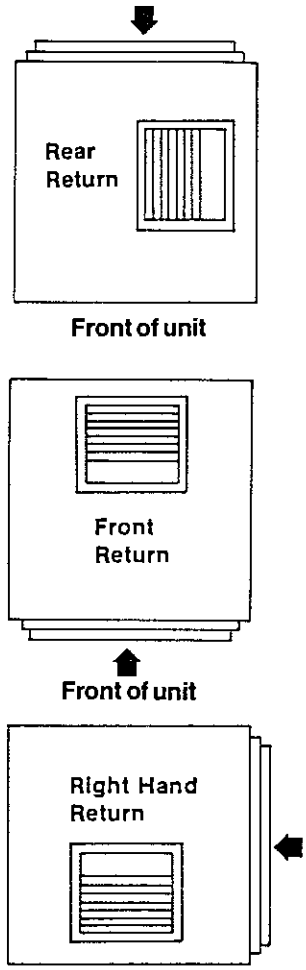

Electrical Data		Blower	Compressor		Min Ckt. Ampacity	Max. Fuse or HACR Size
Voltage	Phase	FLA	RLA	LRA		
208/230	1	5.4	21.5	95.4	32.3	50
208/230	3	5.4	13.8	82.0	22.7	35
460	3	2.2	6.9	41.0	10.9	15

ClimateMaster
FORMERLY CHP CORP. AND FORMERLY FRIEDRICH™ CLIMATE MASTER, INC.

2007 Beechgrove Place
Utica, New York 13501
(315) 724-7111

Cooling Performance

Total Cooling Capacity: 48500 Btuh, Power Input: 4300 Watts, E.E.R.: 11.3 (at A.R.I. Standard 320-86 Rating Conditions)

Effect of Variation in Entering Air Temperature:

(Based upon 1700 CFM & 95°F Leaving Water Temp)

Entering AIR (Deg F) Wet Bulb	Total Capacity (Btuh)	Sensible Capacity (Btuh) @ Entering Air (Deg F) Dry Bulb: 75	80	85	90	95	Heat of Rejection (Btuh)	Power Input (watts)
58	40788	—	—	—	—	—	53447	3892
61	43456	40834	—	—	—	—	56985	4029
64	46123	35156	43240	—	—	—	60523	4167
67	**48500**	29516	**37600**	45684	—	—	**63176**	**4300**
70	50585	23951	32035	40119	48203	49444	66019	4433
73	52429	18424	26546	34629	42714	43390	67977	4571

Multiplier for Effect of Variation in Air Flow:

Air Flow Rate, CFM	1400	1675	**1700**	1850	2050	2130
Total Capacity	.974	.998	**1.00**	1.012	1.029	1.035
Sensible Capacity	.940	.995	**1.00**	1.027	1.064	1.078
Heat of Rejection	.952	.996	**1.00**	1.024	1.056	1.069
Power Input	.976	.998	**1.00**	1.014	1.033	1.040

Figures in Bold Face Type are @ A.R.I. Rating Conditions.

Cooling Capacity Correction for Other Leaving Water Temperatures:

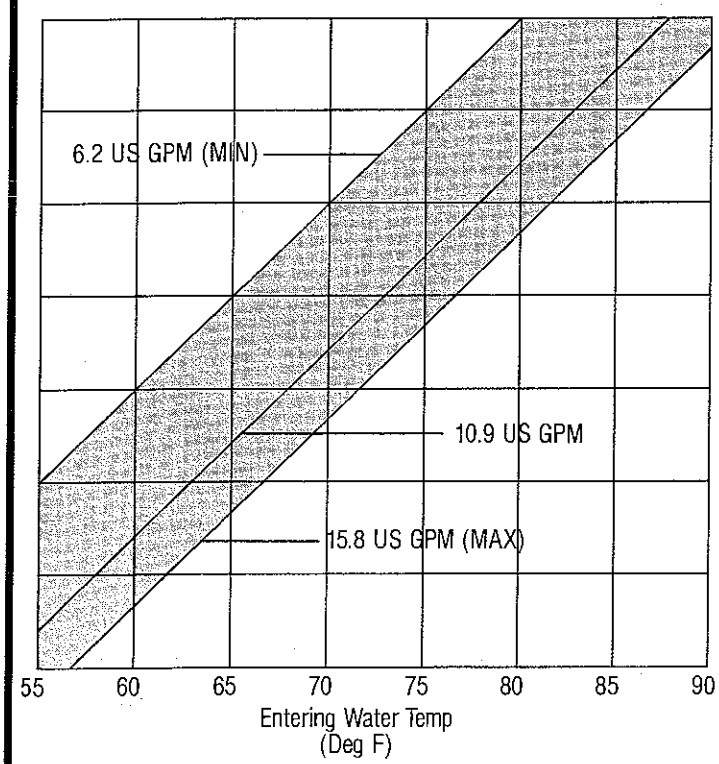

Leaving Water Temp. (Deg F)	Total & Sensible Mult.	Heat of Rejection Mult.	Power Input (watts)
100	.99/1.00	.99	4420
95	**1.00/1.00**	**1.00**	**4300**
90	1.01/1.00	1.00	4180
85	1.02/1.00	.99	4000
80	1.02/ .99	.99	3920
75	1.03/ .99	.98	3740
70	1.03/ .98	.97	3660
65	1.04/ .97	.96	3600

Heating Performance

Heating Capacity: 59000 Btuh, Power Input: 4560 Watts, C.O.P.: 3.8 (at A.R.I. Standard 320-86 Rating Conditions)

Multiplier for Effect of Variation in Entering Air Temperature:

Entering Air Temp. Deg. F.	55	60	65	70	75	80	85
Heating Capacity	1.01	1.007	1.004	**1.00**	.995	.989	.974
Heat of Absorption	1.035	1.024	1.013	**1.00**	.978	.967	.951
Power Input	.936	.953	.977	**1.00**	1.023	1.047	1.073

Multiplier for Effect of Variation in Air Flow:

Air Flow Rate, CFM	1400	1675	**1700**	1850	2050	2130
Heating Capacity	.976	.998	**1.00**	1.012	1.029	1.035
Heat of Absorption	.976	.998	**1.00**	1.015	1.035	1.043
Power Input	.988	.999	**1.00**	1.006	1.014	1.018

Figures in Bold Face Type are @ A.R.I. Rating Conditions.

Heating Capacity Correction for Other Leaving Water Temperatures:

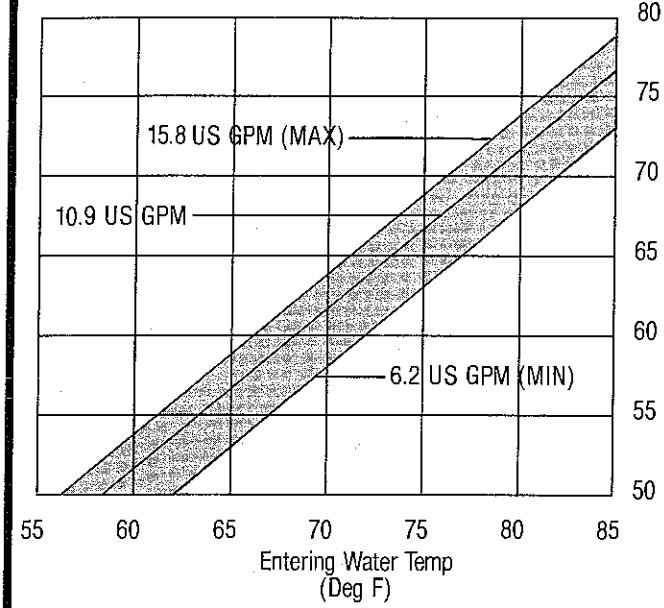

Leaving Water Temp. (Deg F)	Heating Capacity (Btuh)	Heat of Absorption (Btuh)	Power Input (Watts)
80	66000	49549	4820
75	64000	47754	4760
70	62500	46459	4700
65	59700	43868	4580
60	57500	42142	4500
55	54500	39688	4340
50	49000	35007	4100

Water Pressure Drop:

	A.R.I.	Typical Application Flow Rates:				
Rate, (GPM/12 MBTU)	**3.1**	1.5	2.2	2.7	3.5	3.9
Water Flow, (US GPM)	**12.6**	6.2	8.9	10.9	14.14	15.8
Pressure Drop, (Ft.) (H_2O)	**18.20**	5.08	8.67	13.02	21.9	27.35
		(min.)		(Recommended)		(max.)

Wiring Diagram

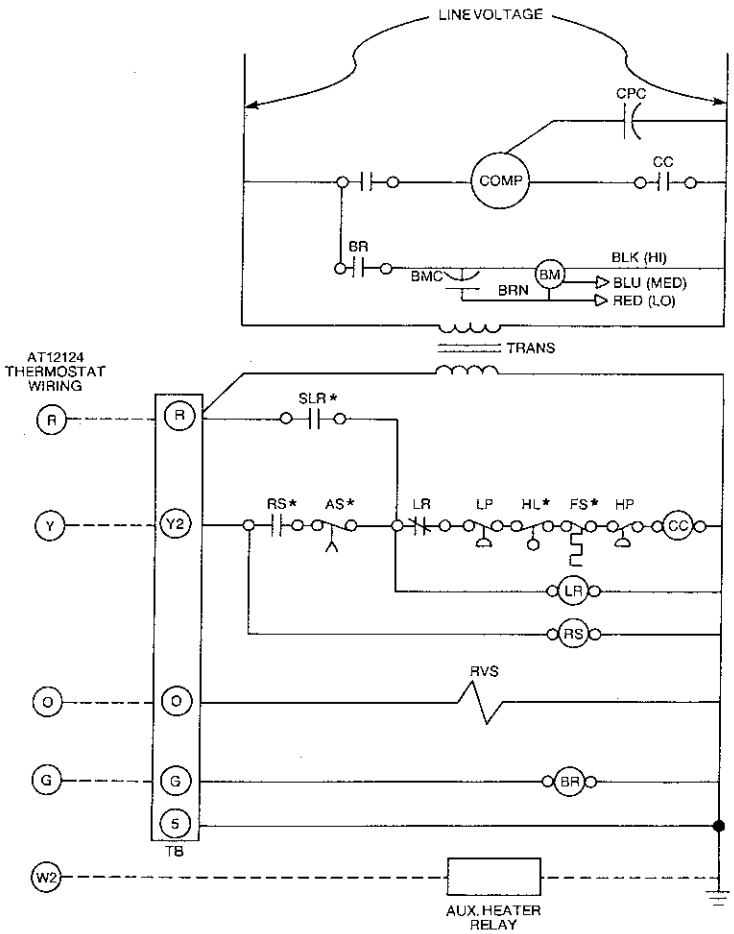

NOTES:
---- Field Wiring
Aux. Heater Relay is a field installed option.

ACO	=	AUTOMATIC CHANGEOVER RELAY	DL	=	DEMAND LIMIT RELAY	RVR	=	REVERSING VALVE RELAY
AS	=	ANTI-SHORT CYCLE RELAY	FS	=	FREEZESTAT	RVS	=	REVERSING VALVE SOLENOID
BM	=	BLOWER MOTOR	HL	=	HIGH LEVEL CONDENSATE SWITCH	SD	=	SHUTDOWN RELAY
BMC	=	BLOWER MOTOR CAPACITOR	HP	=	HIGH PRESSURE SWITCH	SLR	=	SPECIAL LOCKOUT RELAY
BR	=	BLOWER RELAY	HT	=	HIGH TEMPERATURE SWITCH	SSM	=	SAFETY SHUTDOWN MODULE
CC	=	COMPRESSOR CONTACTOR	LP	=	LOW PRESSURE SWITCH	TB	=	24-VOLT TERMINAL BLOCK
CCH	=	CRANKCASE HEATER	LR	=	LOCKOUT RELAY	TD	=	TIME DELAY RELAY
COMP	=	COMPRESSOR	OL	=	OVERLOAD	TR	=	TIMER RELAY
CPC	=	COMPRESSOR CAPACITOR	PR	=	PROGRAM RELAY	TRANS	=	LINE VOLTAGE TO 24-VOLT TRANSFORMER
CR	=	CONTROL RELAY	RS	=	RANDOM START RELAY	**NOTE**	=	*** (DENOTES AVAILABLE AS OPTION)**

Blower Performance

External Static Pressure (In wg)

Fan Speed	.1	.2	.3	.4	.5	.6	.7	.8	.9	1.0	Min. CFM
Hi	2130	2050	1960	1860	1750	1630					1400
Lo	1980	1900	1810	1720	1620	1520					
Med	1810	1730	1650	1570	1490	1400					

Blower Performance is based on wet coil and clean filter

ClimateMaster
FORMERLY CHP CORP. AND FORMERLY
FRIEDRICH™ CLIMATE MASTER, INC.

2007 Beechgrove Place
Utica, New York 13501
(315) 724-7111 FAX: (315) 724-6945; TWX: 510-600-7973

Continuing engineering research results in steady improvements.
Therefore, these specifications are subject to change without notice.

©1988 Climate Master Printed in U.S.A. 1/88

813 Series

Standard Operating Range
55°F to 95°F Entering Water Temp.

Size 060

Dimensions

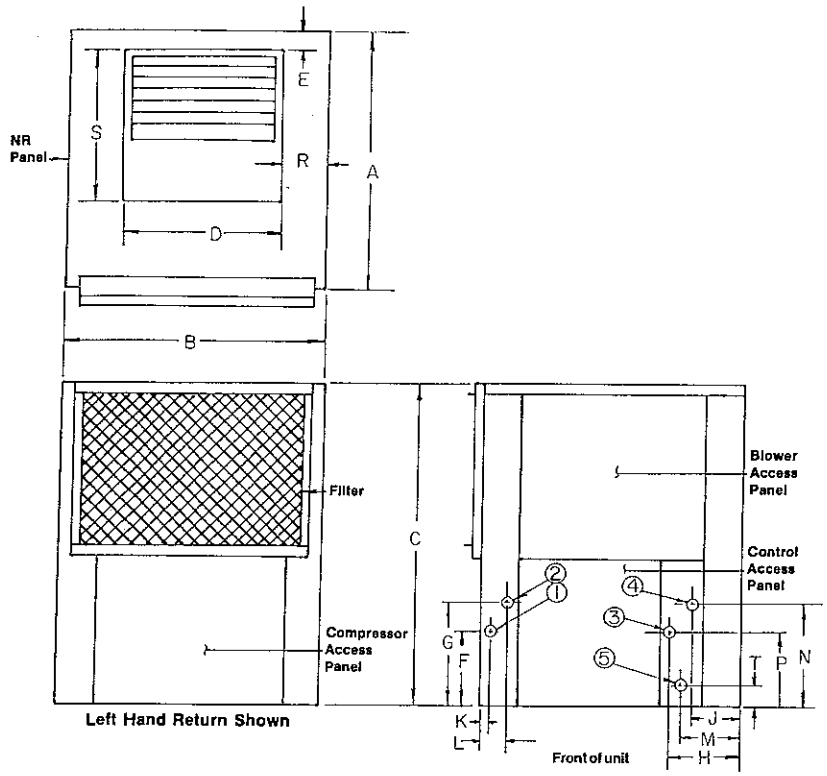

SZ.	A	B	C	D	E	F	G	H	J	K	L	M	N	P	R	S	T
IN.	28	28	43	15½	1½	11	15	5	3⅜	1	1½	5⅛	14⅞	9½	6¼	14¾	1 9/16
CM.	71	71	109	39	4	28	38	13	9	2.5	4	13	38	24	16	37	4

FILTER SIZE	28" x 25" x 1"	SHIPPING WGT.	339 lbs.
	71 x 64 x 2.5 CM		154 Kg

Air Flow Patterns

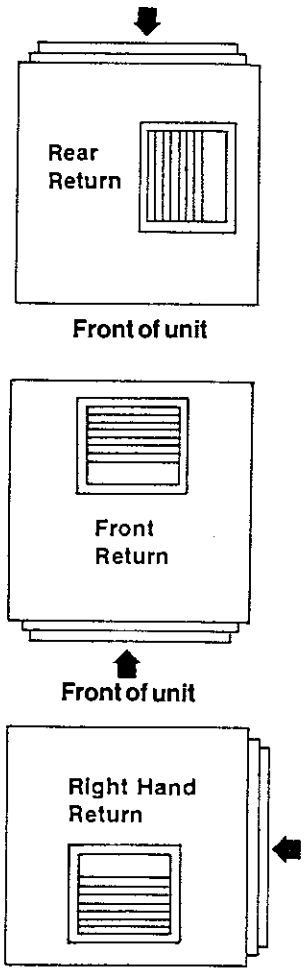

Electrical Data		Blower	Compressor		Min Ckt. Ampacity	Max. Fuse or HACR Size
Voltage	Phase	FLA	RLA	LRA		
208/230	1	5.8	27.6	125.0	40.3	60
208/230	3	5.8	16.1	90.0	26.0	40
460	3	2.6	7.7	45.0	12.3	20

ClimateMaster®
FORMERLY CHP CORP. AND FORMERLY FRIEDRICH™ CLIMATE MASTER, INC.

2007 Beechgrove Place
Utica, New York 13501
(315) 724-7111

Cooling Performance

Total Cooling Capacity: 63000 Btuh, Power Input: 5500 Watts, E.E.R.: 11.5 (at A.R.I. Standard 320-86 Rating Conditions)

Effect of Variation in Entering Air Temperature:

(Based upon 2000 CFM & 95°F Leaving Water Temp)

Entering AIR (Deg F) Wet Bulb	Total Capacity (Btuh)	Sensible Capacity (Btuh) @ Entering Air (Deg F) Dry Bulb: 75	80	85	90	95	Heat of Rejection (Btuh)	Power Input (watts)
58	55125	—	—	—	—	—	71550	—
61	56448	51585	—	—	—	—	74004	5264
64	59913	44413	54625	—	—	—	78010	5385
67	**63000**	37288	**47500**	57712	—	—	**81772**	**5500**
70	65709	30258	40470	50683	57095	—	84961	5615
73	68103	—	33535	33535	53960	62462	87987	5737

Multiplier for Effect of Variation in Air Flow:

Air Flow Rate, CFM	1700	1900	1950	**2000**	2080	2140
Total Capacity	.977	.993	.997	**1.00**	1.006	1.010
Sensible Capacity	.957	.985	.992	**1.00**	1.012	1.022
Heat of Rejection	.958	.986	.993	**1.00**	1.011	1.019
Power Input	.976	.992	.996	**1.00**	1.006	1.011

Figures in Bold Face Type are @ A.R.I. Rating Conditions.

Cooling Capacity Correction for Other Leaving Water Temperatures:

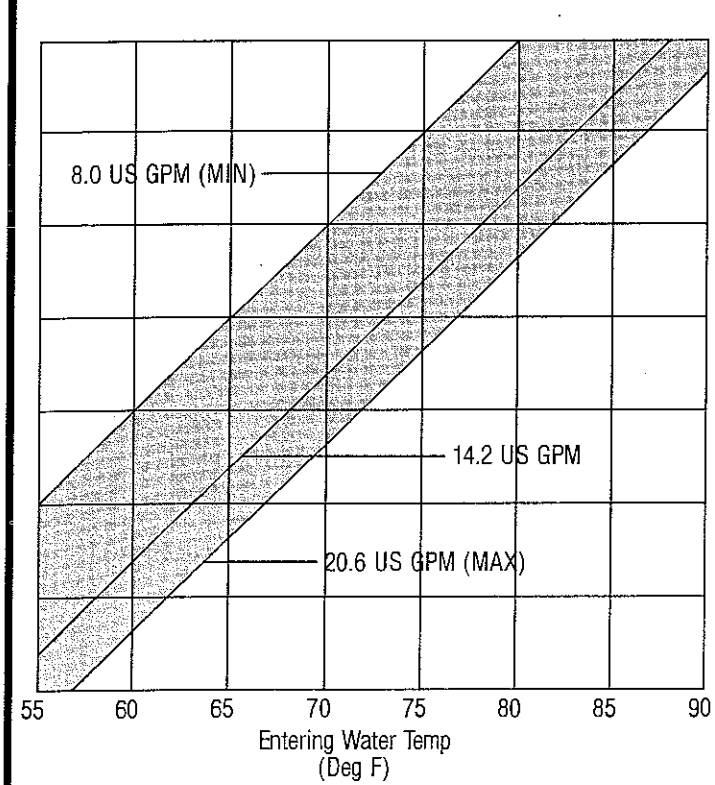

Leaving Water Temp. (Deg F)	Total & Sensible Mult.	Heat of Rejection Mult.	Power Input (watts)
100	.98/1.00	.99	5650
95	**1.00/1.00**	**1.00**	**5500**
90	1.00/1.00	.99	5350
85	1.02/1.00	.99	5100
80	1.02/ .99	.99	4980
75	1.03/ .98	.99	4760
70	1.03/ .98	.99	4660
65	1.03/ .98	.98	4550

Heating Performance

Heating Capacity: 78000 Btuh, Power Input: 5850 Watts, C.O.P.: 3.9 (at A.R.I. Standard 320-86 Rating Conditions)

Multiplier for Effect of Variation in Entering Air Temperature:

Entering Air Temp. Deg. F.	55	60	65	**70**	75	80	85
Heating Capacity	1.026	1.013	1.007	**1.00**	.994	.987	.976
Heat of Absorption	1.051	1.034	1.017	**1.00**	.982	.965	.941
Power Input	.940	.951	.975	**1.00**	1.025	1.049	1.073

Multiplier for Effect of Variation in Air Flow:

Air Flow Rate, CFM	1700	1900	1950	**2000**	2080	2140
Heating Capacity	.977	.993	.997	**1.00**	1.006	1.010
Heat of Absorption	.971	.991	.996	**1.00**	1.007	1.012
Power Input	.994	.998	.999	**1.00**	1.002	1.004

Figures in Bold Face Type are @ A.R.I. Rating Conditions.

Heating Capacity Correction for Other Leaving Water Temperatures:

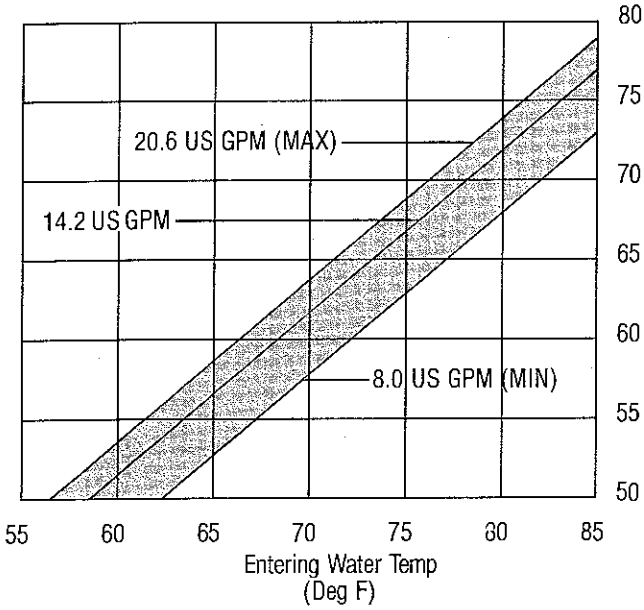

Leaving Water Temp. (Deg F)	Heating Capacity (Btuh)	Heat of Absorption (Btuh)	Power Input (Watts)
80	87000	65839	6200
75	85000	64181	6100
70	82000	61351	6050
65	79500	58900	5900
60	76000	56205	5800
55	72000	52887	5600
50	64750	46600	5250

Water Pressure Drop:

	A.R.I.	Typical Application Flow Rates:				
Rate, (GPM/12 MBTU)	**3.1**	1.5	2.2	2.7	3.5	3.9
Water Flow, (US GPM)	**16.4**	8.0	11.5	14.2	18.4	20.6
Pressure Drop, (Ft.) (H_2O)	**12.77**	3.51	5.99	9.15	15.35	19.25
		(min.)		(Recommended)		(max.)

Wiring Diagram

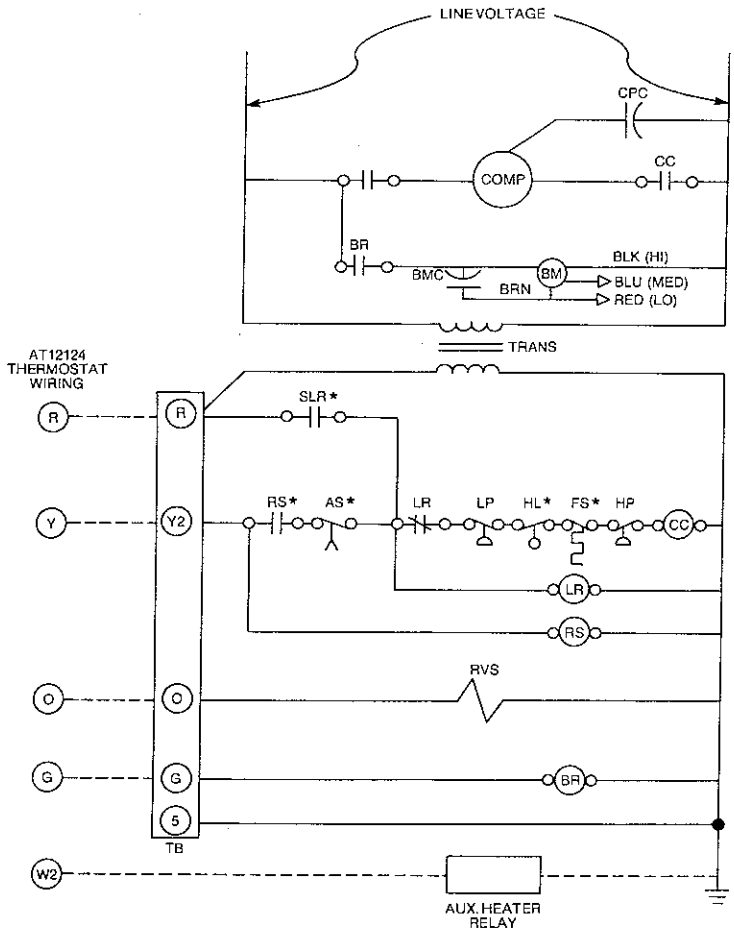

NOTES:
---- Field Wiring
Aux. Heater Relay is a field installed option.

ACO	=	AUTOMATIC CHANGEOVER RELAY
AS	=	ANTI-SHORT CYCLE RELAY
BM	=	BLOWER MOTOR
BMC	=	BLOWER MOTOR CAPACITOR
BR	=	BLOWER RELAY
CC	=	COMPRESSOR CONTACTOR
CCH	=	CRANKCASE HEATER
COMP	=	COMPRESSOR
CPC	=	COMPRESSOR CAPACITOR
CR	=	CONTROL RELAY
DL	=	DEMAND LIMIT RELAY
FS	=	FREEZESTAT
HL	=	HIGH LEVEL CONDENSATE SWITCH
HP	=	HIGH PRESSURE SWITCH
HT	=	HIGH TEMPERATURE SWITCH
LP	=	LOW PRESSURE SWITCH
LR	=	LOCKOUT RELAY
OL	=	OVERLOAD
PR	=	PROGRAM RELAY
RS	=	RANDOM START RELAY
RVR	=	REVERSING VALVE RELAY
RVS	=	REVERSING VALVE SOLENOID
SD	=	SHUTDOWN RELAY
SLR	=	SPECIAL LOCKOUT RELAY
SSM	=	SAFETY SHUTDOWN MODULE
TB	=	24-VOLT TERMINAL BLOCK
TD	=	TIME DELAY RELAY
TR	=	TIMER RELAY
TRANS	=	LINE VOLTAGE TO 24-VOLT TRANSFORMER
NOTE	=	*** (DENOTES AVAILABLE AS OPTION)**

Blower Performance

External Static Pressure (In wg)

Fan Speed	.1	.2	.3	.4	.5	.6	.7	.8	.9	1.0	Min. CFM
Hi	2200	2140	2080	2010	1940	1860					1700
Lo	2110	2050	2000	1940	1870	1800					
Med	2060	2000	1940	1880	1820	1760	1700				

Blower Performance is based on wet coil and clean filter

ClimateMaster®
FORMERLY CHP CORP. AND FORMERLY
FRIEDRICH™ CLIMATE MASTER, INC.

2007 Beechgrove Place
Utica, New York 13501
(315) 724-7111 FAX: (315) 724-6945; TWX: 510-600-7973

Continuing engineering research results in steady improvements.
Therefore, these specifications are subject to change without notice.

©1988 Climate Master Printed in U.S.A. 1/88