SPECIFICATIONS

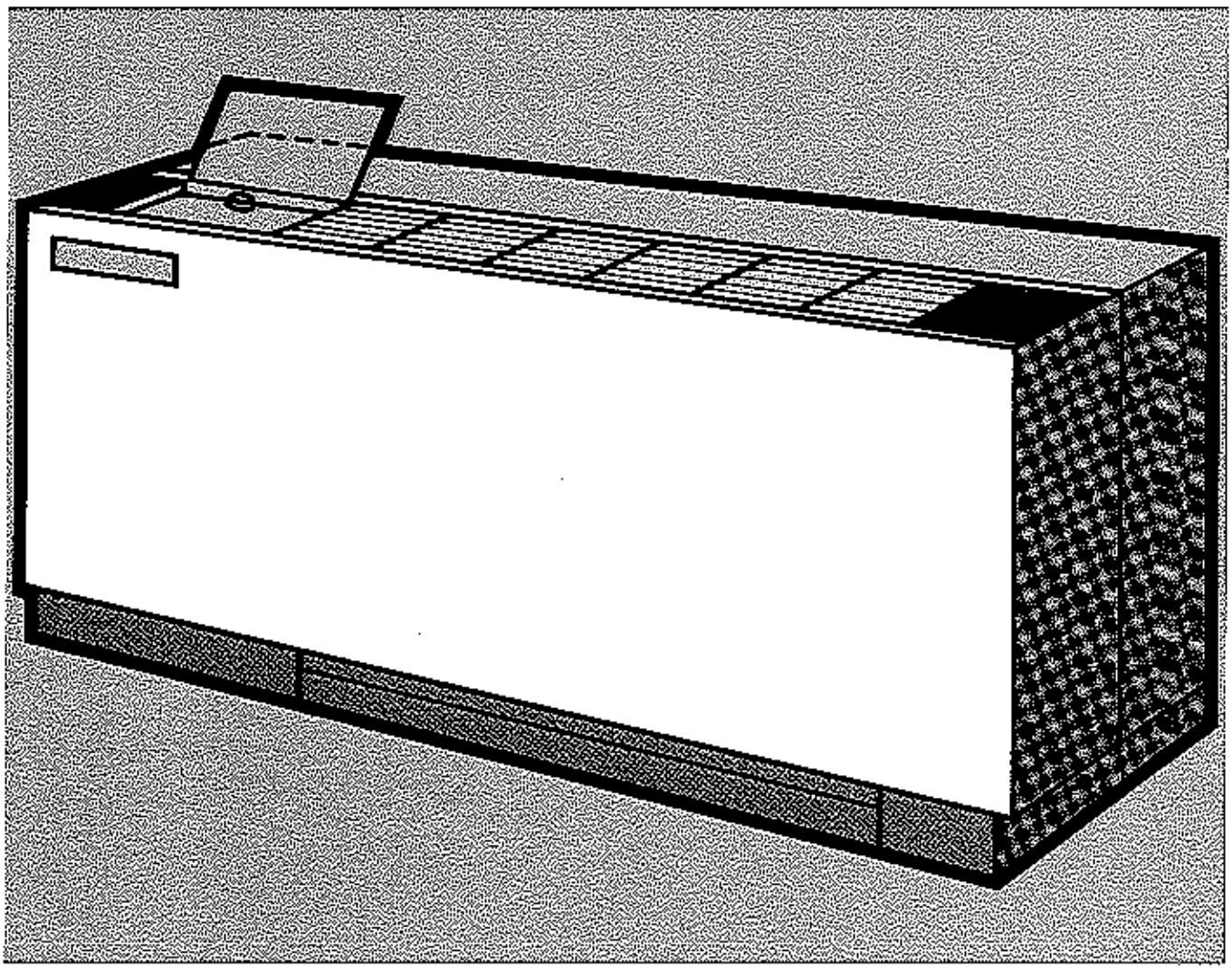

Climate Master 801 SERIES

CONSOLE WATER-TO-AIR HEAT PUMPS

Friedrich
Climate Master®

ARI RATINGS

801 SERIES—ARI RATED PERFORMANCE DATA—COOLING								ARI RATED PERFORMANCE DATA—HEATING					
Model Number	Net BTUH	Sensible	Input Watts	EER Rating	Heat of Reject.	Water GPM	Air CFM	Net BTUH	Input Watts	COP	Heat of Absorp.	Water GPM	Air CFM
801-08	7900	6280	760	10.4	10495	2.1	350	9400	775	3.6	6755	2.1	390
801-10	10000	7700	915	10.9	13125	2.6	385	11700	960	3.6	8425	2.6	415
801-12	12100	8955	1150	10.5	16025	3.2	375	14000	1220	3.6	10835	3.2	440
801-15	14900	11175	1400	10.6	19680	3.9	515	17100	1400	3.6	12320	3.9	540
801-19	19000	13395	1700	11.2	24802	4.8	545	21200	1725	3.6	15315	4.8	575

NOTE: The above is based on 80°F DB/67°F WB entering air 85°F EWT/95°F LWT —ARI Standard 320

NOTE: The above is based on 70°F DB entering air 70°F EWT—ARI Standard 320

GENERAL DATA CHART

Model Number	Voltages 1 Phase	Min Wire	Max Amps	Comp LRA	Comp RLA	Blower FLA	Total FLA	H Speed CFM	L Speed CFM	H Speed RPM	L Speed RPM	Blower HP	Shipping Wt Lbs
801-08	208/230 265	#14	15	22.4 19.0	3.5 3.0	.45 .45	4.0 3.5	350	320	1040	1000	1/20	178
801-10	208/230 265	#14	15	21.3 22.3	4.4 3.9	.45 .45	4.9 4.4	385	355	1010	990	1/20	180
801-12	208/230 265	#14	15	28.0 27.4	5.7 5.0	.45 .45	6.2 5.5	375	350	1130	1035	1/20	195
801-15	208/230 265	#14	15	36.0 33.0	6.2 5.4	.55 .50	6.75 5.9	515	435	1320	1170	1/12	200
801-19	208/230 265	#14	15	40.6 34.0	7.8 6.7	.55 .50	8.35 7.2	545	500	1440	1330	1/12	220

OPTION FLOW CHART

801 SERIES CONTROL OPTIONS

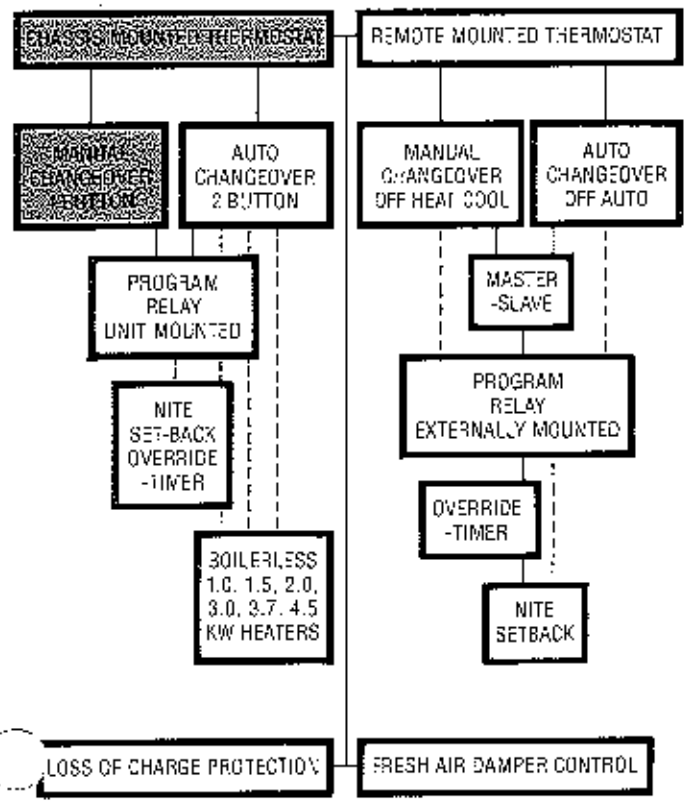

801 SERIES POWER OPTIONS

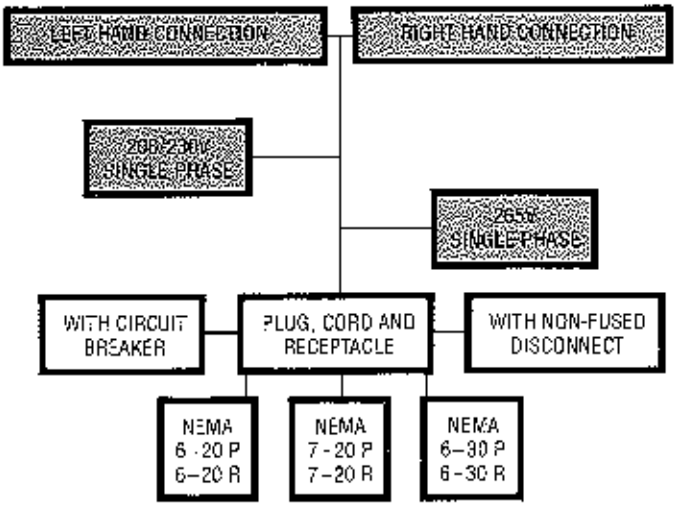

801 SERIES CABINETRY OPTIONS

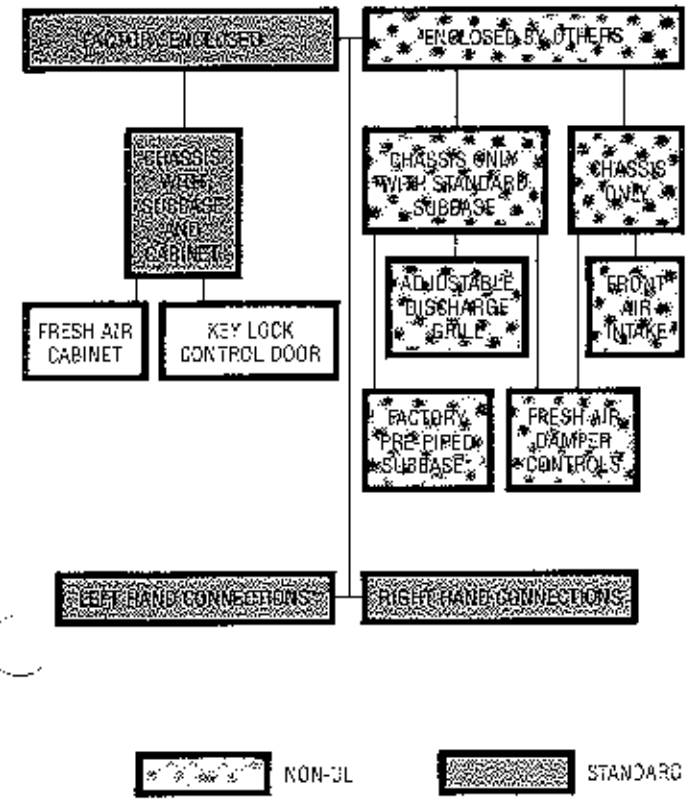

801 SERIES PIPING OPTIONS

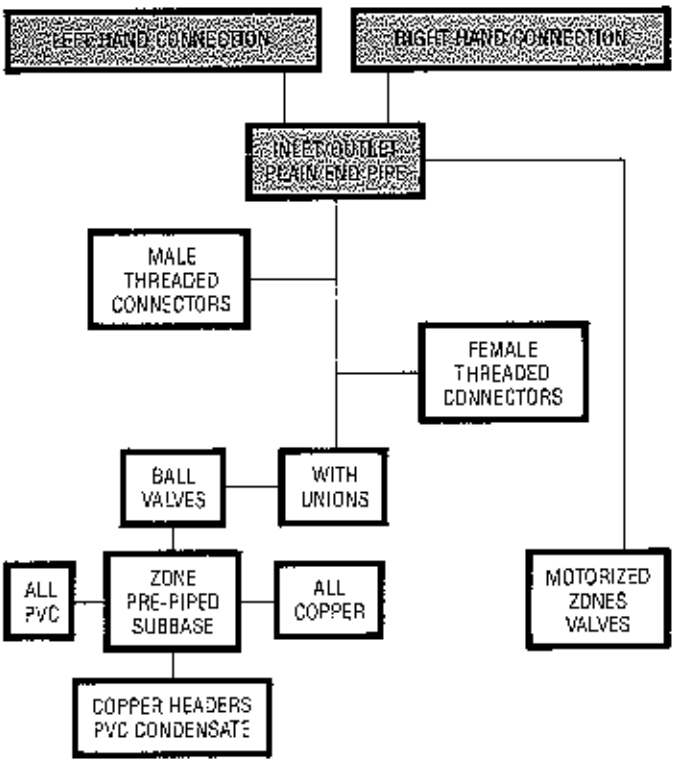

PERFORMANCE CHARTS

801-08

801-08 COOLING PERFORMANCE TABLE

Water Flow GPM	Ent. Wat. Temp. °F	Cooling Total BTUH	Sensible BTUH	Heat of Reject. BTUH	Power Input Watts	Leaving Wat. Temp. °F
1.00	65°	8300	6400	10774	725	86.6
1.50	65°	8500	6500	10804	675	79.5
2.00	65°	8600	6400	10904	675	75.9
2.50	65°	8600	6400	10818	650	73.7
1.00	75°	7800	6200	10445	775	95.9
1.50	75°	8200	6400	10674	725	89.3
2.00	75°	8400	6400	10874	725	85.8
2.50	75°	8400	6400	10789	700	83.7
1.00	85°	7100	5700	9830	800	104.7
1.50	85°	7600	6100	10245	775	98.7
2.00	85°	7900	6200	10460	750	95.5
2.50	85°	8000	6300	10560	750	93.4
1.00	90°	6600	5400	9416	825	109.0
1.50	90°	7300	5800	10030	800	103.3
2.00	90°	7500	6000	10145	775	100.2
2.50	90°	7700	6100	10345	775	98.3
1.00	95°	6100	5100	9001	850	113.1
1.50	95°	6800	5500	9616	825	107.9
2.00	95°	7100	5700	9830	800	104.9
2.50	95°	7300	5900	10030	800	103.0

801-08 HEATING PERFORMANCE TABLE

Ent. Wat. Temp. °F	Heating Total BTUH	Heat of Absorp. BTUH	Power Input Watts	Leaving Wat. Temp. °F	P.D. Ft. of Water
60°	7500	5026	725	46.5	0.9
60°	8100	5626	725	53.3	2.0
60°	8400	5840	750	54.4	3.3
60°	8500	5940	750	55.3	4.9
65°	8100	5626	725	53.1	0.9
65°	8700	6140	750	57.5	2.0
65°	8900	6340	750	58.9	3.3
65°	9000	6355	775	59.9	4.9
70°	8700	6140	750	57.3	0.9
70°	9200	6555	775	61.8	2.0
70°	9400	6755	775	63.4	3.3
70°	9500	6855	775	64.6	4.9
80°	9600	6955	775	66.3	0.9
80°	9900	7170	800	70.7	2.0
80°	10100	7370	800	72.8	3.3
80°	10200	7384	825	74.1	4.9
90°	10300	7484	825	75.2	0.9
90°	10500	7684	825	80.0	2.0
90°	10500	7599	850	82.3	3.3
90°	10600	7699	850	83.9	4.9

801-08 CORRECTION FACTORS FOR VARIATION IN ENTERING AIR TEMPERATURE

Ent. Air °F WB	Total Cooling Capacity	Sensible Capacity-Entering Air Dry Bulb 70°DB	75°DB	80°DB	85°DB	90°DB	Heat of Reject.	Cooling Power Input
61°	0.940	0.871	1.086	1.302	1.517	1.732	0.951	0.987
64°	0.970	0.719	0.935	1.150	1.365	1.580	0.976	0.994
67°	1.000	0.570	0.785	1.000	1.215	1.430	1.000	1.000
70°	1.030		0.637	0.852	1.067	1.282	1.024	1.006
73°	1.060		0.490	0.706	0.921	1.136	1.049	1.013

Ent. Air °F DB	Total Heating Capacity	Heat of Absorb.	Heating Power Input
60°	1.025	1.066	0.920
65°	1.015	1.037	0.960
70°	1.000	1.000	1.000
75°	0.980	0.956	1.040
80°	0.955	0.906	1.080

801-10

801-10 COOLING PERFORMANCE TABLE

Water Flow GPM	Ent. Wat. Temp. °F	Cooling Total BTUH	Sensible BTUH	Heat of Reject. BTUH	Power Input Watts	Leaving Wat. Temp. °F
1.25	65°	10600	8000	13586	875	86.6
1.90	65°	10800	8000	13616	825	79.4
2.55	65°	10900	8000	13630	800	75.7
3.20	65°	10900	8000	13630	800	73.5
1.25	75°	9900	7700	13057	925	95.9
1.90	75°	10400	7900	13386	875	89.1
2.55	75°	10600	8000	13501	850	83.6
3.20	75°	10700	8000	13601	850	83.5
1.25	85°	9000	7100	12328	975	104.7
1.90	85°	9700	7500	12857	925	98.6
2.55	85°	10000	7700	13157	925	95.3
3.20	85°	10100	7800	13172	900	93.3
1.25	90°	8400	6700	11813	1000	109.0
1.90	90°	9200	7300	12528	975	103.2
2.55	90°	9600	7500	12842	950	100.0
3.20	90°	9800	7600	12957	925	98.1
1.25	95°	7800	6300	11298	1025	113.1
1.90	95°	8700	6900	12113	1000	107.7
2.55	95°	9100	7200	12428	975	104.7
3.20	95°	9300	7300	12542	950	102.9

801-10 HEATING PERFORMANCE TABLE

Ent. Wat. Temp. °F	Heating Total BTUH	Heat of Absorp. BTUH	Power Input Watts	Leaving Wat. Temp. °F	P.D. Ft. of Water
60°	9300	6228	900	46.6	1.5
60°	10100	7028	900	53.4	3.1
60°	10400	7243	925	54.5	5.3
60°	10600	7443	925	55.5	7.9
65°	10100	7028	900	53.1	1.5
65°	10800	7643	925	57.6	3.1
65°	11100	7858	950	59.0	5.3
65°	11300	8058	950	60.1	7.9
70°	10800	7643	925	57.1	1.5
70°	11400	8158	950	62.0	3.1
70°	11700	8372	975	63.6	5.3
70°	11800	8472	975	64.8	7.9
80°	12000	8672	975	66.4	1.5
80°	12400	8987	1000	70.9	3.1
80°	12600	9187	1000	73.0	5.3
80°	12700	9202	1025	74.3	7.9
90°	12800	9302	1025	75.3	1.5
90°	13000	9416	1050	80.2	3.1
90°	13100	9516	1050	82.6	5.3
90°	13200	9616	1050	84.1	7.9

801-10 CORRECTION FACTORS FOR VARIATION IN ENTERING AIR TEMPERATURE

Ent. Air °F WB	Total Cooling Capacity	Sensible Capacity-Entering Air Dry Bulb 70°DB	75°DB	80°DB	85°DB	90°DB	Heat of Reject.	Cooling Power Input
61°	0.915	0.871	1.086	1.302	1.517	1.732	0.931	0.984
64°	0.958	0.719	0.935	1.150	1.365	1.580	0.966	0.992
67°	1.000	0.570	0.785	1.000	1.215	1.430	1.000	1.000
70°	1.040		0.637	0.852	1.067	1.282	1.032	1.008
73°	1.077		0.490	0.706	0.921	1.136	1.063	1.016

Ent. Air °F DB	Total Heating Capacity	Heat of Absorb.	Heating Power Input
60°	1.040	1.083	0.930
65°	1.020	1.042	0.965
70°	1.000	1.000	1.000
75°	0.980	0.958	1.035
80°	0.960	0.917	1.070

DIMENSIONS RIGHT HAND 2 PIPE

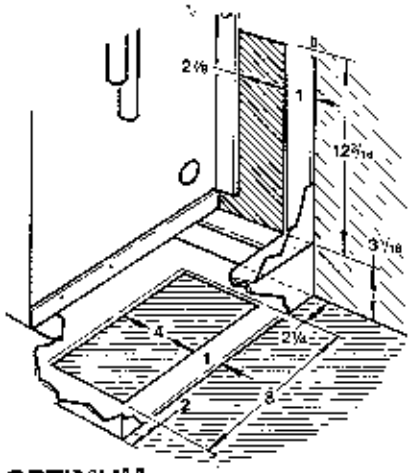

OPTIMUM PIPING LOCATIONS

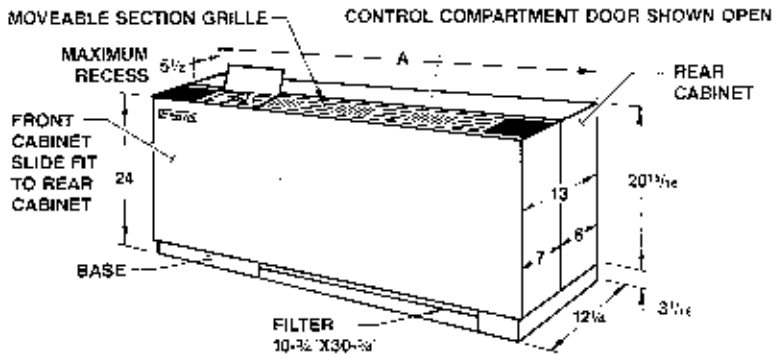

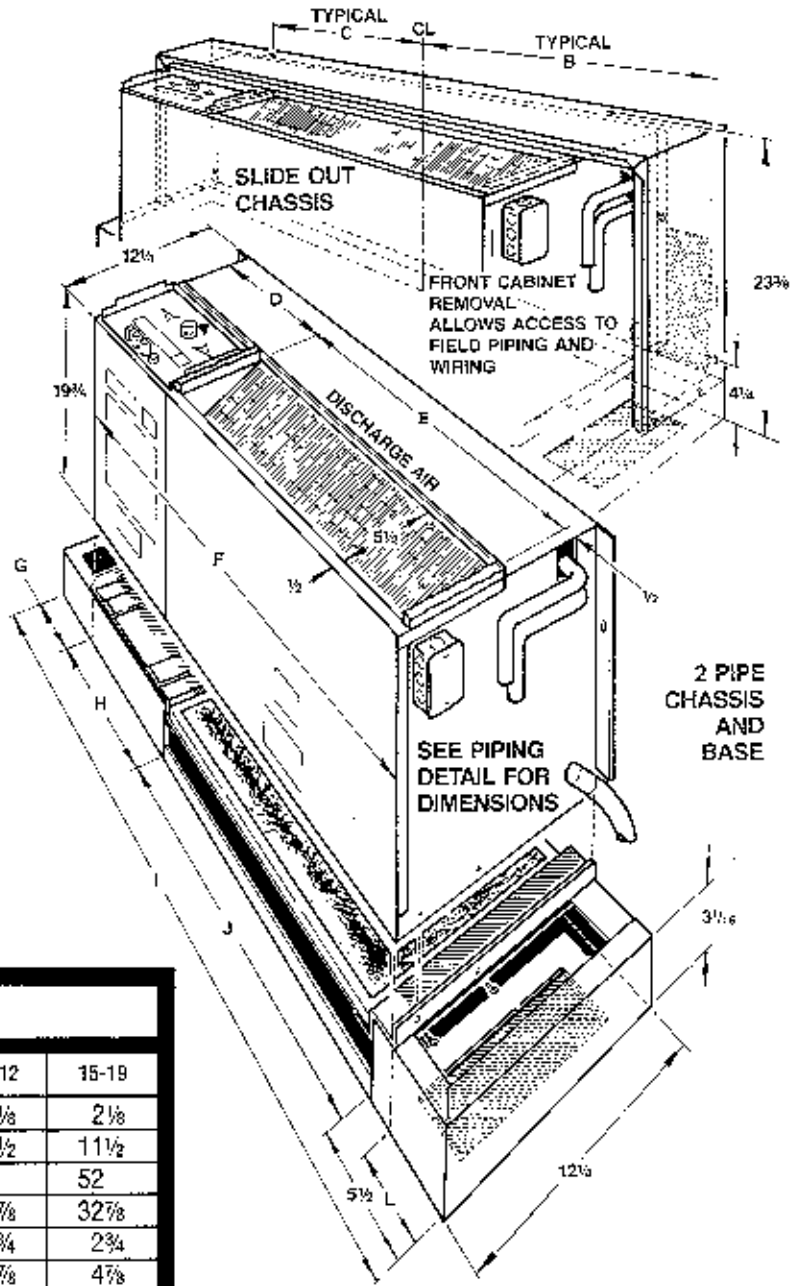

PIPING DETAIL

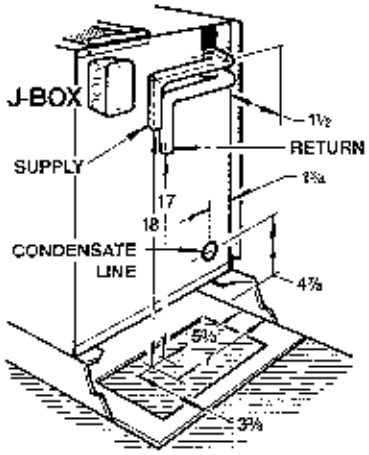

SUPPLY/RETURN-⅜"O.D. COPPER TUBING
CONDENSATE LINE-⅝"I.D. PLASTIC HOSE

801 MEASUREMENTS					
Item	08-12	15-19	Item	08-12	15-19
A	48	52	G	2⅛	2⅛
B	23⅜	25⅜	H	9½	11½
C	14	16	I	48	52
D	9½	11½	J	30⅞	32⅞
E	31	33	K	2¾	2¾
F	41	45	L	4⅞	4⅞

801-19

	801-19 COOLING PERFORMANCE TABLE						801-19 HEATING PERFORMANCE TABLE					
Water Flow GPM	Ent. Wat. Temp. °F	Cooling Total BTUH	Sensible BTUH	Heat of Reject. BTUH	Power Input Watts	Leaving Wat. Temp. °F	Ent. Wat. Temp. °F	Heating Total BTUH	Heat of Absorp. BTUH	Power Input Watts	Leaving Wat. Temp. °F	P.D. Ft. of Water
2.30	65°	20000	13800	25461	1600	87.2	60°	16900	11439	1600	46.7	2.2
3.60	65°	20600	13900	25805	1525	79.3	60°	18400	12854	1625	53.6	5.0
4.90	65°	20800	13900	25920	1500	75.5	60°	19000	13369	1650	54.8	8.6
6.20	65°	20800	13800	25834	1475	73.3	60°	19300	13669	1650	55.7	13.2
2.30	75°	18900	13300	24702	1700	96.5	65°	18300	12754	1625	53.1	2.2
3.60	75°	19800	13700	25346	1625	89.1	65°	19600	13883	1675	57.9	5.0
4.90	75°	20200	13800	25661	1600	85.5	65°	20200	14483	1675	59.3	8.6
6.20	75°	20400	13900	25775	1575	83.3	65°	20400	14598	1700	60.3	13.2
2.30	85°	17100	12300	23243	1800	105.3	70°	19600	13883	1675	57.3	2.2
3.60	85°	18500	13100	24387	1725	98.6	70°	20800	14998	1700	62.3	5.0
4.90	85°	19000	13400	24802	1700	95.1	70°	21200	15313	1725	63.9	8.6
6.20	85°	19300	13500	25017	1675	93.1	70°	21400	15513	1725	65.1	13.2
2.30	90°	16000	11700	22314	1850	109.5	80°	21600	15627	1750	66.5	2.2
3.60	90°	17600	12600	23658	1775	103.2	80°	22600	16542	1775	71.3	5.0
4.90	90°	18300	13000	24273	1750	99.9	80°	22800	16657	1800	73.2	8.6
6.20	90°	18600	13100	24487	1725	97.9	80°	23000	16771	1825	74.6	13.2
2.30	95°	14800	10900	21370	1925	113.5	90°	23200	16971	1825	75.4	2.2
3.60	95°	16600	12000	22829	1825	107.7	90°	23600	17286	1850	80.6	5.0
4.90	95°	17300	12500	23443	1800	104.6	90°	23800	17401	1875	82.9	8.6
6.20	95°	17700	12700	23758	1775	102.7	90°	23800	17315	1900	84.4	13.2

801-19 CORRECTION FACTORS FOR VARIATION IN ENTERING AIR TEMPERATURE

Ent. Air °F WB	Total Cooling Capacity	Sensible Capacity, Entering Air Dry Bulb					Heat of Reject.	Cooling Power Input	Ent. Air °F DB	Total Heating Capacity	Heat of Absorp.	Heating Power Input
		70°DB	75°DB	80°DB	85°DB	90°DB						
61°	0.878	0.871	1.086	1.302	1.517	1.732	0.903	0.986	60°	1.013	1.045	0.930
64°	0.943	0.719	0.935	1.150	1.365	1.580	0.955	0.993	65°	1.012	1.030	0.965
67°	1.000	0.570	0.785	1.000	1.215	1.430	1.000	1.000	70°	1.000	1.000	1.000
70°	1.049		0.637	0.852	1.067	1.282	1.039	1.007	75°	0.977	0.955	1.035
73°	1.090		0.490	0.706	0.921	1.136	1.072	1.014	80°	0.943	0.894	1.070

SAMPLE PROBLEM

To estimate the performance of a Model 801-10 under the following conditions:

COOLING MODE—High Speed Fan, Return Air at 80°F DB, 64°F WB. Supply Water at 75°F and with a Supply Water rate of 2.55 GPM.

HEATING MODE—Same conditions except the Return Air is 65°F and Entering Water Temperature is 65°F.

To calculate leaving water temperature:

COOLING MODE

$$\text{Lvg. Water Temp.} = \text{Entering Water Temp.} + \left[\frac{\text{Heat of Rejection BTUH}}{\text{GPM} \times 500}\right]$$

HEATING MODE

$$\text{Lvg. Water Temp.} = \text{Entering Water Temp.} - \left[\frac{\text{Heat of Absorption BTUH}}{\text{GPM} \times 500}\right]$$

SAMPLE SOLUTION

COOLING

	TOTAL BTUH	SENSIBLE BTUH	HEAT OF REJECT.	INPUT WATTS
From Chart:	10600	8000	13501	850
Factor:	× .958	÷ 1.15	÷ .966	× .992
Answer:	10155	9200	13042	843

HEATING

	TOTAL BTUH	HEAT OF ABSORP.	INPUT WATTS
From Chart:	11100	7858	950
Factor:	× 1.020	× 1.042	× .965
Answer:	11322	8188	917

S01-12

801-12 COOLING PERFORMANCE TABLE / 801-12 HEATING PERFORMANCE TABLE

Water Flow GPM	Ent. Wat. Temp. °F	Cooling Total BTUH	Sensible BTUH	Heat of Reject BTUH	Power Input Watts	Leaving Wat. Temp. °F	Ent. Wat. Temp. °F	Heating Total BTUH	Heat of Absorp BTUH	Power Input Watts	Leaving Wat. Temp. °F	P.D. Ft. of Water
1.50	65°	12800	9200	16554	1100	87.0	60°	11100	7516	1050	46.5	2.8
2.30	65°	13100	9300	16684	1050	79.5	60°	12000	8331	1075	53.5	6.0
3.10	65°	13200	9300	16698	1025	75.7	60°	12500	8831	1075	54.6	10.3
3.90	65°	13200	9300	16613	1000	73.5	60°	12700	8946	1100	55.5	15.5
1.50	75°	12000	8900	15925	1150	96.2	65°	12000	8331	1075	53.1	2.8
2.30	75°	12600	9200	16354	1100	89.2	65°	12900	9146	1100	57.8	6.0
3.10	75°	12800	9300	16469	1075	85.6	65°	13300	9546	1100	59.1	10.3
3.90	75°	12900	9300	16569	1075	83.5	65°	13500	9660	1125	60.1	15.5
1.50	85°	10800	8200	14981	1225	105.0	70°	12900	9146	1100	57.1	2.8
2.30	85°	11700	8800	15710	1175	98.7	70°	13600	9760	1125	62.0	6.0
3.10	85°	12100	8900	16025	1150	95.3	70°	14000	10160	1125	63.7	10.3
3.90	85°	12300	9000	16140	1125	93.3	70°	14100	10175	1150	64.8	15.5
1.50	90°	10100	7800	14366	1250	109.3	80°	14300	10375	1150	66.4	2.8
2.30	90°	11100	8400	15196	1200	103.3	80°	14800	10790	1175	71.0	6.0
3.10	90°	11600	8700	15610	1175	100.1	80°	15000	10990	1175	73.0	10.3
3.90	90°	11800	8800	15810	1175	98.1	80°	15200	11104	1200	74.4	15.5
1.50	95°	9300	7300	13737	1300	113.4	90°	15200	11104	1200	75.2	2.8
2.30	95°	10500	8000	14766	1250	107.8	90°	15600	11419	1225	80.3	6.0
3.10	95°	11000	8300	15181	1225	104.8	90°	15700	11434	1250	82.6	10.3
3.90	95°	11200	8500	15296	1200	102.9	90°	15700	11434	1250	84.1	15.5

801-12 CORRECTION FACTORS FOR VARIATION IN ENTERING AIR TEMPERATURE

Ent. Air °F WB	Total Cooling Capacity	Sensible Capacity Entering Air Dry Bulb 70°DB	75°DB	80°DB	85°DB	90°DB	Heat of Reject.	Cooling Power Input	Ent. Air °F DB	Total Heating Capacity	Heat of Absorb.	Heating Power Input
61°	0.896	0.871	1.086	1.302	1.517	1.732	0.916	0.978	60°	1.010	1.037	0.940
64°	0.949	0.719	0.935	1.150	1.365	1.580	0.959	0.989	65°	1.010	1.025	0.970
67°	1.000	0.570	0.785	1.000	1.215	1.430	1.000	1.000	70°	1.000	1.000	1.000
70°	1.049		0.637	0.852	1.067	1.282	1.040	1.011	75°	0.980	0.961	1.030
73°	1.096		0.490	0.706	0.921	1.136	1.078	1.022	80°	0.950	0.908	1.060

S01-15

801-15 COOLING PERFORMANCE TABLE / 801-15 HEATING PERFORMANCE TABLE

Water Flow GPM	Ent. Wat. Temp. °F	Cooling Total BTUH	Sensible BTUH	Heat of Reject. BTUH	Power Input Watts	Leaving Wat. Temp. °F	Ent. Wat. Temp. °F	Heating Total BTUH	Heat of Absorp BTUH	Power Input Watts	Leaving Wat. Temp. °F	P.D. Ft. of Water
2.00	65°	15800	11500	20237	1300	85.3	60°	13800	9363	1300	47.7	1.5
3.00	65°	16200	11600	20466	1250	78.6	60°	14900	10378	1325	53.8	3.1
4.00	65°	16200	11600	20381	1225	75.2	60°	15300	10692	1350	54.8	5.2
5.00	65°	16300	11500	20481	1225	73.2	60°	15600	10992	1350	55.7	7.8
2.00	75°	15000	11200	19778	1400	94.7	65°	15000	10478	1325	54.0	1.5
3.00	75°	15600	11500	20208	1350	88.4	65°	15900	11292	1350	58.0	3.1
4.00	75°	15800	11500	20322	1325	85.1	65°	16300	11607	1375	59.4	5.2
5.00	75°	15900	11600	20337	1300	83.1	65°	16500	11807	1375	60.4	7.8
2.00	85°	13600	10400	18634	1475	103.7	70°	16000	11392	1350	58.2	1.5
3.00	85°	14500	11000	19364	1425	97.9	70°	16800	12022	1400	62.4	3.1
4.00	85°	14900	11200	19678	1400	94.8	70°	17100	12322	1400	64.0	5.2
5.00	85°	15100	11300	19793	1375	92.9	70°	17300	12522	1400	65.1	7.8
2.00	90°	12800	9900	18005	1525	108.0	80°	17600	12736	1425	67.5	1.5
3.00	90°	13900	10600	18934	1475	102.6	80°	18200	13251	1450	71.5	3.1
4.00	90°	14300	10800	19249	1450	99.6	80°	18400	13366	1475	73.4	5.2
5.00	90°	14600	11000	19464	1425	97.8	80°	18500	13466	1475	74.7	7.8
2.00	95°	11900	9300	17275	1575	112.2	90°	18700	13666	1475	76.5	1.5
3.00	95°	13100	10100	18220	1500	107.1	90°	19100	13895	1525	80.9	3.1
4.00	95°	13600	10400	18634	1475	104.3	90°	19200	13995	1525	83.1	5.2
5.00	95°	13900	10600	18934	1475	102.6	90°	19300	14095	1525	84.4	7.8

801-15 CORRECTION FACTORS FOR VARIATION IN ENTERING AIR TEMPERATURE

Ent. Air °F WB	Total Cooling Capacity	Sensible Capacity Entering Air Dry Bulb 70°DB	75°DB	80°DB	85°DB	90°DB	Heat of Reject	Cooling Power Input	Ent. Air °F DB	Total Heating Capacity	Heat of Absorb.	Heating Power Input
61°	0.855	0.871	1.086	1.302	1.517	1.732	0.885	0.978	60°	0.997	1.019	0.940
64°	0.933	0.719	0.935	1.150	1.365	1.580	0.947	0.989	65°	1.005	1.019	0.970
67°	1.000	0.570	0.785	1.000	1.215	1.430	1.000	1.000	70°	1.000	1.000	1.000
70°	1.056		0.637	0.852	1.067	1.282	1.045	1.011	75°	0.982	0.963	1.030
73°	1.100		0.490	0.706	0.921	1.136	1.081	1.022	80°	0.951	0.909	1.060

LEFT HAND 2 PIPE

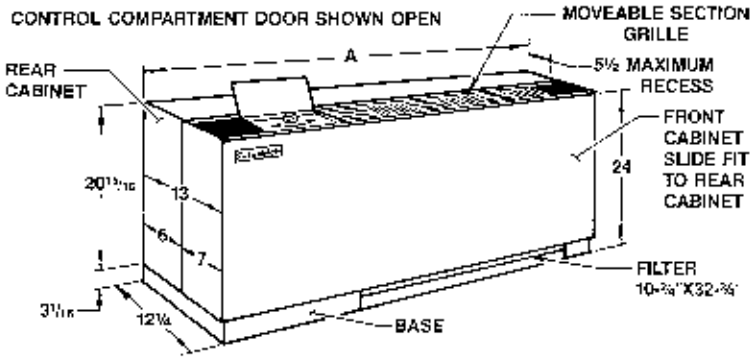

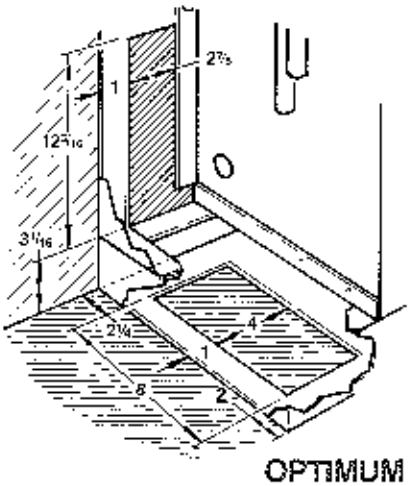

OPTIMUM PIPING LOCATIONS

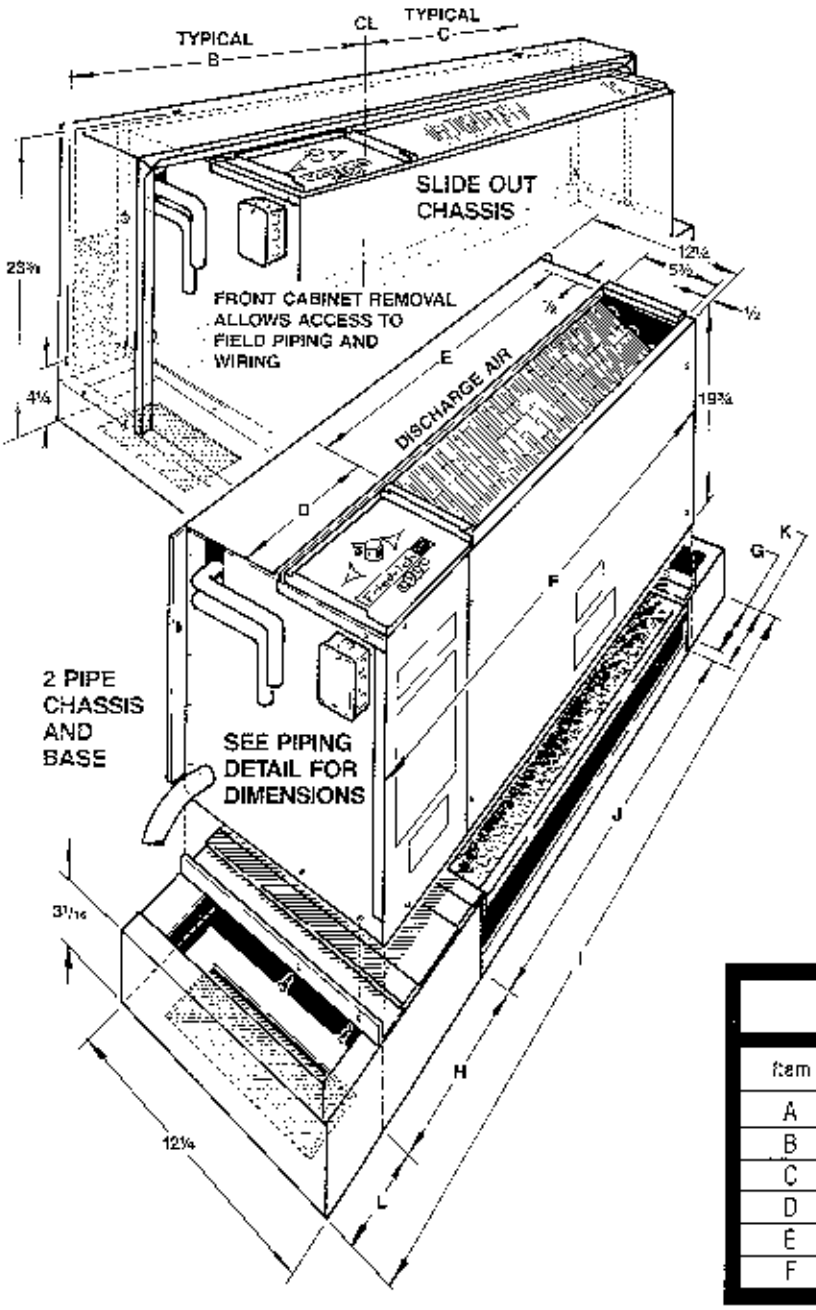

PIPING DETAIL

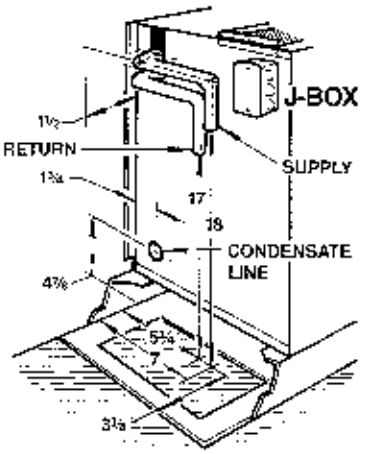

SUPPLY/RETURN-⅝"O.D. COPPER TUBING
CONDENSATE LINE-¾"I.D. PLASTIC HOSE

801 MEASUREMENTS					
Item	08-12	15-19	Item	08-12	15-19
A	48	52	G	2⅛	2⅞
B	23⅜	25⅜	H	9½	11½
C	14	16	I	48	52
D	9½	11½	J	30⅞	32⅞
E	31	33	K	2¾	2¾
F	41	45	L	4⅞	4⅞

OPTIONS

PROGRAM CONTROL BOX

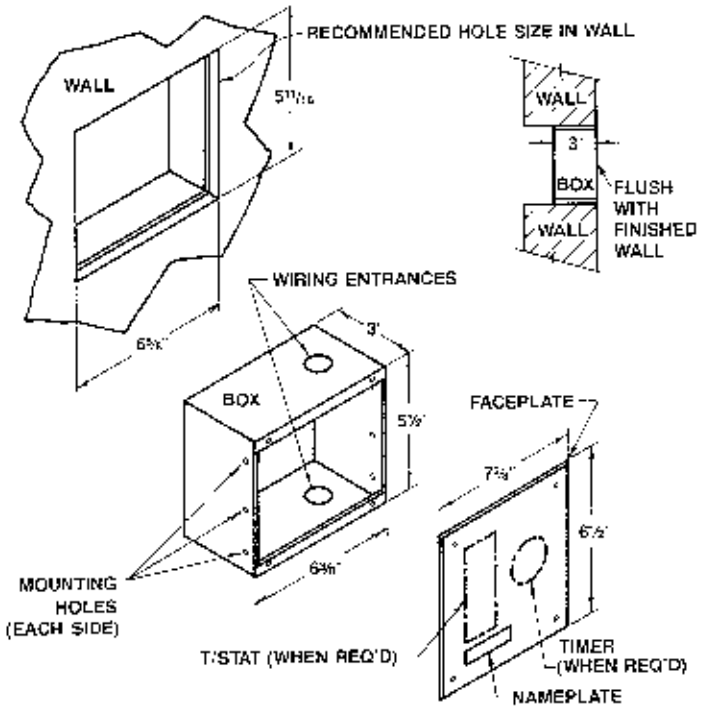

POWER CONNECTIONS

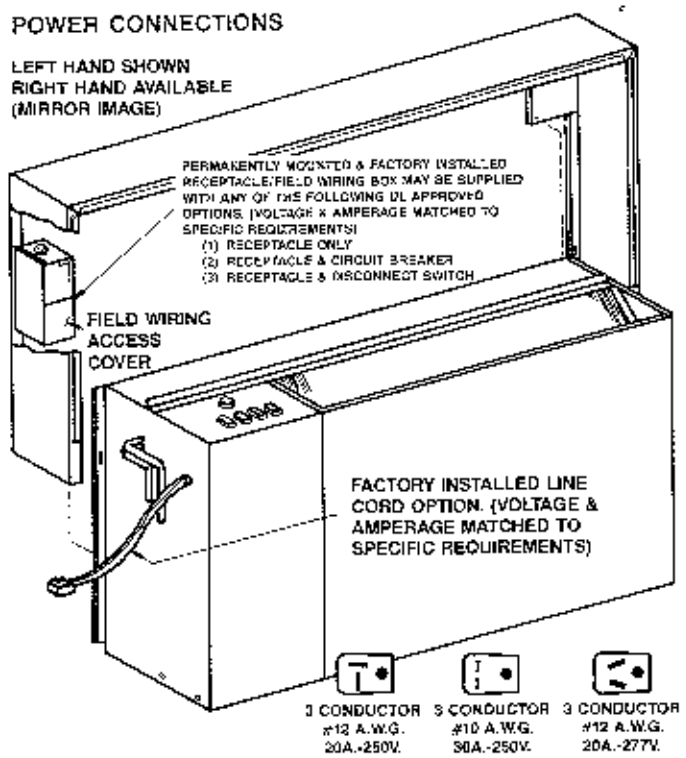

ADJUSTABLE DISCHARGE GRILLE

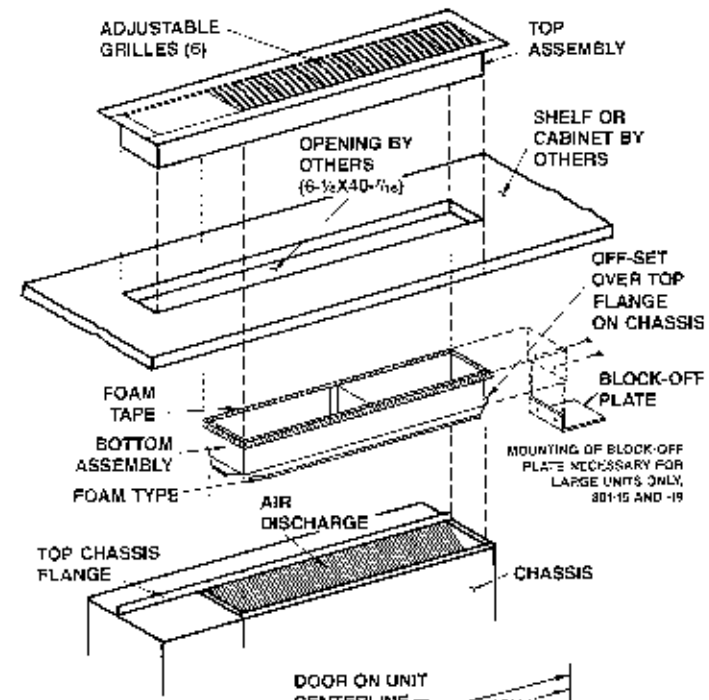

PRE-PIPED SUBBASE

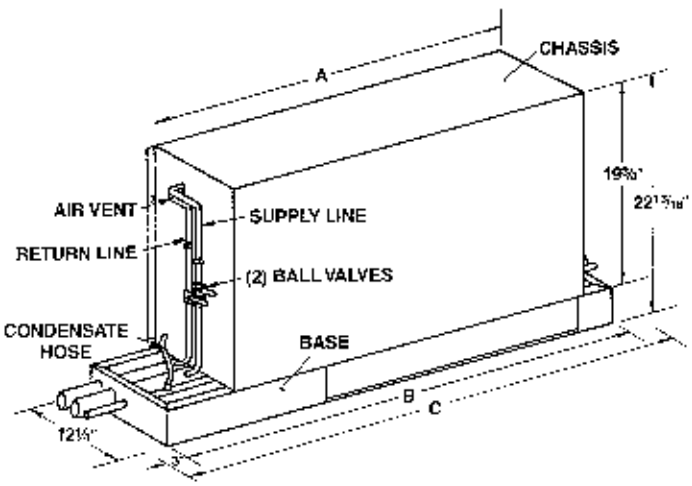

FRESH AIR DAMPER BASE

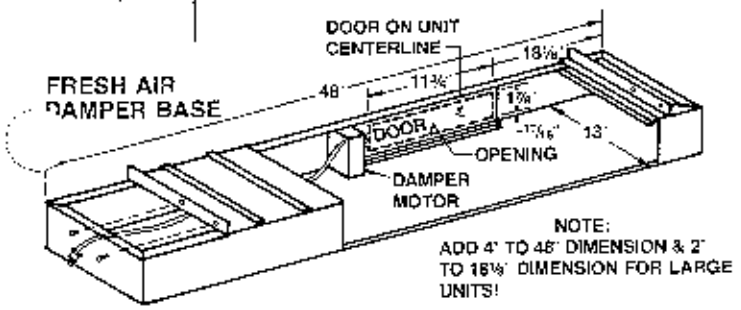

Item	68-12	15-19
A	41	45
B	48	52
C	54	58

SPECIFICATIONS

Continuing engineering research results in steady improvements. Therefore, these specifications are subject to change without notice.

GENERAL

ALL units must carry ARI certification (per STD 320) and UL listing via appropriate labeling. All electrical and/or refrigeration components shall be UL recognized. The Manufacturer's warranty, unit serviceability and project start-up assistance shall be given economic consideration in bids. Tabulated efficiency and capacity shall be considered minimum.

CABINETRY

Shall be heavy gauge furniture steel finished in baked enamel with bottom return and top discharge. Cabinet shall be two-piece with back portion for wall or floor mounting. Front portion of cabinet shall slide fit to rear portion without tools required. Removal of cabinet front shall give complete side and front access to chassis piping and wiring. Hinged control door shall provide access to unit control box. Cabinet shall be thermally and acoustically insulated.

CHASSIS

Shall be removable without dismantling cabinet. Both compressor and fan compartments shall be insulated and have removable insulated steel cover plates giving (with cabinet insulation) double acoustical protection between the space and the compressor and fan.

REFRIGERANT CIRCUIT

Hermetic compressors shall be internally sprung, externally isolated, and rail-mounted to minimize sound transmission. Co-axial (tube in tube) refrigerant-to-water heat exchanger shall be copper inner water tube and steel refrigerant outer tube designed for 450 PSI refrigerant pressure and 350 PSI water pressure.

Fin-tube refrigerant-to-air exchanger shall be aluminum fin plate and copper tube construction rated to withstand 425 PSI refrigerant working pressure. Four-way solenoid activated refrigerant reversing valve shall allow heating operation should the solenoid fail to function. R-22 refrigerant charge shall be precisely metered and refrigerant metering devices (capillary tubes) shall be carefully selected for optimum performance. All interconnecting tubing shall be copper.

ELECTRICAL

Motor and dual blower assembly shall be removable without disturbing the chassis. Compressor and blower motors shall be individually protected against current and/or heat overload.

CONTROLS

Standard control shall be mounted with manually adjustable thermostat, dual sensing type with one bulb in the entering air and one bulb in the discharge. The control box shall have four buttons consisting of STANDBY-HI COOL-LO COOL-and HEAT.

POWER CONNECTION

UL approved unit shall be provided with a factory mounted junction box on the side of the chassis for direct wire connection. The unit shall operate with either 208/230 v or 265 v single phase 60hz supply current.

CONTROL OPTIONS (UL)

UNIT-MOUNTED AUTO CHANGEOVER The thermostat shall be a unit mounted automatic changeover type. The control box shall have two buttons consisting of STANDBY-ON.

PROGRAM RELAY The unit shall be provided with a relay that accepts a 24 volt signal from a central time clock which establishes occupied/unoccupied modes. This functions with a manual (auto changeover) unit mounted thermostat.

REMOTE THERMOSTAT The unit shall be provided with a 24 volt anticipating type wall thermostat:

A) MANUAL CHANGEOVER The thermostat shall be a manual changeover type with OFF-HEAT-COOL selector switch and FAN-AUTO selector switch.

B) AUTO CHANGEOVER The thermostat shall be an auto changeover type with OFF-AUTO selector switch and FAN-AUTO selector switch.

C) MASTER-SLAVE The master-slave operation shall be accomplished with either "A)" or "B)" remote thermostat. Additional units (slave) shall be connected to the master unit with the operation of all units dictated by the single wall mounted thermostat.

OVERRIDE TIMER The override operation shall be accomplished with a unit mounted manual (auto) changeover thermostat and a random start relay. A 0 to 2 hour timer shall override a 24 volt signal from a centrally located time clock which establishes occupied/unoccupied modes with a *nite setback* function to maintain a minimum space temperature of 50°F.

BOILERLESS UNIT The unit shall have an electric heating coil (1kw to 4.5kw), aquastat, and override switch such that when the water temperature drops below 60 degrees F, the unit controls will shut off the compressor and activate the electric coil. The override switch permits electric heating in the event of the compressor's failure.

MOTORIZED ZONE VALVES The unit shall be provided with a factory mounted motorized zone valve. When the compressor operates on either heating or cooling modes, the valve is open. The valve closes when the compressor is off.

FRESH AIR DAMPER The unit shall be provided with a motorized fresh air damper, factory wired and mounted, that will cycle with both heating and cooling. A manual override switch shall be provided.

LOSS OF CHARGE PROTECTION The unit shall be provided with a low pressure switch that shall disable the compressor from overheating in the event of the loss of refrigerant charge.

PROGRAM CONTROL BOX The unit shall have a factory wired and installed program control box with a random start relay and/or nite setback and/or override timer. (Call factory for software/hardware options).

POWER OPTIONS

FACTORY SUPPLY PLUG The unit shall be provided with a factory mounted cord and plug, conforming to NEMA (6-20P or 7-20P or 6-30P).

FACTORY SUPPLY RECEPTACLE The unit shall be provided with a factory mounted receptacle conforming to NEMA (6-20R or 7-20R or 6-30R). The receptacle box shall be mounted on the back half of the cabinet to receive the power connection. (The unit may also have a factory mounted circuit breaker or disconnect switch).

CABINETRY OPTIONS (NON-UL)

ENCLOSURE BY OTHERS The unit shall be chassis only or chassis on subbase.

A) FRONT RETURN The unit is less subbase but with a front air return.

B) ADJUSTABLE REMOTE GRILL The unit shall be with chassis only or chassis on subbase and supplied with an adjustable supply duct collar and grill for enclosure by others.

PIPING OPTIONS

FACTORY PIPING KITS The unit shall be provided with factory installed supply and return connection on right or left side.

A) BALL VALVE AND UNION A ball valve and union shall be factory mounted on the supply and return connections.

B) THREADED CONNECTIONS A half inch male or female pipe thread fitting shall be factory mounted on the supply and return connections.

C) PRE-PIPED SUBBASE A pipe subbase shall be provided. The subbase shall consist of supply, return, and condensate piping. The piping shall be of (total copper or total PVC or PVC condensate with copper headers). Factory mounted union and shut-off valves shall be provided for ease of connection to chassis.

Friedrich
Climate Master®
Division of Friedrich
Air Conditioning & Refrigeration Co.
2007 Beechgrove Place
Utica, New York 13501
(315) 724-7111

© 1984 Friedrich

FCM-SPEC01A-1253

Printed in USA

JUN 84