Friedrich®

801 SERIES

Heat Recovery Systems Console Models

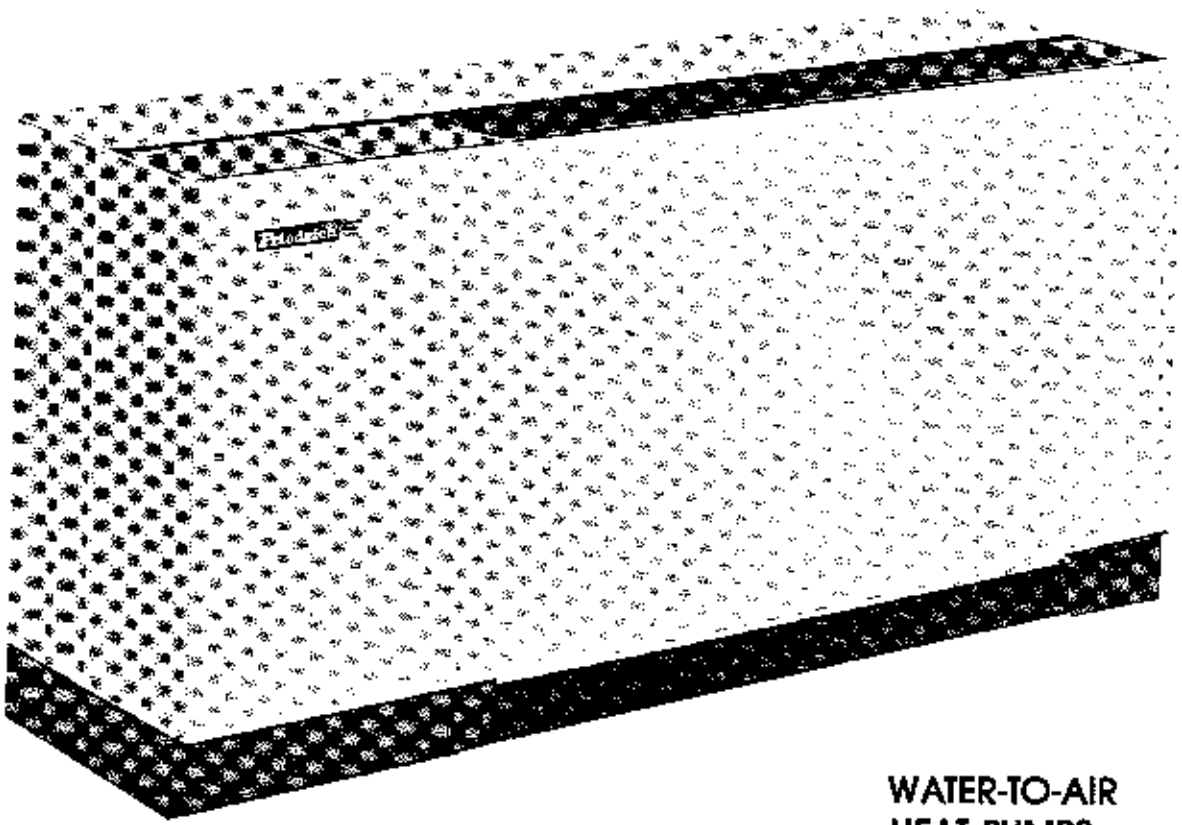

WATER-TO-AIR
HEAT PUMPS
ENGINEERING DATA

801 15/19

LEFT HAND-2 PIPE

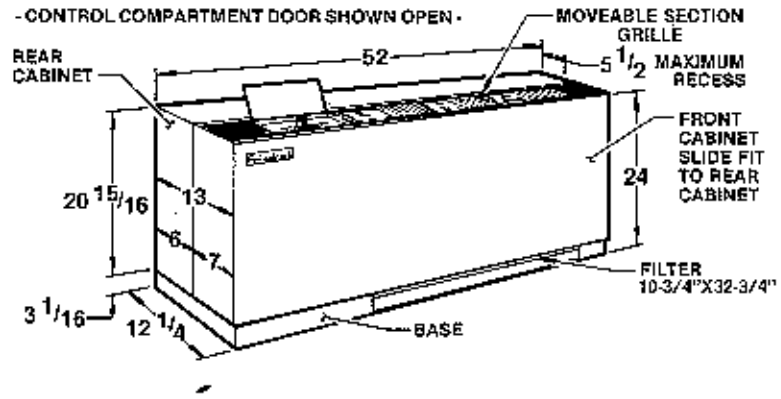

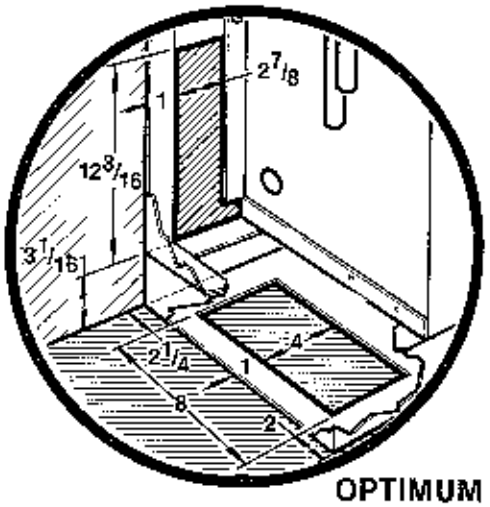

OPTIMUM PIPING LOCATIONS

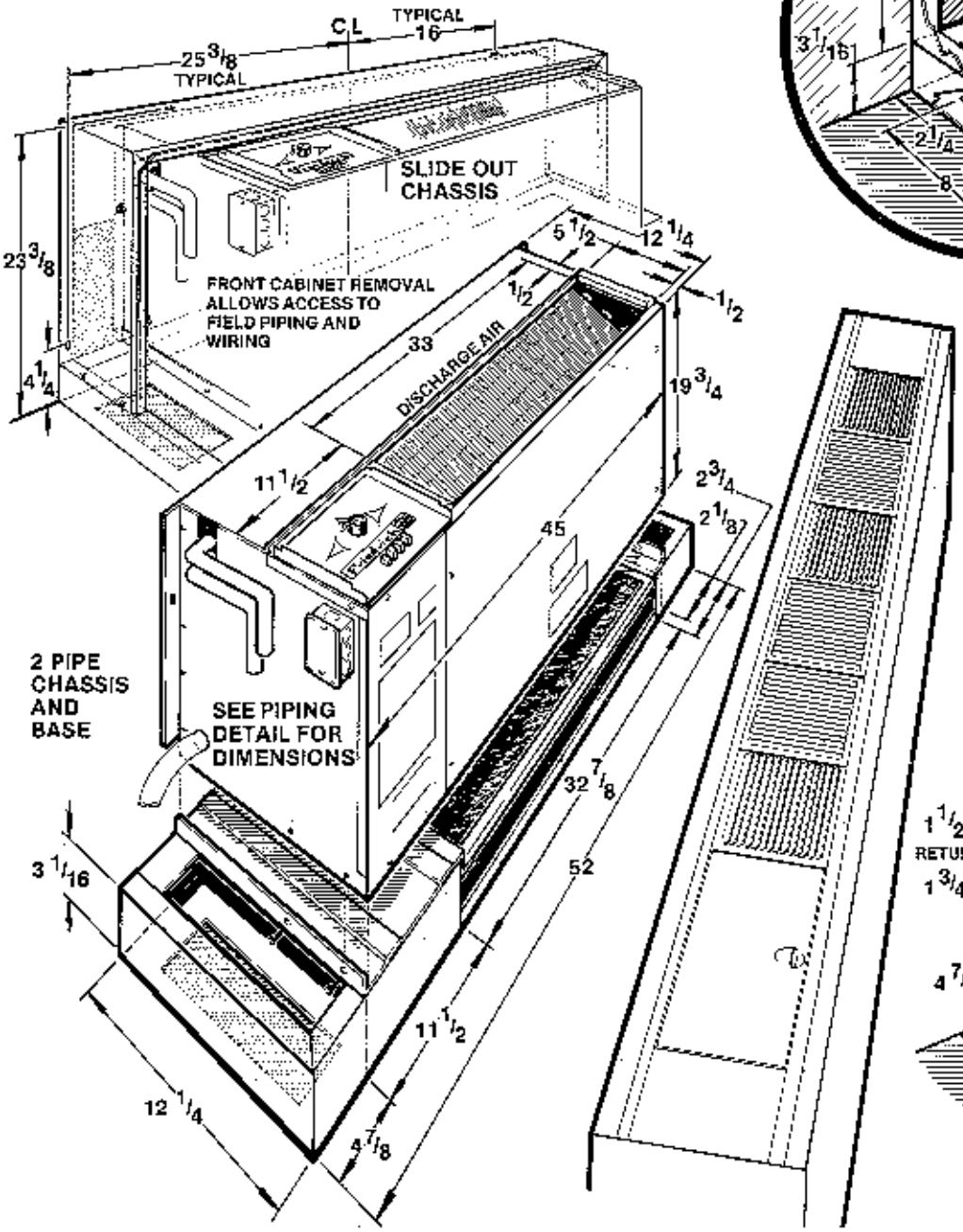

PIPING DETAIL

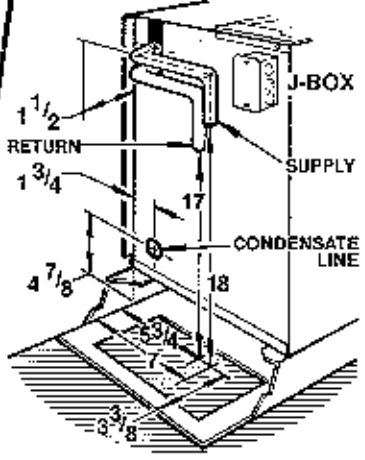

SUPPLY/RETURN-5/8"O.D. COPPER TUBING
CONDENSATE LINE-5/8" I.D. PLASTIC HOSE

Friedrich® Climate Master Series

801 SERIES DIMENSIONS

— CERTIFICATIONS —
3/80

CONTINUING ENGINEERING RESEARCH RESULTS IN STEADY IMPROVEMENT. THEREFORE, THESE SPECIFICATIONS ARE SUBJECT TO CHANGE WITHOUT NOTICE.
PRINTED IN U.S.A.

FCM 801-15&19-C

801 15/19

RIGHT HAND-2 PIPE

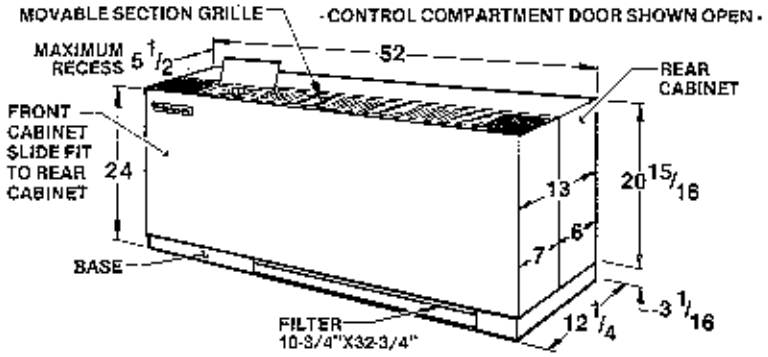

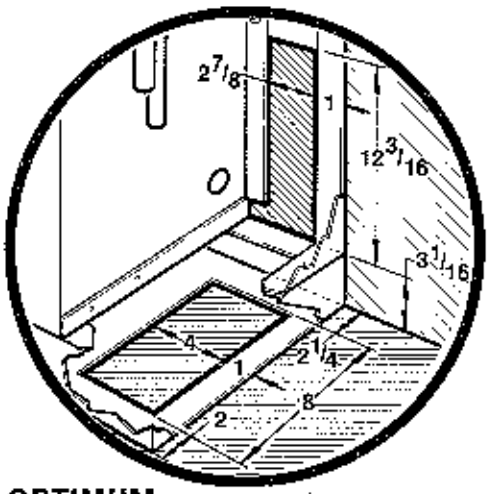

OPTIMUM PIPING LOCATIONS

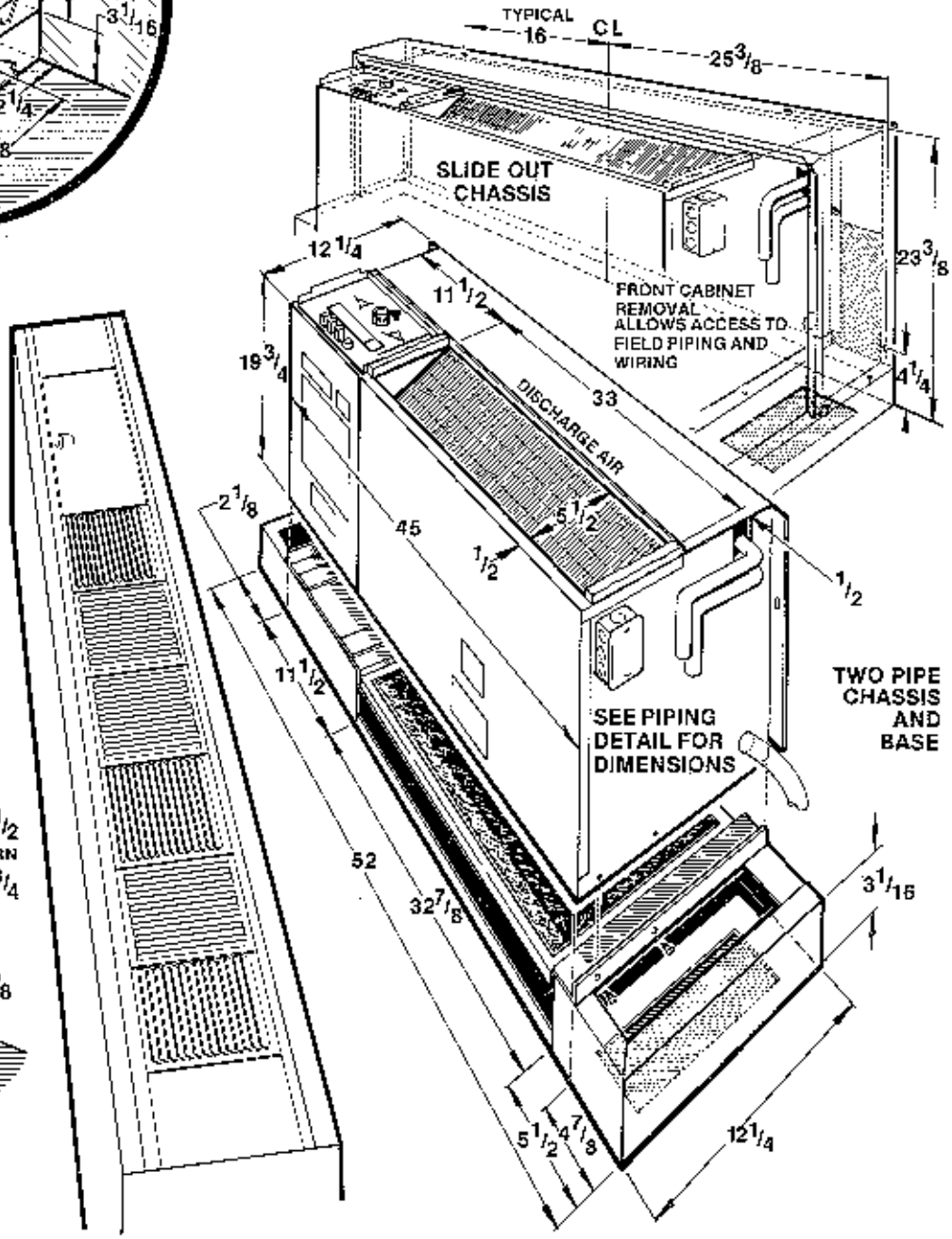

PIPING DETAIL

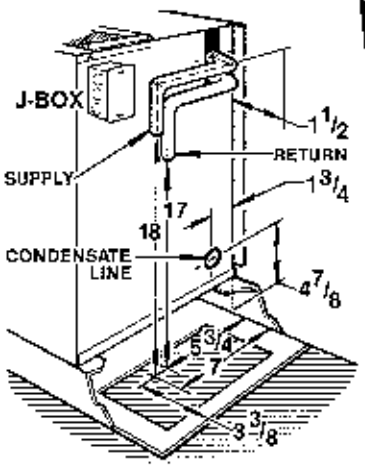

SUPPLY/RETURN-5/8"O.D. COPPER TUBING

CONDENSATE LINE-5/8"I.D. PLASTIC HOSE

Friedrich Climate Master Series

801 SERIES DIMENSIONS

— CERTIFICATIONS —
3/80

CONTINUING ENGINEERING RESEARCH RESULTS IN STEADY IMPROVEMENT. THEREFORE, THESE SPECIFICATIONS ARE SUBJECT TO CHANGE WITHOUT NOTICE
PRINTED IN U.S.A.

FCM 801-15 & 19-C1

801 08 10 12

LEFT HAND-2 PIPE

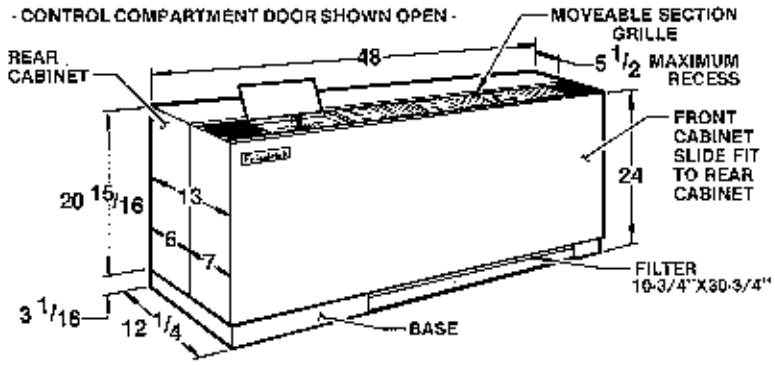

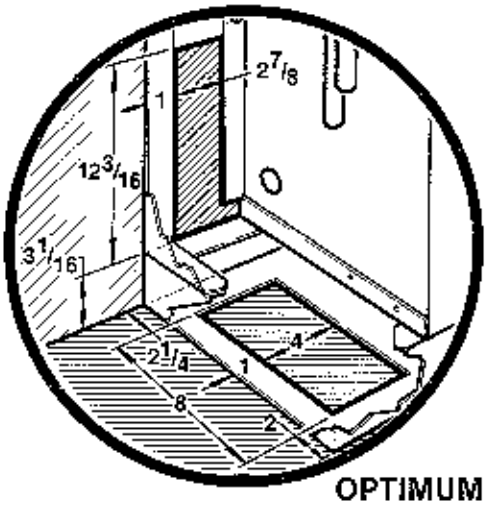

OPTIMUM PIPING LOCATIONS

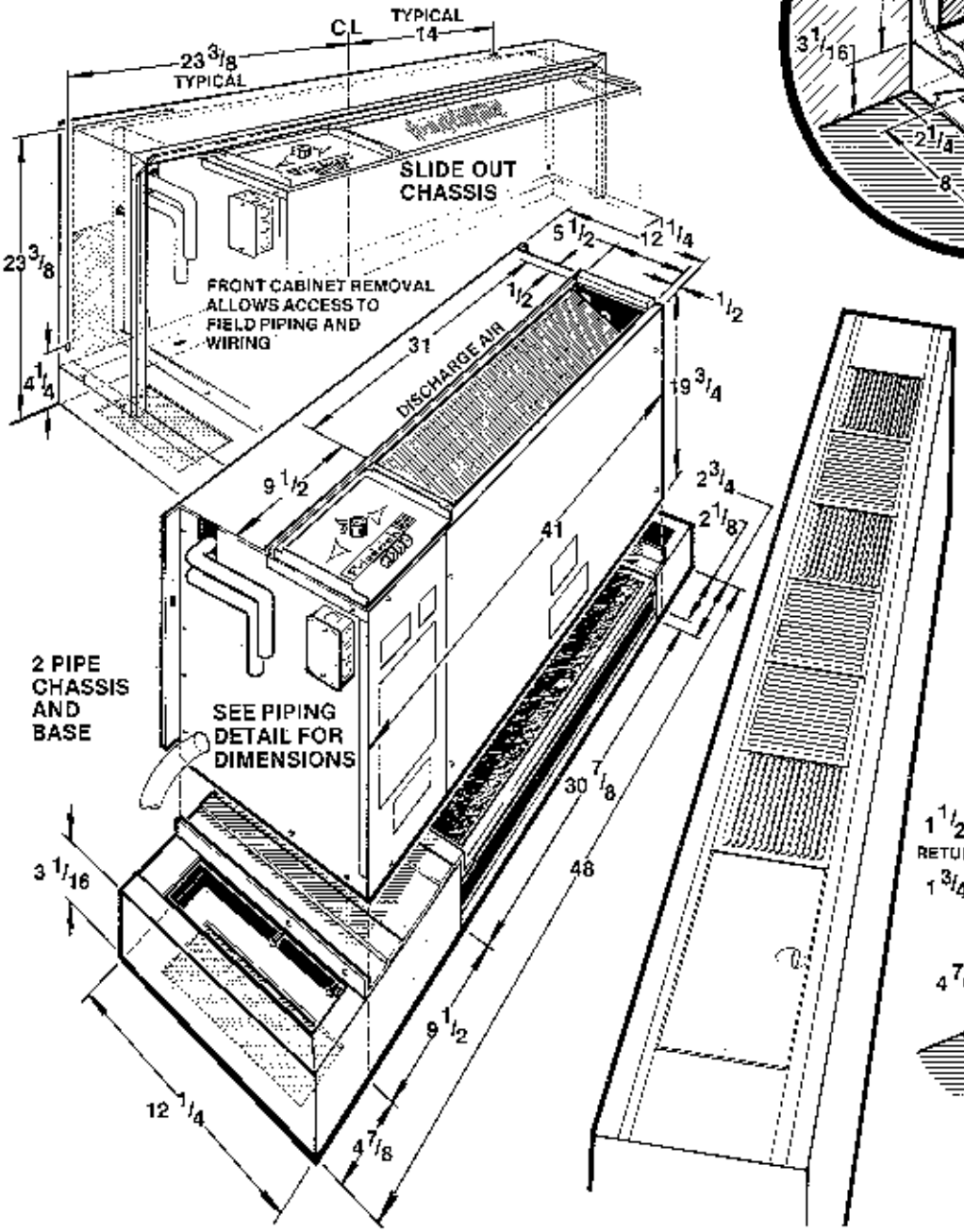

PIPING DETAIL

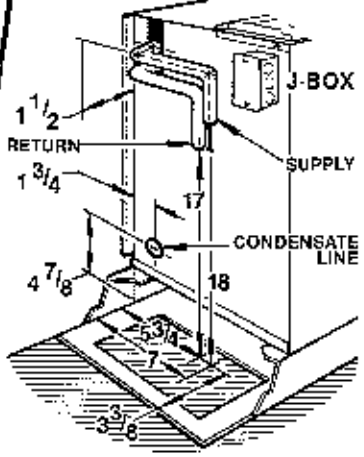

SUPPLY/RETURN-5/8"O.D. COPPER TUBING
CONDENSATE LINE-5/8" I.D. PLASTIC HOSE

Friedrich Climate Master Series

801 SERIES DIMENSIONS

– CERTIFICATIONS –
3/90

CONTINUING ENGINEERING RESEARCH RESULTS IN STEADY IMPROVEMENT. THEREFORE, THESE SPECIFICATIONS ARE SUBJECT TO CHANGE WITHOUT NOTICE.
PRINTED IN U.S.A.

FCM 801-08,10&12-C

801 08 10 12

RIGHT HAND-2 PIPE

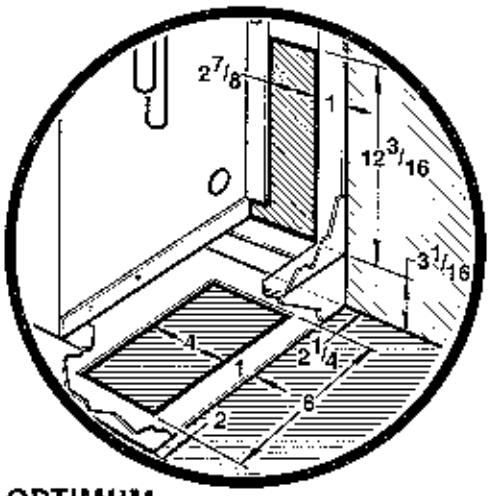

OPTIMUM PIPING LOCATIONS

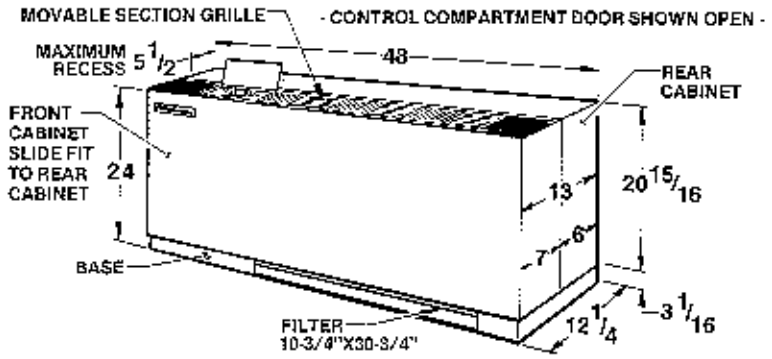

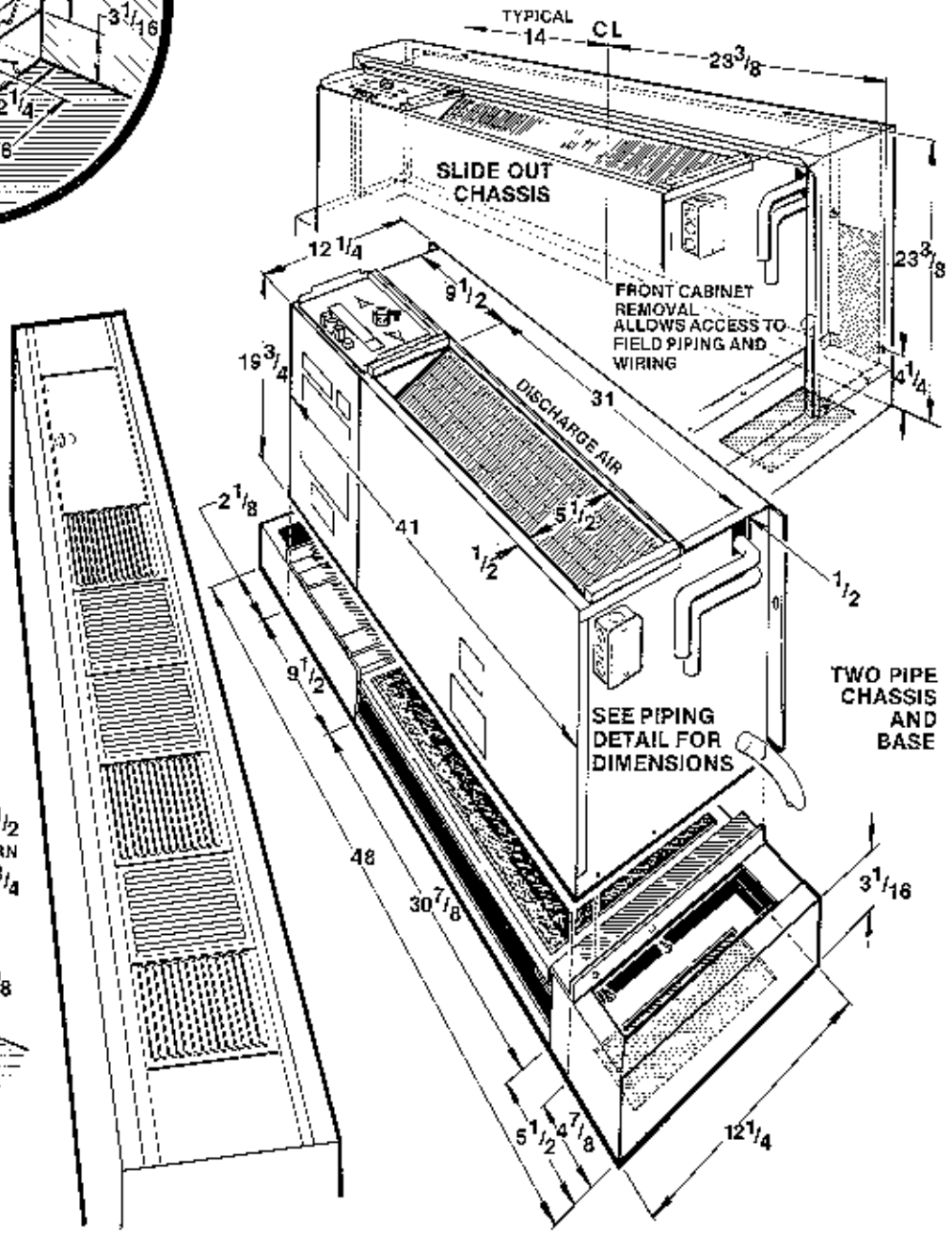

PIPING DETAIL

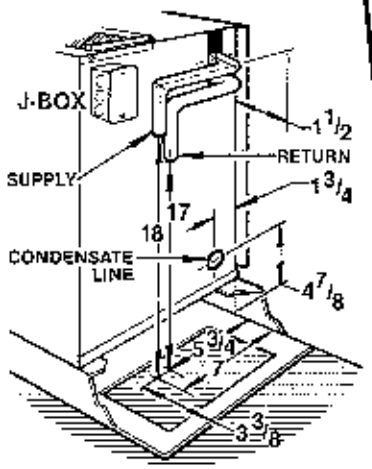

SUPPLY/RETURN-5/8"O.D. COPPER TUBING

CONDENSATE LINE-5/8"I.D. PLASTIC HOSE

Friedrich Climate Master Series

801 SERIES DIMENSIONS

– CERTIFICATIONS –
3/80

CONTINUING ENGINEERING RESEARCH RESULTS IN STEADY IMPROVEMENT. THEREFORE, THESE SPECIFICATIONS ARE SUBJECT TO CHANGE WITHOUT NOTICE. PRINTED IN U.S.A.

FCM 801-08, 10& 12-C1

COOLING PERFORMANCE CURVE 801-08

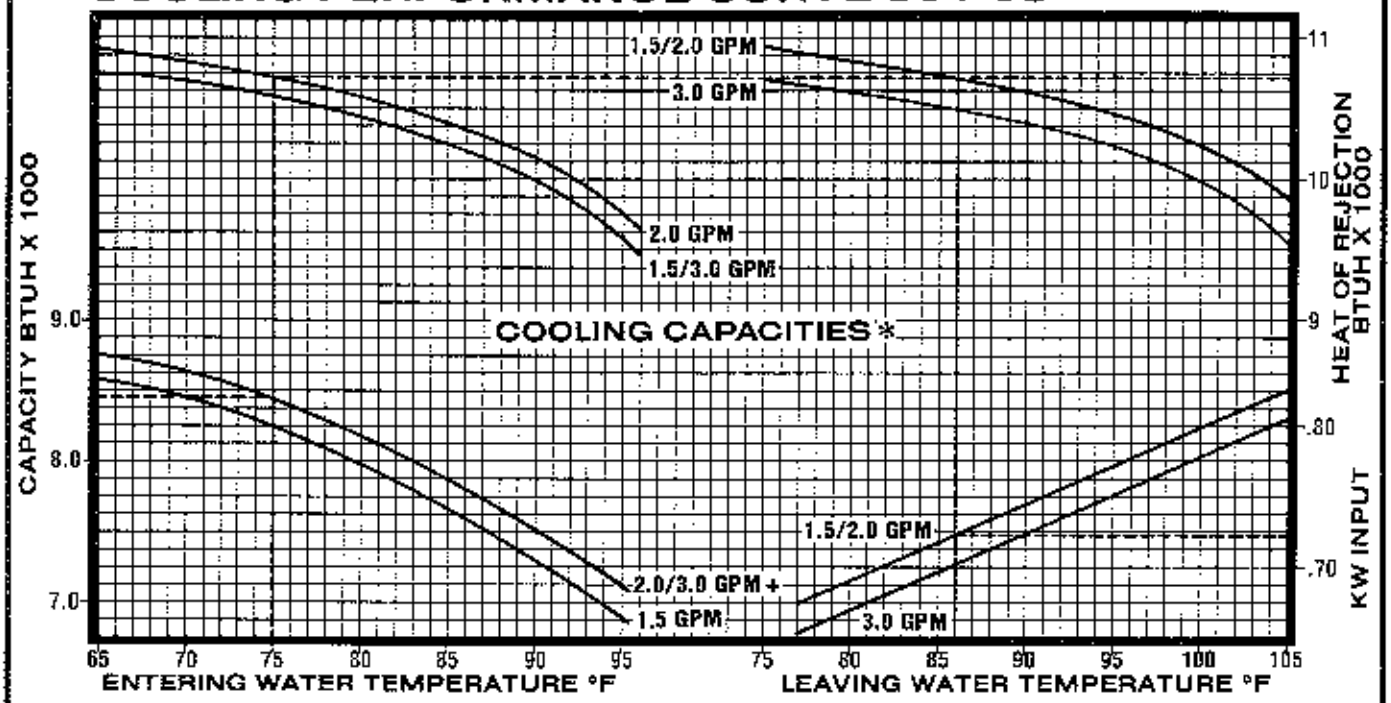

COOLING CORRECTION CURVE **

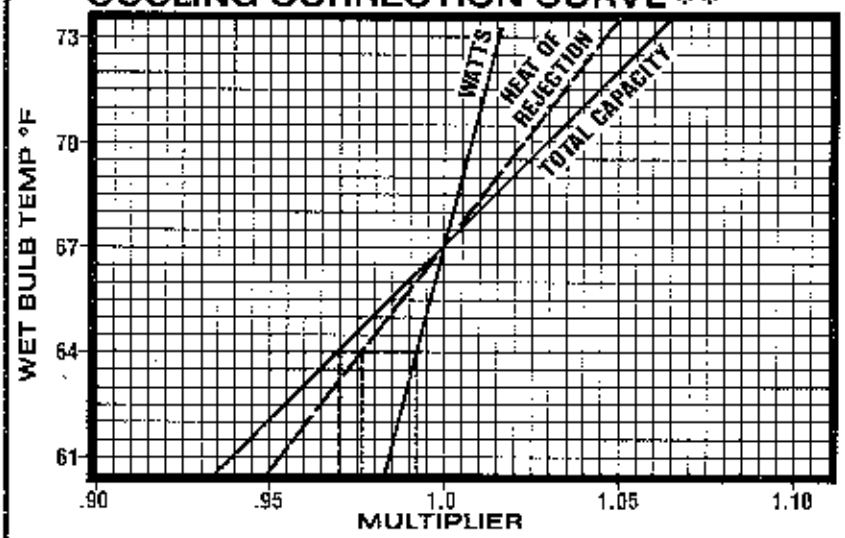

ARI RATING — COOLING

[1]NET BTUH	8000
POWER INPUT KW	.75
EER	10.7
HEAT OF REJ	10,443
WATER FLOW — GPM	2.1
CFM	350

[1]BASED ON: 80°F DB/67°F WB ENTERING AIR. 85°F EWT, 95°F LWT ACCORDING TO ARI STD 320-76.

SENSIBLE CAPACITY **

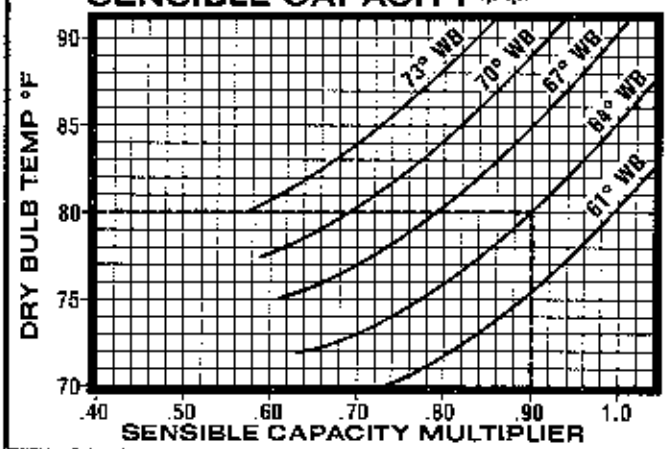

*BASED ON 80°F DB/67°F WB ENTERING AIR TEMP + 2.0 & 3.0 GPM COOLING PERFORMANCE EQUIVALENT.

**TO BE APPLIED AS MULTIPLIER TO CORRESPONDING VALUES OBTAINED FROM PERFORMANCE CURVE FOR A GIVEN WATER FLOW RATE AND ENTERING WATER TEMPERATURE

HEATING PERFORMANCE CURVE 801-08

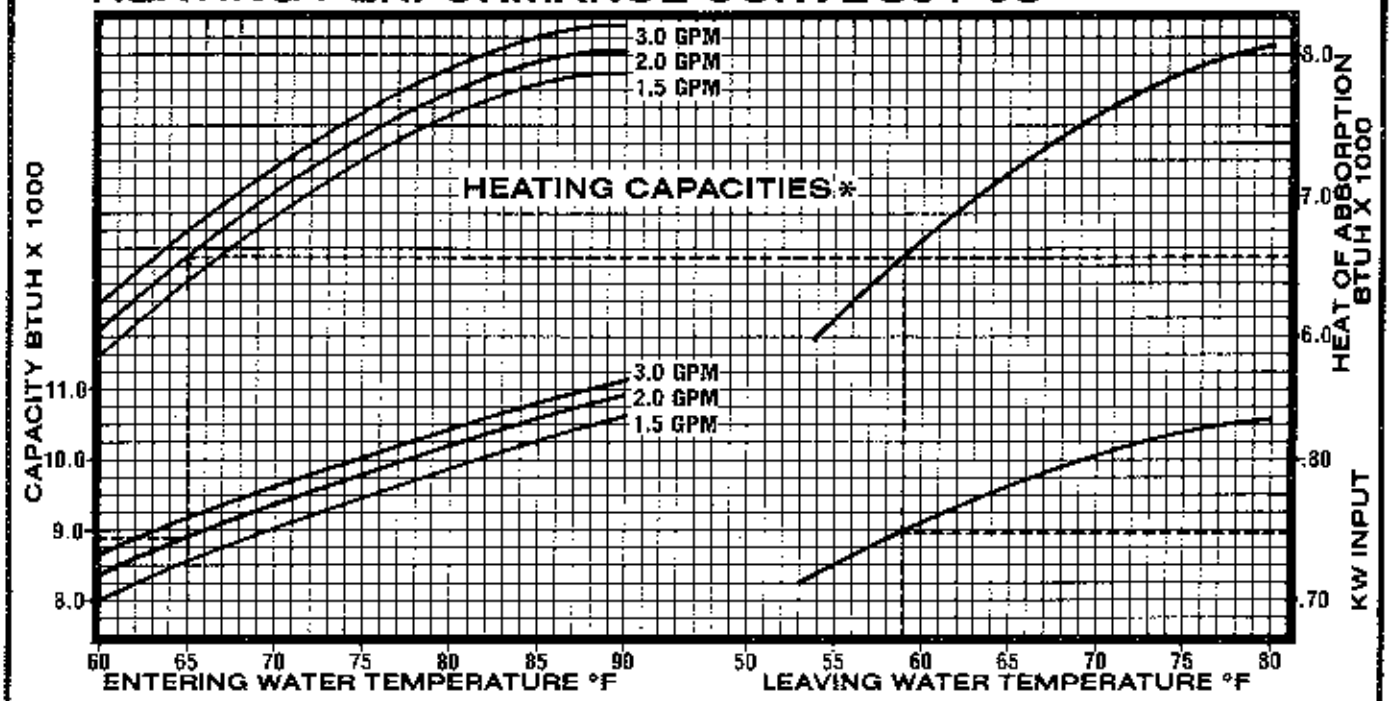

ARI RATING — HEATING

[1]NET BTUH	9400
POWER INPUT KW	.775
COP	3.6
HEAT OF ABSORB	6876
WATER FLOW — GPM	2.1
CFM	390

[1]BASED ON: 70°F DB ENTERING AIR 70°F EWT ACCORDING TO ARI STD 320-76.

HEATING PERFORMANCE CORRECTION FACTORS**

ENT AIR DRY BULB °F	CAPACITY	HEAT OF ABSORB	POWER INPUT
60	1.03	1.06	.925
65	1.015	1.03	0.96
70	1.00	1.00	1.00
75	0.98	0.96	1.04

*BASED ON 70°F ENTERING AIR TEMPERATURE.

**TO BE APPLIED AS MULTIPLIER TO CORRESPONDING VALUES OBTAINED FROM PERFORMANCE CURVE FOR A GIVEN WATER FLOW RATE AND ENTERING WATER TEMPERATURE

GENERAL DATA

ELECTRICAL DATA

VOLTS	PHASE	HZ	COMP RLA	COMP LRA	BL FLA	UNIT FLA	MIN WIRE SIZE	MAX FUSE SIZE
208/230	1	60	3.5	22.4	.45	4.0	#14	15A
265	1	60	3.0	19.0	.45	3.5	#14	15A

WATER PRESSURE DROP

GPM	1.0	1.5	2.0	2.5	3.0
FT. H_2O	.40	.85	2.3	4.2	6.5

AIR DELIVERY

BASED ON WET COIL & CLEAN FILTER

HS CFM/RPM	350/1040
LS CFM/RPM	320/1000

DATA CALCULATION EXAMPLE

SAMPLE PROBLEM — ESTIMATE THE PERFORMANCE OF MODEL 801-08 UNDER THE FOLLOWING CONDITIONS.

1. **COOLING MODE:** HIGH SPEED FAN, RETURN AIR AT 80°F DB/64°F WB, SUPPLY WATER TEMP 75°F, SUPPLY WATER RATE — 2.0 GPM.
2. **HEATING MODE:** IDENTICAL COOLING MODE CONDITIONS EXCEPT AIR TEMPERATURE IS 65°F.

SOLUTION	COOLING TOTAL CAP.	SENSIBLE CAPACITY	HEAT OF REJECT.	POWER	HEATING CAPACITY	HEAT OF ABSORB	POWER
FROM PERF. CURVE	8,450	8,450	10,765	.720	8,850	6,500	.745
	X	X	X	X	X	X	X
ENT. AIR MULTIPLIER FROM CORR. DATA	.97	.90	.9753	.993	1.015	1.03	.96
	=	=	=	=	=	=	=
CORRECTED PERFORMANCE	8,197	7,605	10,500	.715	8,983	6,695	.715

Friedrich® Climate Master Series **801-08** PERFORMANCE DATA & APPLICATION CURVES

—CERTIFICATIONS—

CONTINUING ENGINEERING RESEARCH RESULTS IN STEADY IMPROVEMENT. THEREFORE, THESE SPECIFICATIONS ARE SUBJECT TO CHANGE WITHOUT NOTICE. PRINTED IN U.S.A.

COOLING PERFORMANCE CURVE 801-10

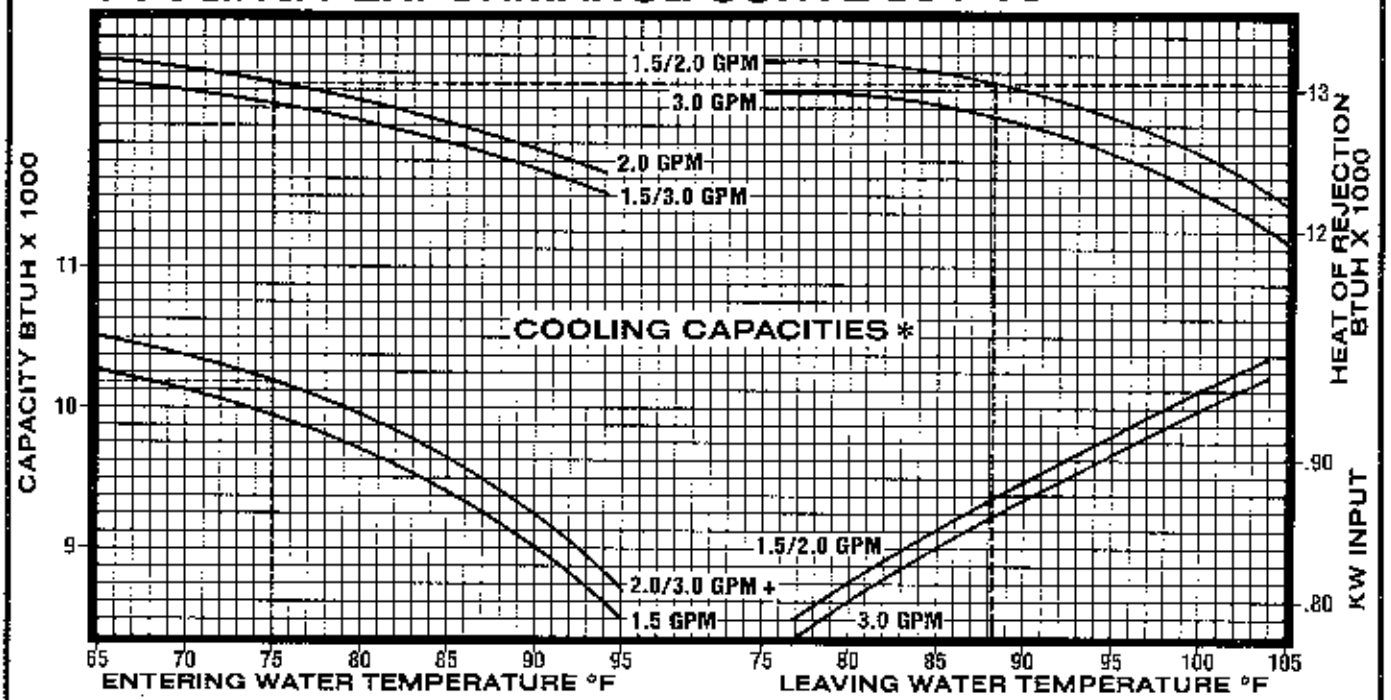

COOLING CORRECTION CURVE **

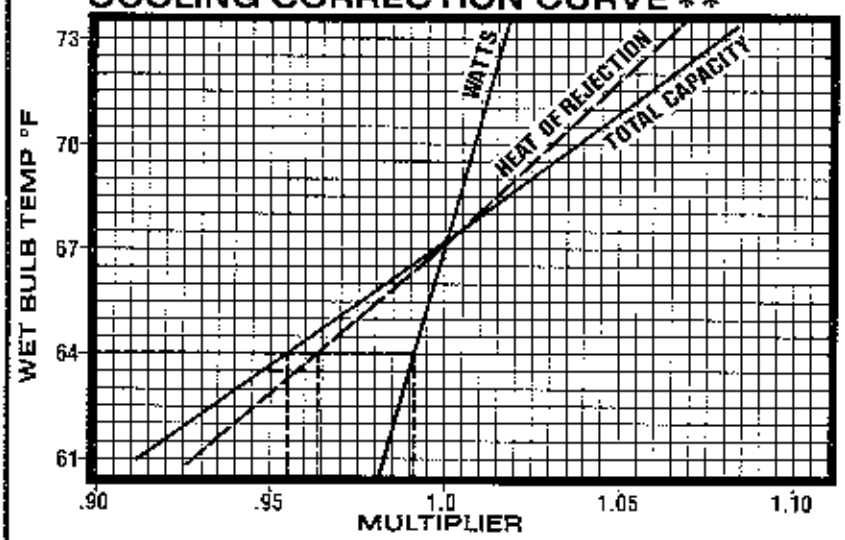

ARI RATING — COOLING

[1]NET BTUH	10,000
POWER INPUT KW	.90
EER	11.1
HEAT OF REJ	12,929
WATER FLOW — GPM	2.6
CFM	385

[1]BASED ON: 80°F DB/67°F WB ENTERING AIR. 85°F EWT, 95°F LWT ACCORDING TO ARI STD 320-76.

SENSIBLE CAPACITY **

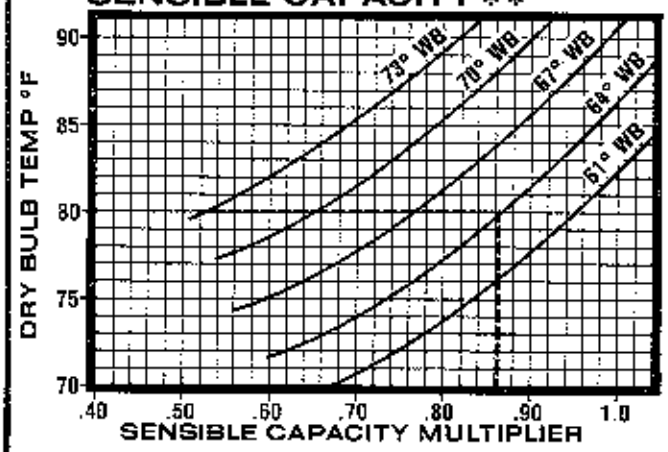

*BASED ON 80°F DB/67°F WB ENTERING AIR TEMP ÷ 2.0 & 3.0 GPM COOLING PERFORMANCE EQUIVALENT.

**TO BE APPLIED AS MULTIPLIER TO CORRESPONDING VALUES OBTAINED FROM PERFORMANCE CURVE FOR A GIVEN WATER FLOW RATE AND ENTERING WATER TEMPERATURE

HEATING PERFORMANCE CURVE 801-10

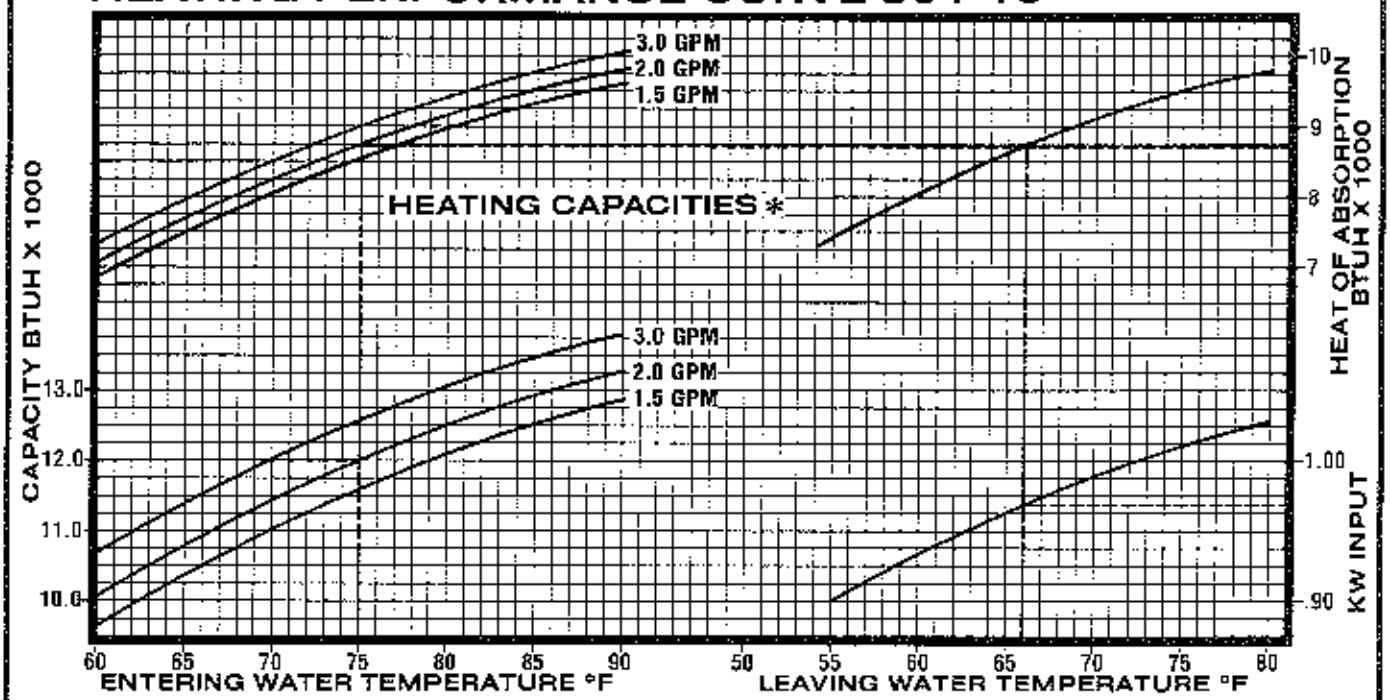

ARI RATING — HEATING

†NET BTUH	11,600
POWER INPUT KW	.95
COP	3.6
HEAT OF ABSORB	8508
WATER FLOW — GPM	2.6
CFM	415

†BASED ON: 70°F DB ENTERING AIR 70°F EWT ACCORDING TO ARI STD 320-76.

HEATING PERFORMANCE CORRECTION FACTORS * *

ENT AIR DRY BULB °F	CAPACITY	HEAT OF ABSORB	POWER INPUT
60	1.04	1.08	.930
65	1.02	1.04	.965
70	1.00	1.00	1.00
75	0.98	0.97	1.03

*BASED ON 70°F ENTERING AIR TEMPERATURE.

**TO BE APPLIED AS MULTIPLIER TO CORRESPONDING VALUES OBTAINED FROM PERFORMANCE CURVE FOR A GIVEN WATER FLOW RATE AND ENTERING WATER TEMPERATURE

GENERAL DATA

ELECTRICAL DATA

VOLTS	PHASE	HZ	COMP RLA	COMP LRA	BL FLA	UNIT FLA	MIN WIRE SIZE	MAX FUSE SIZE
208/230	1	60	4.4	21.3	.45	4.9	#14	15A
265	1	60	3.9	22.3	.45	4.4	#14	15A

WATER PRESSURE DROP

GPM	1.0	1.5	2.0	2.5	3.0
FT. H_2O	1.75	2.3	3.5	5.6	8.2

AIR DELIVERY

BASED ON WET COIL & CLEAN FILTER

HS CFM/RPM	385/1010
LS CFM/RPM	355/990

DATA CALCULATION EXAMPLE

SAMPLE PROBLEM — ESTIMATE THE PERFORMANCE OF MODEL 801-10 UNDER THE FOLLOWING CONDITIONS.

1. **COOLING MODE:** HIGH SPEED FAN, RETURN AIR AT 80°F DB/67°F WB, SUPPLY WATER TEMP 75°F, SUPPLY WATER RATE — 2.0 GPM.
2. **HEATING MODE:** IDENTICAL COOLING MODE CONDITIONS EXCEPT AIR TEMPERATURE IS 65°F.

SOLUTION	COOLING TOTAL CAP.	SENSIBLE CAPACITY	HEAT OF REJECT.	POWER	HEATING CAPACITY	HEAT OF ABSORB	POWER
FROM PERF. CURVE	10,180	10,180	13,100	.875	12,000	8,700	.970
	X	X	X	X	X	X	X
ENT. AIR MULTIPLIER FROM CORR. DATA	.955	.865	.964	.992	1.02	1.04	.965
	=	=	=	=	=	=	=
CORRECTED PERFORMANCE	9,722	8,806	12,628	.868	12,240	9,048	.936

Friedrich Climate Master Series | **801-10** | **PERFORMANCE DATA & APPLICATION CURVES**

— CERTIFICATIONS —

CONTINUING ENGINEERING RESEARCH RESULTS IN STEADY IMPROVEMENT. THEREFORE, THESE SPECIFICATIONS ARE SUBJECT TO CHANGE WITHOUT NOTICE. PRINTED IN U.S.A.

265V — 801-08, 10

4 BUTTON MANUAL CHANGE OVER

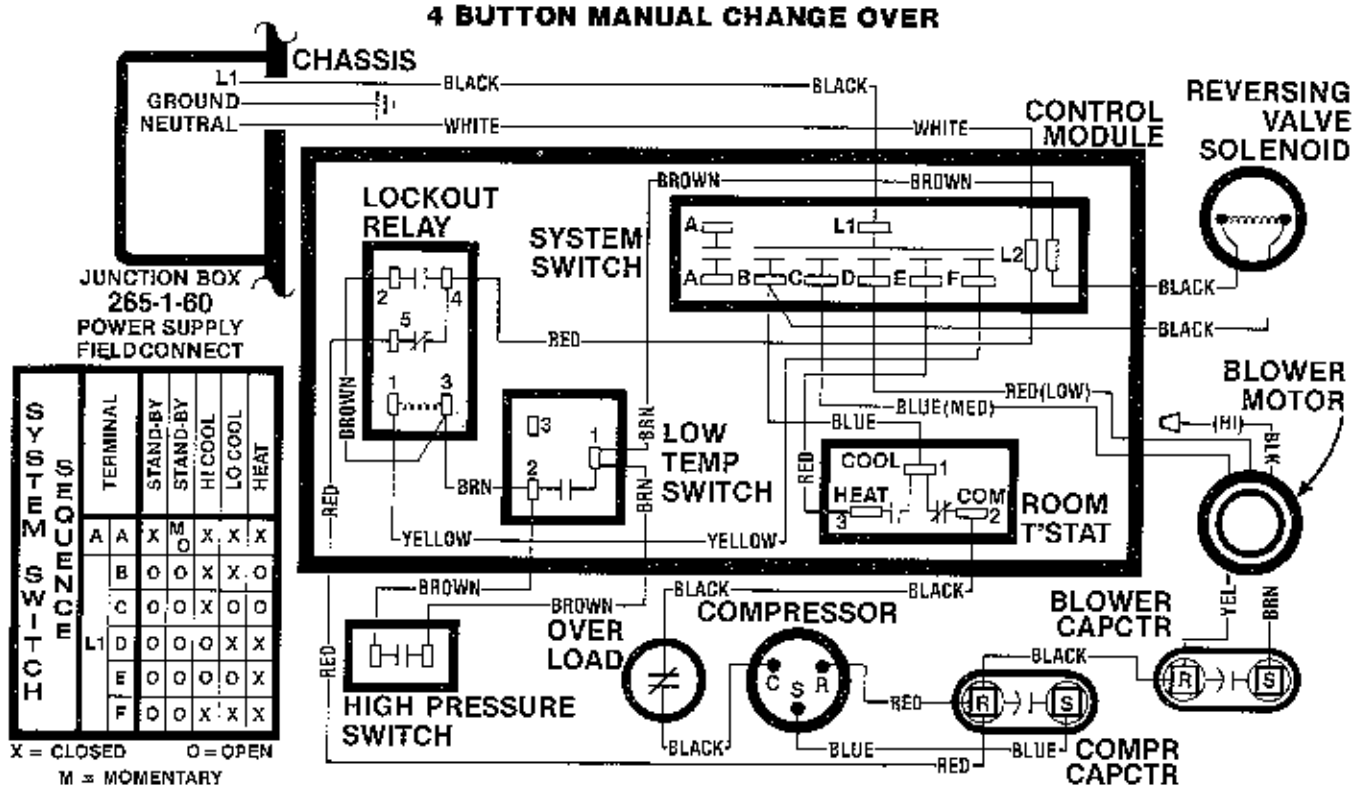

SYSTEM SWITCH SEQUENCE	TERMINAL	STAND-BY	STAND-BY	HI COOL	LO COOL	HEAT
A	A	X	M O	X	X	X
	B	O	O	X	X	O
	C	O	O	X	O	O
L1	D	O	O	O	X	X
	E	O	O	O	O	X
	F	O	O	X	X	X

X = CLOSED O = OPEN
M = MOMENTARY

208/230V — 801-08, 10

4 BUTTON MANUAL CHANGE OVER

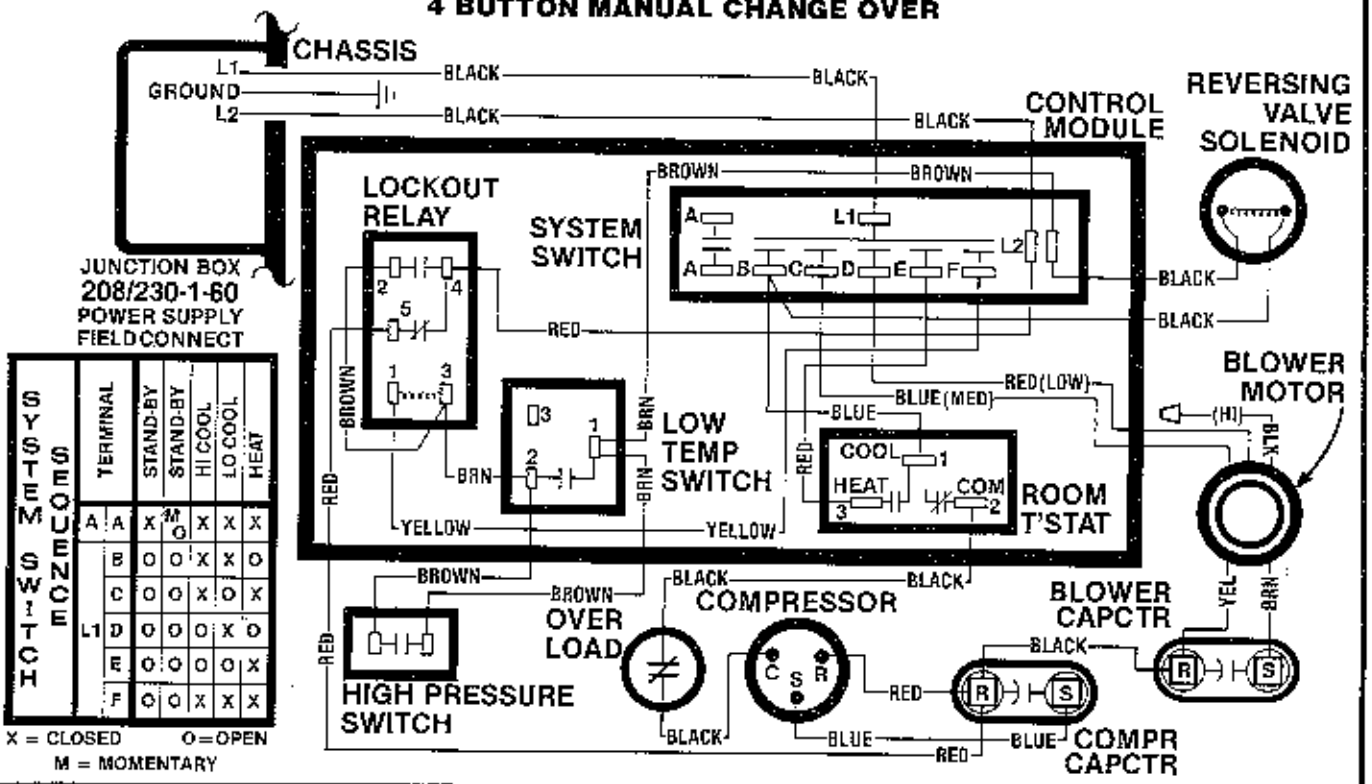

SYSTEM SWITCH SEQUENCE	TERMINAL	STAND-BY	STAND-BY	HI COOL	LO COOL	HEAT
A	A	X	M O	X	X	X
	B	O	O	X	X	O
	C	O	O	X	O	X
L1	D	O	O	O	X	O
	E	O	O	O	O	X
	F	O	O	X	X	X

X = CLOSED O = OPEN
M = MOMENTARY

Friedrich® Climate Master Series

801-08, 10

WIRING DIAGRAM 1 PH/60 HZ

— CERTIFICATIONS —

1/80

CONTINUING ENGINEERING RESEARCH RESULTS IN STEADY IMPROVEMENT. THEREFORE, THESE SPECIFICATIONS ARE SUBJECT TO CHANGE WITHOUT NOTICE
PRINTED IN U.S.A.

FCM 801-08 & 10-D

2 BUTTON AUTOMATIC CHANGE OVER WITH SECURITY GUARD AND NITE-SET BACK

208/230V 801-08, 10

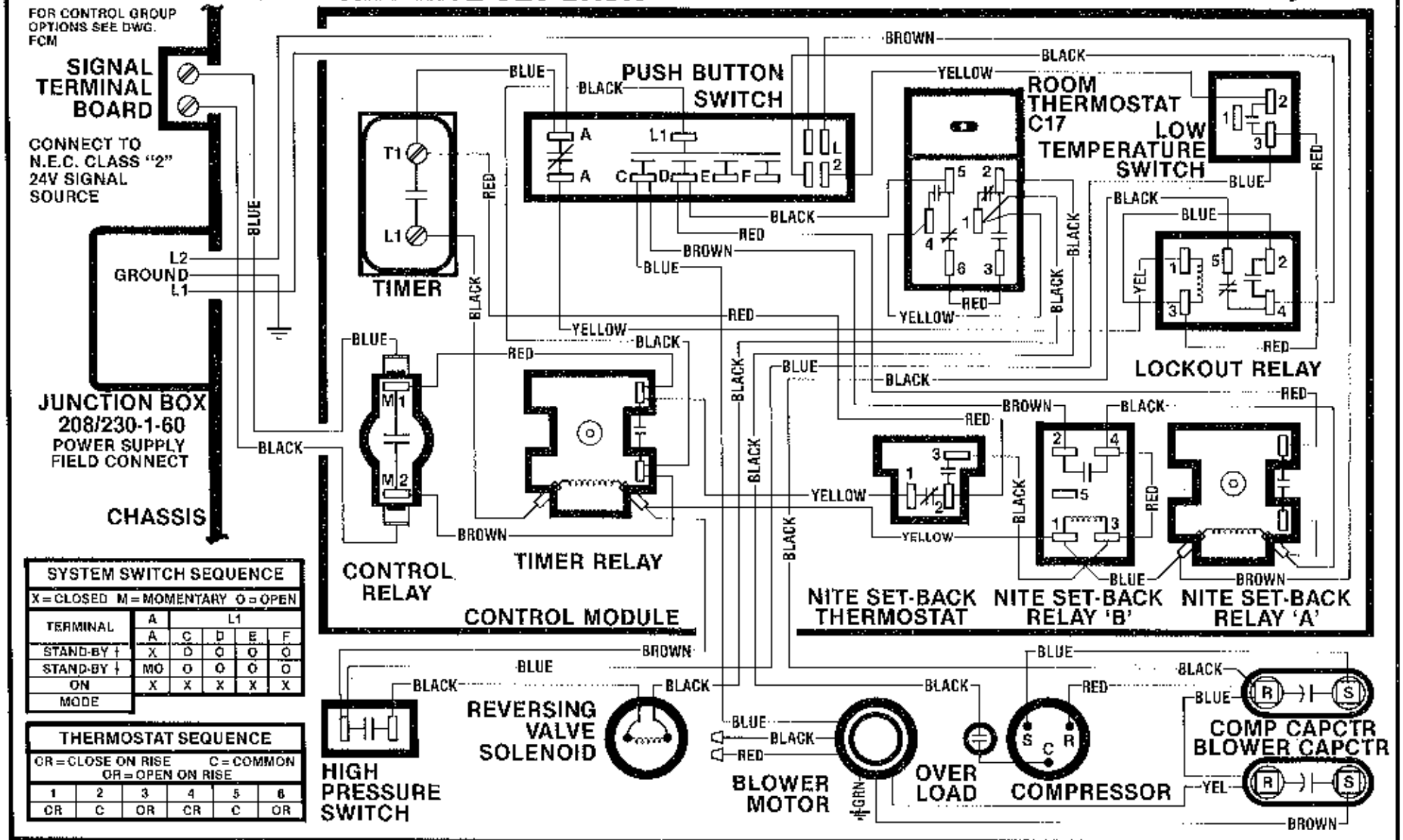

SYSTEM SWITCH SEQUENCE					
X = CLOSED M = MOMENTARY O = OPEN					
TERMINAL	A	L1			
	A	C	D	E	F
STAND-BY †	X	O	O	O	O
STAND-BY ‡	MO	O	O	O	O
ON	X	X	X	X	X
MODE					

THERMOSTAT SEQUENCE					
CR = CLOSE ON RISE C = COMMON OR = OPEN ON RISE					
1	2	3	4	5	6
CR	C	OR	CR	C	OR

Friedrich® Climate Master Series

801-08, 10

WIRING DIAGRAM 208/230V/1PH/60HZ

CERTIFICATIONS

3/80

CONTINUING ENGINEERING RESEARCH RESULTS IN STEADY IMPROVEMENT. THEREFORE, THESE SPECIFICATIONS ARE SUBJECT TO CHANGE WITHOUT NOTICE. PRINTED IN U.S.A.

FCM 801-08&10-D1

2 BUTTON AUTOMATIC CHANGE OVER WITH SECURITY GUARD AND NITE-SET BACK

265V 801-08,10

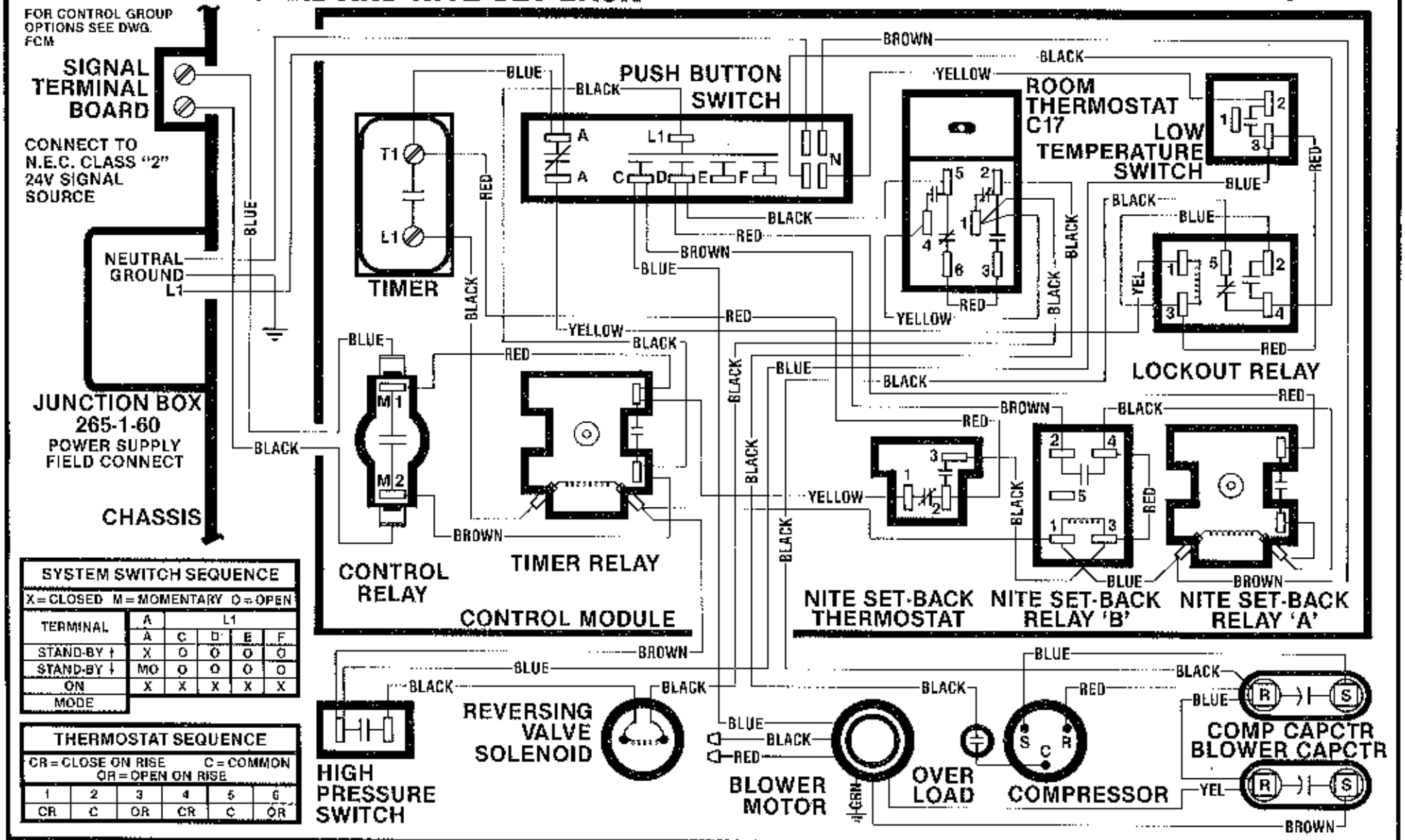

SYSTEM SWITCH SEQUENCE					
X = CLOSED M = MOMENTARY O = OPEN					
TERMINAL	A	L1			
	A	C	D	E	F
STAND-BY ↑	X	O	O	O	O
STAND-BY ↓	MO	O	O	O	O
ON	X	X	X	X	X
MODE					

THERMOSTAT SEQUENCE					
CR = CLOSE ON RISE OR = OPEN ON RISE				C = COMMON	
1	2	3	4	5	6
CR	C	OR	CR	C	OR

Friedrich® Climate Master Series

801-08, 10

WIRING DIAGRAM 265V/1PH/60HZ

CERTIFICATIONS 3/80

COMMITTING ENGINEERING RESEARCH RESULTS IN STEADY IMPROVEMENT. THEREFORE, THESE SPECIFICATIONS ARE SUBJECT TO CHANGE WITHOUT NOTICE. PRINTED IN U.S.A.

FCM 801-08&10-D2

COOLING PERFORMANCE CURVE 801-12

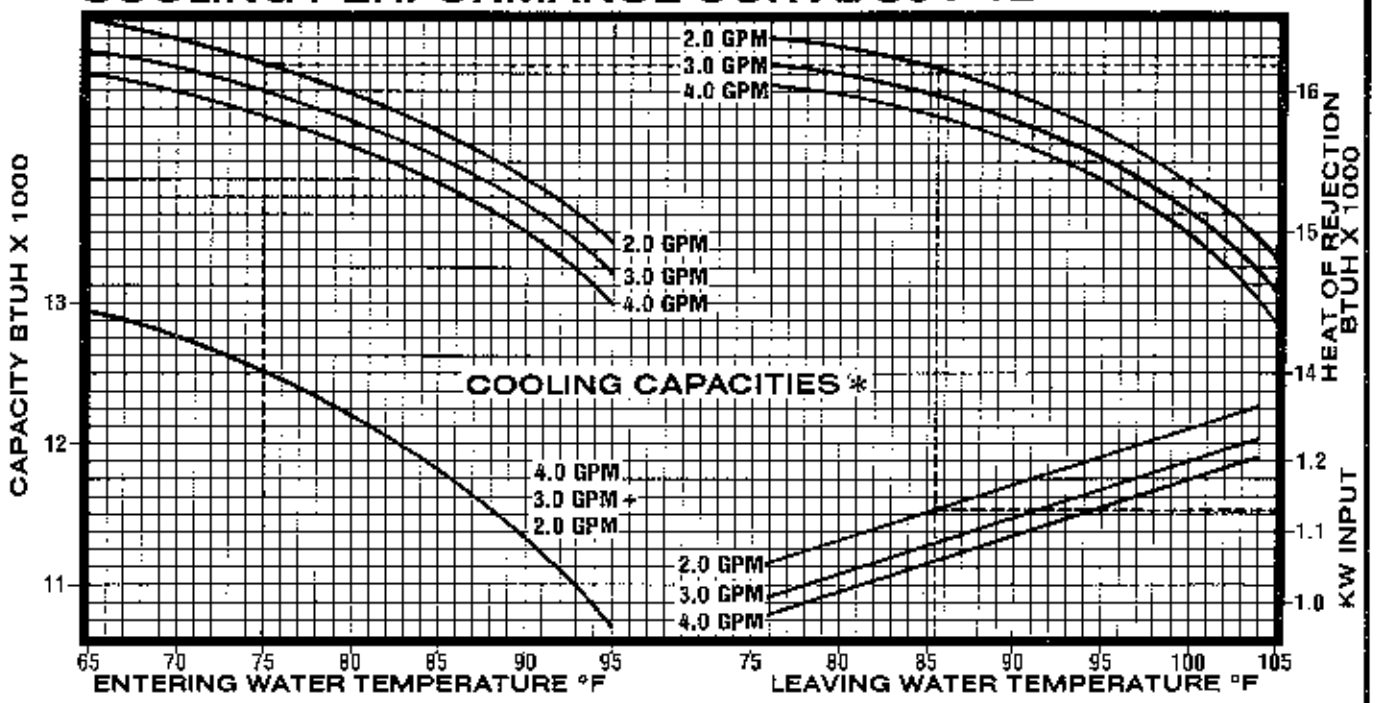

COOLING CORRECTION CURVE **

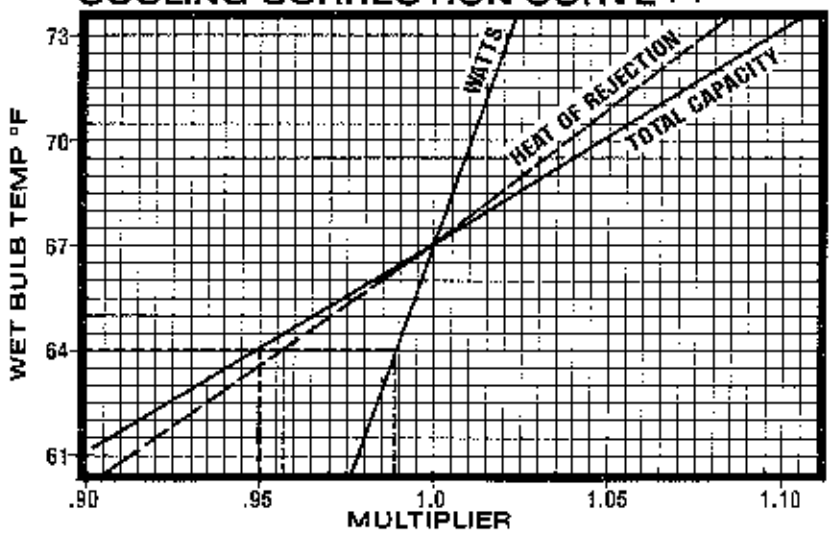

ARI RATING — COOLING

[1]NET BTUH	11,900
POWER INPUT KW	1.15
EER	10.3
HEAT OF REJ	15,643
WATER FLOW — GPM	3.2
CFM	375

[1]BASED ON: 80°F DB/67°F WB ENTERING AIR. 85°F EWT, 95°F LWT ACCORDING TO ARI STD 320-76.

SENSIBLE CAPACITY **

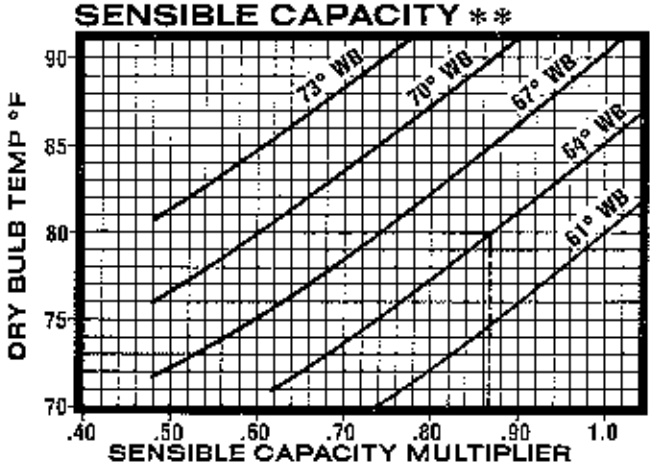

*BASED ON 80°F DB/67°F WB ENTERING AIR TEMP + 2.0, 3.0 & 4.0 GPM COOLING PERFORMANCE EQUIVALENT.

**TO BE APPLIED AS MULTIPLIER TO CORRESPONDING VALUES OBTAINED FROM PERFORMANCE CURVE FOR A GIVEN WATER FLOW RATE AND ENTERING WATER TEMPERATURE

Friedrich Climate Master Series

801-12

PERFORMANCE DATA & APPLICATION CURVES

—CERTIFICATIONS—

CONTINUING ENGINEERING RESEARCH RESULTS IN STEADY IMPROVEMENT. THEREFORE, THESE SPECIFICATIONS ARE SUBJECT TO CHANGE WITHOUT NOTICE.
PRINTED IN U.S.A.

HEATING PERFORMANCE CURVE 801-12

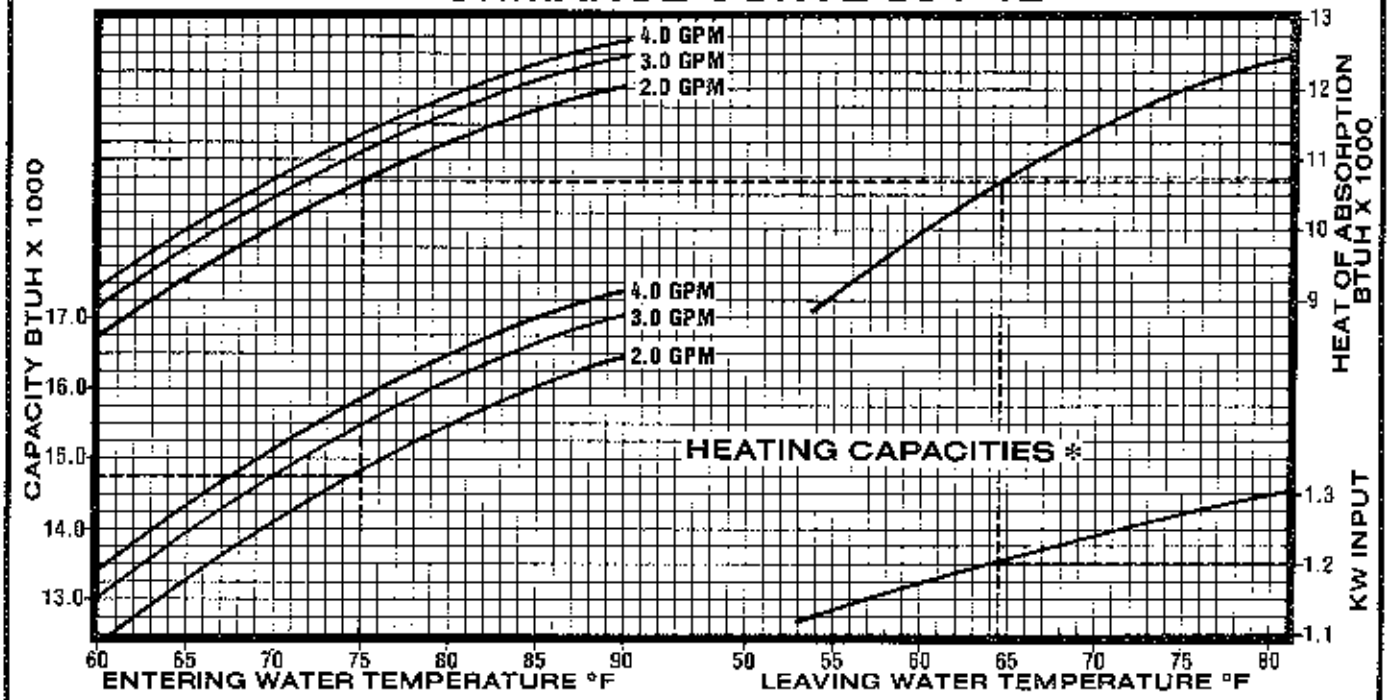

ARI RATING — HEATING

[1]NET BTUH	14,800
POWER INPUT KW	1.2
COP	3.6
HEAT OF ABSORB	10,895
WATER FLOW — GPM	3.2
CFM	440

[1]BASED ON: 70°F DB ENTERING AIR 70°F EWT ACCORDING TO ARI STD 320-76.

HEATING PERFORMANCE CORRECTION FACTORS **

ENT AIR DRY BULB °F	CAPACITY	HEAT OF ABSORB	POWER INPUT
60	1.02	1.046	.913
65	1.01	1.02	.96
70	1.00	1.00	1.00
75	0.98	0.97	1.02

*BASED ON 70°F ENTERING AIR TEMPERATURE.

**TO BE APPLIED AS MULTIPLIER TO CORRESPONDING VALUES OBTAINED FROM PERFORMANCE CURVE FOR A GIVEN WATER FLOW RATE AND ENTERING WATER TEMPERATURE

GENERAL DATA

ELECTRICAL DATA

VOLTS	PHASE	HZ	COMP RLA	COMP LRA	BL FLA	UNIT FLA	MIN WIRE SIZE	MAX FUSE SIZE
208/230	1	60	5.7	28.0	.45	6.2	#14	15A
265	1	60	5.0	27.4	.45	5.5	#14	15A

WATER PRESSURE DROP

GPM	2.0	2.5	3.0	3.5	4.0
FT. H_2O	4.6	6.9	13.9	15.6	17.3

AIR DELIVERY

BASED ON WET COIL & CLEAN FILTER

HS CFM/RPM	375/1130
LS CFM/RPM	350/1035

DATA CALCULATION EXAMPLE

SAMPLE PROBLEM — ESTIMATE THE PERFORMANCE OF MODEL 801-12 UNDER THE FOLLOWING CONDITIONS.

1. **COOLING MODE:** HIGH SPEED FAN, RETURN AIR AT 80°F DB/67°F WB, SUPPLY WATER TEMP 75°F, SUPPLY WATER RATE — 2.0 GPM.
2. **HEATING MODE:** IDENTICAL COOLING MODE CONDITIONS EXCEPT AIR TEMPERATURE IS 65°F.

SOLUTION	COOLING TOTAL CAP.	SENSIBLE CAPACITY	HEAT OF REJECT.	POWER	HEATING CAPACITY	HEAT OF ABSORB	POWER
FROM PERF. CURVE	12,500	12,500	16,150	1.13	14,750	10,700	1200
	X	X	X	X	X	X	X
ENT. AIR MULTIPLIER FROM CORR. DATA	.95	.87	.9575	.989	1.01	1.02	.96
	=	=	=	=	=	=	=
CORRECTED PERFORMANCE	11,875	10,875	15,464	1.118	10,898	10,914	1152

Friedrich Climate Master Series | **801-12** | **PERFORMANCE DATA & APPLICATION CURVES**

— CERTIFICATIONS —

CONTINUING ENGINEERING RESEARCH RESULTS IN STEADY IMPROVEMENT. THEREFORE, THESE SPECIFICATIONS ARE SUBJECT TO CHANGE WITHOUT NOTICE.
PRINTED IN U.S.A.

265V — 801-12

4 BUTTON MANUAL CHANGE OVER

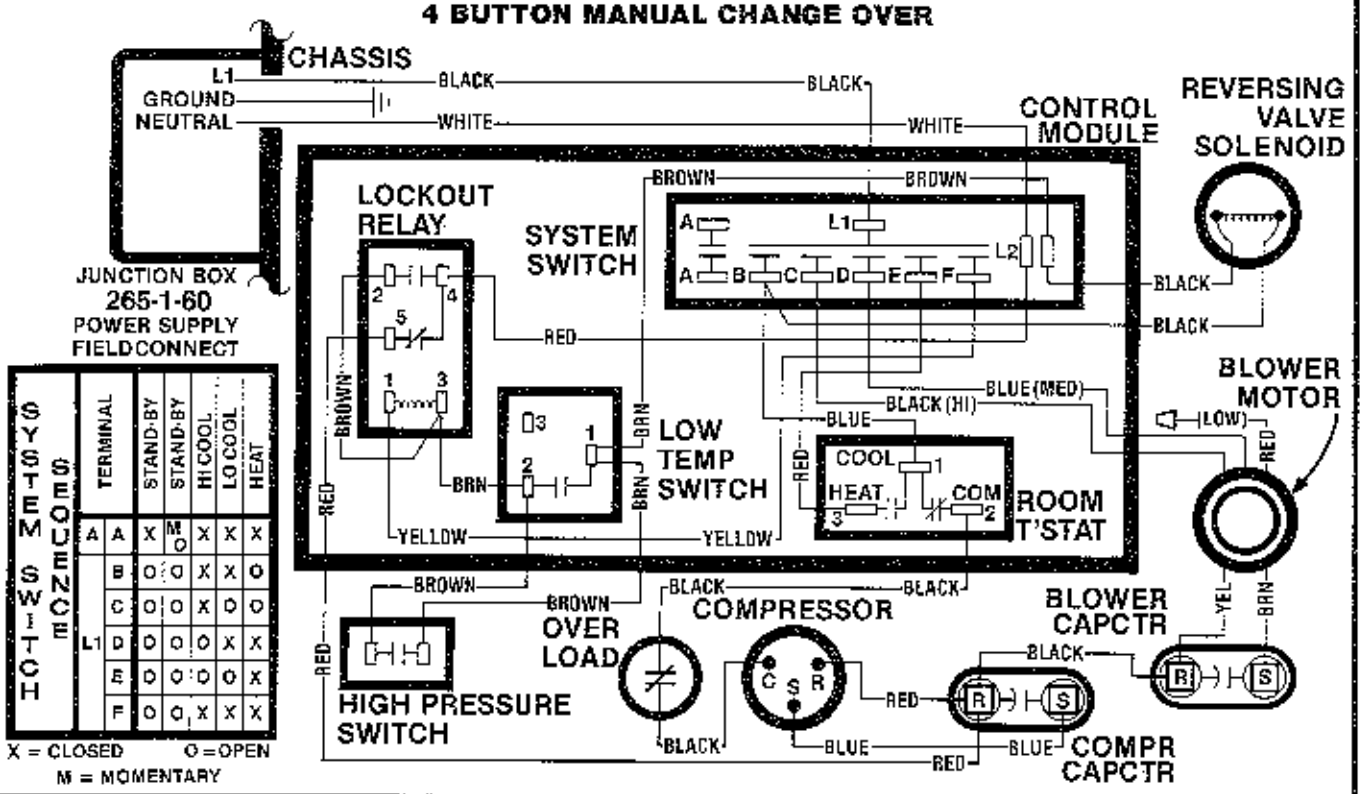

SYSTEM SWITCH SEQUENCE	TERMINAL	STAND-BY	STAND-BY	HI COOL	LO COOL	HEAT
A A		X	M O	X	X	X
L1 B		O	O	X	X	O
L1 C		O	O	X	O	O
L1 D		O	O	O	X	X
L1 E		O	O	O	O	X
L1 F		O	O	X	X	X

X = CLOSED O = OPEN
M = MOMENTARY

208/230V — 801-12

4 BUTTON MANUAL CHANGE OVER

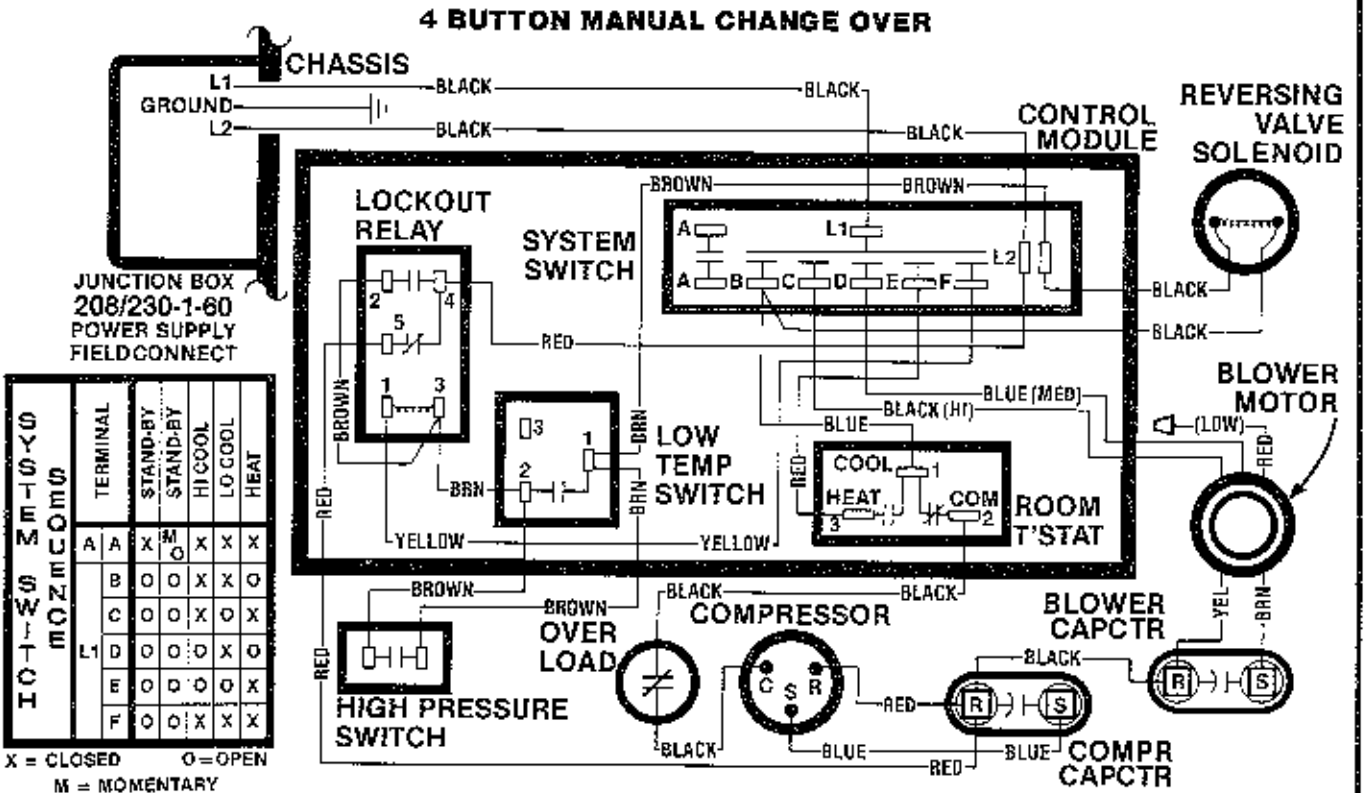

SYSTEM SWITCH SEQUENCE	TERMINAL	STAND-BY	STAND-BY	HI COOL	LO COOL	HEAT
A A		X	M O	X	X	X
L1 B		O	O	X	X	O
L1 C		O	O	X	O	X
L1 D		O	O	O	X	O
L1 E		O	O	O	O	X
L1 F		O	O	X	X	X

X = CLOSED O = OPEN
M = MOMENTARY

Friedrich Climate Master Series

801-12

WIRING DIAGRAM 1 PH/60 HZ

— CERTIFICATIONS —

1/80

CONTINUING ENGINEERING RESEARCH RESULTS IN STEADY IMPROVEMENT. THEREFORE, THESE SPECIFICATIONS ARE SUBJECT TO CHANGE WITHOUT NOTICE.
PRINTED IN U.S.A.

FCM 801-12-D