CLIMATEMASTER®

SERIES:	GSW -R407c
HZ:	50
UNIT OF MEAS:	SI
LANG:	ENGLISH

Contractor: *P.O.:*

Engineer:

Project Name: *Unit Tag:*

GSW Series Water to Water Submittal Data

Models GSW 036, 060 & 120

50 Hz - R407c

English Language / SI Units

RELEASE: 04/16/02

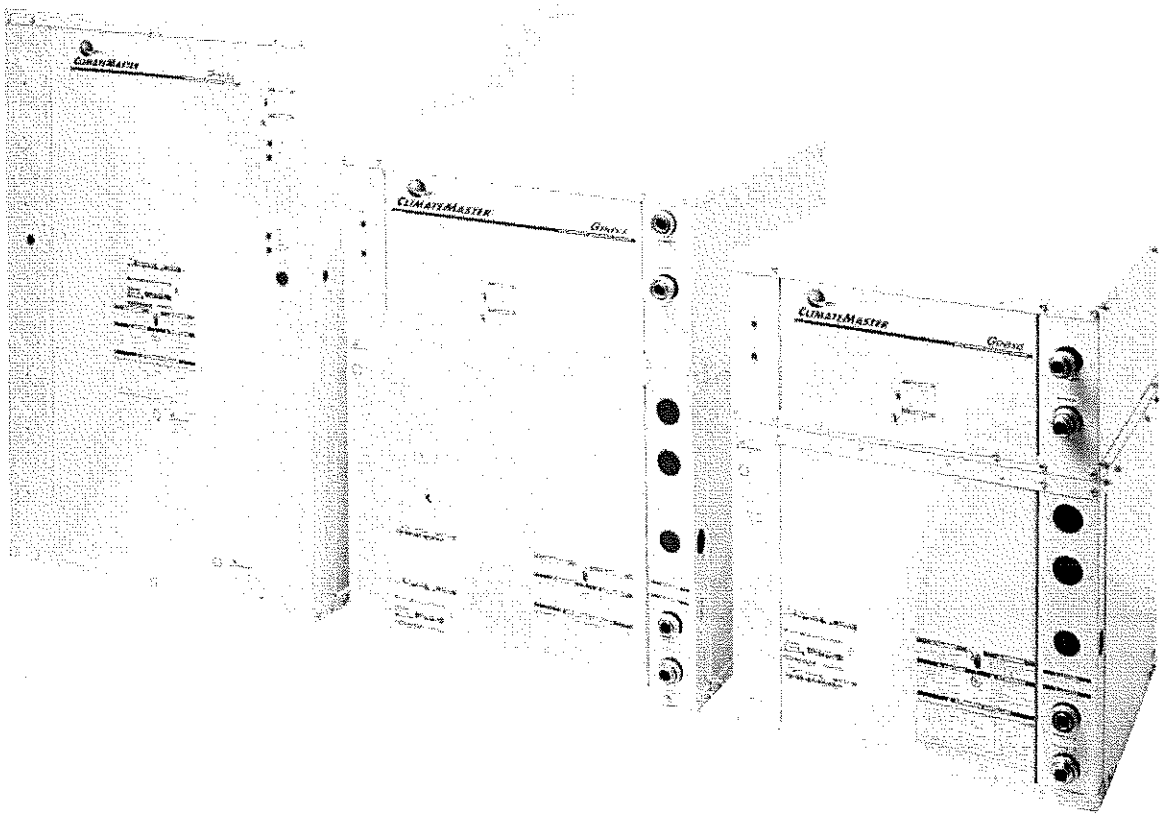

ClimateMaster works continually to improve its products. As a result, the design and specifications of each product at the time of order may be changed without notice and may not be as described herein. Please contact ClimateMaster's Customer Service Department at 1-405-745-6000 for specific information on the current design and specifications. Statements and other information contained herein are not express warranties and do not form the basis of any bargain between the parties, but are merely ClimateMaster's opinion or commendation of its products. The latest version of this document is available at www.climatemaster.com.

GSW Series 50Hz - R407c Submittal Data Eng/SI

CLIMATEMASTER®

Contractor:	*P.O.:*
Engineer:	
Project Name:	*Unit Tag:*

MODEL DECODER

GS W 036 A U F 1 0 C F C S

Model Type
GS = Genesis Series High Efficiency

Configuration
W = Water-to-Water

Unit Size, Nominal kbtuh
036
060
120

Revision Level
A = Current

Voltage & Refrigerant
V = 220-240 / 50 / 1 - R22
U = 380-420 / 50 / 3 - R22
T = 220-240 / 50 / 1 - R407C
S = 380-420 / 50 / 3 - R407C

Controls & Agency Listing
C = CXM Controller
D = DXM Controller
L = CXM w/Lonworks
M = DXM w/Lonworks
F = CXM - CE Mark
G = DXM - CE Mark
H = CXM w/Lonworks - CE Mark
J = DXM w/Lonworks - CE Mark

Cabinet Insulation
1 = Extended Range
2 = Extended Range w/UltraQuiet

Hot Water Generator Options
0 = None
1 = Hot Water Generator coil & pump - 036 & 060 only
2 = Hot Water Generator coil only

Source Water Coil Options
C = Copper
N = Cupro-Nickel

Water Connection Location
F = Front
R = Right, 120 only
L = Left, 120 only
B = Back, 120 only

Load Water Coil Options
C = Copper
N = Cupro-Nickel
V = Double Wall Vented

Standard
S = Standard

NOTE: R407c units only available with CE Mark Controls (Controls and Agency Listing Codes F, G, H, and J).

ClimateMaster works continually to improve its products. As a result, the design and specifications of each product at the time of order may be changed without notice and may not be as described herein. Please contact ClimateMaster's Customer Service Department at 1-405-745-6000 for specific information on the current design and specifications. Statements and other information contained herein are not express warranties and do not form the basis of any bargain between the parties, but are merely ClimateMaster's opinion or commendation of its products. The latest version of this document is available at www.climatemaster.com.

GSW Series 50Hz - R407c Submittal Data Eng/SI

CLIMATEMASTER®

ARI/ISO/ASHRAE
PERFORMANCE DATA

Contractor:	*P.O.:*
Engineer:	
Project Name:	*Unit Tag:*

Data is presented in accordance with ,but not certified by ARI/ISO/ASHRAE 13256-1

ARI/ASHRAE/ISO 13256-2
Metric (SI) Units

Model	Indoor Liquid Flow (lps)	Outdoor Liquid Flow (lps)	Water Loop Heat Pump				Ground Water Heat Pump				Ground Loop Heat Pump			
			Cooling		Heating		Cooling		Heating		Cooling		Heating	
			Indoor 12°C Outdoor 30°C		Indoor 40°C Outdoor 20°C		Indoor 12°C Outdoor 15°C		Indoor 40°C Outdoor 10°C		Indoor 12°C Outdoor 25°C		Indoor 40°C Outdoor 0°C	
			Capacity Watts	EER (W/W)	Capacity Watts	COP	Capacity Watts	EER (W/W)	Capacity Watts	COP	Capacity Watts	EER (W/W)	Capacity Watts	COP
GSW036	0.57	0.57	7,760	4.3	10,320	4.4	8,400	6.5	8,100	3.5	7,990	5.0	6,450	2.8
GSW060	0.95	0.95	12,230	3.8	15,690	4.1	12,400	5.1	14,600	3.6	12,300	4.2	12,020	3.0
GSW120	1.89	1.89	24,360	3.7	31,440	4.0	24,710	4.9	26,790	3.5	24,510	4.1	21,210	2.9

All ratings based upon 208V operation

Rev.: 04/10/02 B

Indoor coil also called "Load" and Outdoor coil also called "Source"

ARI/ASHRAE/ISO 13256-2
English (IP) Units

Model	Indoor Liquid Flow (gpm)	Outdoor Liquid Flow (gpm)	Water Loop Heat Pump				Ground Water Heat Pump				Ground Loop Heat Pump			
			Cooling		Heating		Cooling		Heating		Cooling		Heating	
			Indoor 53.6°F Outdoor 86°F		Indoor 104°F Outdoor 68°F		Indoor 53.6°F Outdoor 59°F		Indoor 104°F Outdoor 50°F		Indoor 53.6°F Outdoor 77°F		Indoor 104°F Outdoor 32°F	
			Capacity Btuh	EER Btuh/W	Capacity Btuh	COP	Capacity Btuh	EER Btuh/W	Capacity Btuh	COP	Capacity Btuh	EER Btuh/W	Capacity Btuh	COP
GSW036	9.03	9.03	26,477	14.7	35,212	4.4	28,661	22.2	27,637	3.5	27,262	17.1	22,007	2.8
GSW060	15.06	15.06	41,729	12.0	53,534	4.1	42,309	12.0	49,815	3.6	41,968	12.0	41,012	3.0
GSW120	29.95	29.95	83,116	11.6	107,273	4.0	84,311	11.6	91,407	3.5	83,628	11.6	72,369	2.9

All ratings based upon 208V operation

Rev.: 04/10/02 B

Indoor coil also called "Load" and Outdoor coil also called "Source"

cfm*0.472 = l/s
gpm*0.0631 = l/s
in wg*249 = pascals
ft of hd *2990 = pascals

ClimateMaster works continually to improve its products. As a result, the design and specifications of each product at the time of order may be changed without notice and may not be as described herein. Please contact ClimateMaster's Customer Service Department at 1-405-745-6000 for specific information on the current design and specifications. Statements and other information contained herein are not express warranties and do not form the basis of any bargain between the parties, but are merely ClimateMaster's opinion or commendation of its products. The latest version of this document is available at www.climatemaster.com.

GSW Series 50Hz - R407c Submittal Data Eng/SI

CLIMATEMASTER®

PERFORMANCE DATA
GSW036 COOLING

Contractor: *P.O.:*

Engineer:

Project Name: *Unit Tag:*

SOURCE			LOAD																			
ESWT	Flow	WPD	ELWT	Flow 0.32 l/s						Flow 0.44 l/s						Flow 0.57 l/s					
°C	l/s	kPa	°C	TC kW	PI kW	HR kW	LWT °C	EER W/W	WPD kPa	TC kW	PI kW	HR kW	LWT °C	EER W/W	WPD kPa	TC kW	PI kW	HR kW	LWT °C	EER W/W	WPD kPa
10	0.32	18.2	10	7.5	1.10	8.6	4.3	6.78	15.9	7.8	1.11	8.9	5.8	7.08	25.4	8.0	1.11	9.1	6.6	7.25	36.8
			15	8.5	1.11	9.6	8.6	7.62	13.6	8.9	1.12	10.0	10.2	7.93	23.1	9.1	1.12	10.2	11.2	8.10	34.9
			20	9.4	1.13	10.6	12.8	8.38	11.0	9.8	1.13	11.0	14.7	8.68	20.0	10.1	1.14	11.2	15.8	8.85	31.5
			25	10.3	1.14	11.5	17.2	9.06	10.6	10.7	1.15	11.9	19.2	9.34	19.2	11.0	1.15	12.1	20.4	9.51	29.8
			30	11.2	1.16	12.3	21.5	9.65	9.0	11.5	1.16	12.7	23.8	9.91	17.2	11.8	1.17	12.9	25.0	10.06	26.7
	0.44	28.2	10	7.6	1.05	8.6	4.3	7.21	15.9	7.9	1.05	9.0	5.7	7.52	25.4	8.1	1.06	9.2	6.6	7.71	36.8
			15	8.6	1.06	9.7	8.5	8.10	13.6	9.0	1.07	10.0	10.1	8.43	23.1	9.2	1.07	10.3	11.1	8.61	34.9
			20	9.6	1.07	10.6	12.7	8.91	11.0	10.0	1.08	11.0	14.6	9.23	20.0	10.2	1.08	11.3	15.7	9.41	31.5
			25	10.5	1.09	11.6	17.1	9.63	10.6	10.9	1.09	12.0	19.1	9.94	19.2	11.1	1.10	12.2	20.3	10.11	29.8
			30	11.3	1.10	12.4	21.4	10.26	9.0	11.7	1.11	12.8	23.7	10.54	17.2	11.9	1.11	13.0	25.0	10.70	26.7
	0.57	41.3	10	7.6	1.02	8.7	4.2	7.51	15.9	8.0	1.02	9.0	5.7	7.84	25.4	8.2	1.02	9.2	6.5	8.03	36.8
			15	8.7	1.03	9.7	8.4	8.44	13.6	9.1	1.03	10.1	10.1	8.78	23.1	9.3	1.04	10.3	11.1	8.98	34.9
			20	9.7	1.04	10.7	12.7	9.28	11.0	10.1	1.05	11.1	14.5	9.62	20.0	10.3	1.05	11.3	15.7	9.81	31.5
			25	10.6	1.05	11.6	17.0	10.03	10.6	11.0	1.06	12.0	19.1	10.35	19.2	11.2	1.06	12.3	20.3	10.53	29.8
			30	11.4	1.07	12.5	21.4	10.69	9.0	11.8	1.07	12.9	23.6	10.99	17.2	12.0	1.08	13.1	24.9	11.15	26.7
20	0.32	16.0	10	7.1	1.40	8.5	4.6	5.09	15.9	7.4	1.40	8.8	6.0	5.32	25.4	7.7	1.40	9.1	6.8	5.46	36.8
			15	8.1	1.41	9.6	8.8	5.78	13.6	8.5	1.41	9.9	10.4	6.02	23.1	8.7	1.42	10.2	11.3	6.16	34.9
			20	9.1	1.42	10.5	13.1	6.40	11.0	9.5	1.43	10.9	14.9	6.64	20.0	9.7	1.44	11.2	15.9	6.77	31.5
			25	10.0	1.44	11.5	17.4	6.94	10.6	10.4	1.45	11.9	19.4	7.17	19.2	10.6	1.46	12.1	20.5	7.29	29.8
			30	10.8	1.46	12.3	21.8	7.41	9.0	11.2	1.47	12.7	23.9	7.61	17.2	11.4	1.48	12.9	25.2	7.71	26.7
	0.44	25.1	10	7.2	1.33	8.5	4.6	5.41	15.9	7.5	1.33	8.9	5.9	5.66	25.4	7.7	1.33	9.1	6.7	5.81	36.8
			15	8.2	1.34	9.6	8.7	6.15	13.6	8.6	1.35	10.0	10.3	6.40	23.1	8.8	1.35	10.2	11.3	6.55	34.9
			20	9.2	1.36	10.6	13.0	6.81	11.0	9.6	1.36	11.0	14.8	7.06	20.0	9.8	1.37	11.2	15.9	7.20	31.5
			25	10.1	1.37	11.5	17.3	7.38	10.6	10.5	1.38	11.9	19.3	7.62	19.2	10.8	1.39	12.1	20.5	7.75	29.8
			30	11.0	1.39	12.4	21.7	7.88	9.0	11.4	1.40	12.8	23.9	8.09	17.2	11.6	1.41	13.0	25.1	8.20	26.7
	0.57	37.5	10	7.3	1.29	8.5	4.5	5.64	15.9	7.6	1.29	8.9	5.9	5.90	25.4	7.8	1.29	9.1	6.7	6.05	36.8
			15	8.3	1.30	9.6	8.7	6.41	13.6	8.7	1.31	10.0	10.3	6.67	23.1	8.9	1.31	10.2	11.2	6.83	34.9
			20	9.3	1.31	10.6	12.9	7.09	11.0	9.7	1.32	11.0	14.7	7.36	20.0	9.9	1.33	11.3	15.8	7.50	31.5
			25	10.2	1.33	11.6	17.2	7.70	10.6	10.6	1.34	12.0	19.2	7.94	19.2	10.9	1.35	12.2	20.4	8.08	29.8
			30	11.1	1.35	12.4	21.6	8.21	9.0	11.5	1.36	12.8	23.8	8.43	17.2	11.7	1.37	13.0	25.1	8.55	26.7
30	0.32	12.2	10	6.7	1.78	8.5	4.9	3.79	15.9	7.0	1.78	8.8	6.2	3.95	25.4	7.2	1.79	9.0	7.0	4.05	36.8
			15	7.7	1.79	9.5	9.1	4.31	13.6	8.1	1.80	9.9	10.6	4.49	23.1	8.3	1.80	10.1	11.5	4.59	34.9
			20	8.7	1.81	10.5	13.4	4.80	11.0	9.0	1.81	10.9	15.1	4.98	20.0	9.2	1.82	11.1	16.1	5.09	31.5
			25	9.6	1.82	11.4	17.7	5.25	10.6	9.9	1.83	11.8	19.6	5.43	19.2	10.1	1.83	12.0	20.7	5.54	29.8
			30	10.4	1.83	12.2	22.1	5.67	9.0	10.8	1.84	12.6	24.2	5.85	17.2	11.0	1.84	12.8	25.4	5.96	26.7
	0.44	21.3	10	6.8	1.69	8.5	4.8	4.03	15.9	7.1	1.70	8.8	6.1	4.20	25.4	7.3	1.70	9.0	6.9	4.31	36.8
			15	7.8	1.71	9.5	9.1	4.58	13.6	8.2	1.71	9.9	10.6	4.77	23.1	8.4	1.72	10.1	11.5	4.88	34.9
			20	8.8	1.72	10.5	13.3	5.10	11.0	9.1	1.73	10.9	15.0	5.29	20.0	9.4	1.73	11.1	16.1	5.41	31.5
			25	9.7	1.73	11.4	17.7	5.58	10.6	10.1	1.74	11.8	19.6	5.78	19.2	10.3	1.74	12.0	20.7	5.89	29.8
			30	10.5	1.75	12.3	22.0	6.03	9.0	10.9	1.75	12.6	24.1	6.22	17.2	11.1	1.75	12.8	25.3	6.33	26.7
	0.57	33.8	10	6.9	1.64	8.5	4.8	4.19	15.9	7.2	1.65	8.9	6.1	4.38	25.4	7.4	1.65	9.0	6.9	4.49	36.8
			15	7.9	1.66	9.6	9.0	4.77	13.6	8.3	1.66	9.9	10.5	4.97	23.1	8.5	1.66	10.1	11.4	5.08	34.9
			20	8.9	1.67	10.5	13.3	5.31	11.0	9.2	1.67	10.9	15.0	5.52	20.0	9.5	1.68	11.1	16.0	5.63	31.5
			25	9.8	1.68	11.5	17.6	5.82	10.6	10.2	1.69	11.8	19.5	6.02	19.2	10.4	1.69	12.1	20.6	6.14	29.8
			30	10.6	1.69	12.3	21.9	6.28	9.0	11.0	1.70	12.7	24.0	6.48	17.2	11.2	1.70	12.9	25.3	6.60	26.7
40	0.32	9.4	10	6.1	2.29	8.4	5.4	2.67	15.9	6.4	2.30	8.7	6.5	2.78	25.4	6.6	2.30	8.9	7.2	2.85	36.8
			15	7.1	2.32	9.4	9.6	3.07	13.6	7.4	2.32	9.7	11.0	3.20	23.1	7.6	2.32	9.9	11.8	3.28	34.9
			20	8.1	2.33	10.4	13.9	3.46	11.0	8.4	2.34	10.8	15.4	3.60	20.0	8.6	2.34	11.0	16.4	3.68	31.5
			25	9.0	2.35	11.3	18.2	3.83	10.6	9.4	2.35	11.7	19.9	3.98	19.2	9.6	2.35	11.9	21.0	4.07	29.8
			30	9.9	2.36	12.2	22.5	4.19	9.0	10.3	2.36	12.6	24.4	4.35	17.2	10.5	2.36	12.9	25.6	4.45	26.7
	0.44	17.6	10	6.2	2.18	8.4	5.3	2.84	15.9	6.5	2.19	8.7	6.5	2.96	25.4	6.6	2.19	8.8	7.2	3.03	36.8
			15	7.2	2.20	9.4	9.5	3.27	13.6	7.5	2.21	9.7	10.9	3.40	23.1	7.7	2.21	9.9	11.8	3.48	34.9
			20	8.2	2.22	10.4	13.8	3.68	11.0	8.5	2.23	10.7	15.4	3.83	20.0	8.7	2.23	11.0	16.3	3.91	31.5
			25	9.1	2.23	11.3	18.1	4.08	10.6	9.5	2.24	11.7	19.9	4.23	19.2	9.7	2.24	11.9	20.9	4.33	29.8
			30	10.0	2.24	12.2	22.4	4.46	9.0	10.4	2.25	12.6	24.4	4.63	17.2	10.6	2.25	12.9	25.5	4.73	26.7
	0.57	28.9	10	6.3	2.12	8.4	5.3	2.96	15.9	6.5	2.12	8.7	6.5	3.08	25.4	6.7	2.13	8.8	7.2	3.16	36.8
			15	7.3	2.14	9.4	9.5	3.40	13.6	7.6	2.14	9.7	10.9	3.55	23.1	7.8	2.15	9.9	11.7	3.63	34.9
			20	8.3	2.15	10.4	13.7	3.83	11.0	8.6	2.16	10.8	15.3	3.99	20.0	8.8	2.16	11.0	16.3	4.08	31.5
			25	9.2	2.17	11.4	18.0	4.25	10.6	9.6	2.17	11.7	19.8	4.41	19.2	9.8	2.17	12.0	20.9	4.51	29.8
			30	10.1	2.17	12.3	22.3	4.65	9.0	10.5	2.18	12.7	24.3	4.82	17.2	10.7	2.18	12.9	25.5	4.93	26.7

Rev: 04/16/02 B

Interpolation is permissible, extrapolation is not.

All performance data is based upon the lower voltage of dual voltage rated units.

All performance data is based upon a load coaxial heat exchanger of single-walled copper construction. For vented double-walled performance consult the factory.

ClimateMaster works continually to improve its products. As a result, the design and specifications of each product at the time of order may be changed without notice and may not be as described herein. Please contact ClimateMaster's Customer Service Department at 1-405-745-6000 for specific information on the current design and specifications. Statements and other information contained herein are not express warranties and do not form the basis of any bargain between the parties, but are merely ClimateMaster's opinion or commendation of its products. The latest version of this document is available at www.climatemaster.com.

GSW Series 50Hz - R407c Submittal Data Eng/SI

CLIMATEMASTER®

PERFORMANCE DATA
GSW036 HEATING

Contractor: *P.O.:*

Engineer:

Project Name: *Unit Tag:*

SOURCE			LOAD																			
ESWT	Flow	WPD	ELWT	Flow 0.32 l/s						Flow 0.44 l/s						Flow 0.57 l/s					
°C	l/s	kPa	°C	HC kW	PI kW	HE kW	LWT °C	COP W/W	WPD kPa	HC kW	PI kW	HE kW	LWT °C	COP W/W	WPD kPa	HC kW	PI kW	HE kW	LWT °C	COP W/W	WPD kPa
-5	0.57	68.2	20	5.8	1.41	4.4	24.4	4.09	13.6	5.8	1.37	4.4	23.1	4.22	23.1	5.8	1.35	4.5	22.4	4.30	34.9
			30	5.7	1.76	3.9	34.3	3.22	10.6	5.7	1.70	4.0	33.1	3.34	19.2	5.7	1.67	4.0	32.4	3.40	29.8
			40	5.6	2.21	3.3	44.2	2.52	7.3	5.6	2.14	3.4	43.0	2.60	15.4	5.6	2.10	3.5	42.3	2.65	24.6
			45	5.5	2.47	3.0	49.2	2.23	6.2	5.5	2.40	3.1	48.0	2.30	13.9	5.5	2.36	3.2	47.3	2.34	22.8
0	0.32	26.1	20	6.1	1.42	4.7	24.6	4.27	13.6	6.1	1.38	4.7	23.3	4.41	23.1	6.1	1.36	4.8	22.6	4.49	34.9
			30	6.0	1.77	4.2	34.5	3.37	10.6	6.0	1.72	4.3	33.2	3.48	19.2	6.0	1.69	4.3	32.5	3.55	29.8
			40	5.9	2.23	3.6	44.4	2.63	7.3	5.9	2.16	3.7	43.2	2.72	15.4	5.9	2.12	3.8	42.5	2.77	24.6
			45	5.8	2.49	3.3	49.4	2.32	6.2	5.8	2.42	3.4	48.1	2.40	13.9	5.8	2.38	3.4	47.5	2.45	22.8
	0.44	40.3	20	6.5	1.44	5.1	25.0	4.55	13.6	6.6	1.39	5.2	23.5	4.70	23.1	6.6	1.37	5.2	22.8	4.78	34.9
			30	6.4	1.78	4.6	34.9	3.59	10.6	6.4	1.73	4.7	33.5	3.71	19.2	6.4	1.70	4.7	32.7	3.78	29.8
			40	6.3	2.24	4.0	44.8	2.80	7.3	6.3	2.17	4.1	43.4	2.90	15.4	6.3	2.14	4.2	42.7	2.95	24.6
			45	6.2	2.51	3.7	49.7	2.48	6.2	6.2	2.44	3.8	48.4	2.56	13.9	6.2	2.39	3.8	47.6	2.61	22.8
	0.57	58.3	20	6.6	1.44	5.2	25.0	4.61	13.6	6.7	1.40	5.3	23.6	4.76	23.1	6.7	1.38	5.3	22.8	4.84	34.9
			30	6.5	1.79	4.7	34.9	3.63	10.6	6.5	1.74	4.8	33.5	3.76	19.2	6.5	1.71	4.8	32.8	3.83	29.8
			40	6.4	2.25	4.1	44.8	2.84	7.3	6.4	2.18	4.2	43.5	2.93	15.4	6.4	2.14	4.3	42.7	2.99	24.6
			45	6.3	2.52	3.8	49.8	2.51	6.2	6.3	2.44	3.9	48.4	2.59	13.9	6.3	2.40	3.9	47.7	2.64	22.8
5	0.32	22.1	20	6.9	1.35	5.5	25.2	5.06	13.6	6.9	1.31	5.6	23.7	5.27	23.1	6.9	1.28	5.6	22.9	5.39	34.9
			30	6.7	1.54	5.2	35.1	4.37	10.6	6.7	1.48	5.3	33.6	4.56	19.2	6.8	1.44	5.3	32.8	4.68	29.8
			40	6.5	1.93	4.6	45.0	3.40	7.3	6.6	1.85	4.7	43.6	3.55	15.4	6.6	1.81	4.8	42.8	3.64	24.6
			45	6.5	2.15	4.3	49.9	3.00	6.2	6.5	2.07	4.4	48.5	3.13	13.9	6.5	2.03	4.5	47.7	3.21	22.8
	0.44	34.3	20	7.4	1.36	6.0	25.6	5.39	13.6	7.4	1.32	6.1	24.0	5.62	23.1	7.4	1.29	6.1	23.1	5.74	34.9
			30	7.2	1.55	5.7	35.5	4.65	10.6	7.2	1.49	5.7	33.9	4.86	19.2	7.2	1.45	5.8	33.1	4.98	29.8
			40	7.0	1.94	5.1	45.3	3.62	7.3	7.1	1.87	5.2	43.8	3.78	15.4	7.1	1.83	5.2	43.0	3.87	24.6
			45	6.9	2.17	4.8	50.3	3.20	6.2	7.0	2.09	4.9	48.8	3.33	13.9	7.0	2.05	4.9	47.9	3.41	22.8
	0.57	49.8	20	7.5	1.37	6.1	25.7	5.46	13.6	7.5	1.32	6.2	24.1	5.69	23.1	7.5	1.29	6.2	23.2	5.82	34.9
			30	7.3	1.55	5.8	35.5	4.71	10.6	7.3	1.49	5.9	34.0	4.92	19.2	7.4	1.46	5.9	33.1	5.04	29.8
			40	7.1	1.95	5.2	45.4	3.67	7.3	7.2	1.87	5.3	43.9	3.83	15.4	7.2	1.83	5.4	43.0	3.92	24.6
			45	7.1	2.18	4.9	50.3	3.24	6.2	7.1	2.10	5.0	48.8	3.38	13.9	7.1	2.05	5.0	48.0	3.46	22.8
10	0.32	18.2	20	7.7	1.48	6.2	25.8	5.20	13.6	7.7	1.42	6.3	24.2	5.42	23.1	7.7	1.39	6.3	23.3	5.54	34.9
			30	7.5	1.84	5.7	35.7	4.09	10.6	7.5	1.77	5.8	34.1	4.27	19.2	7.6	1.73	5.8	33.2	4.37	29.8
			40	7.3	2.30	5.0	45.6	3.18	7.3	7.4	2.22	5.1	44.0	3.32	15.4	7.4	2.17	5.2	43.1	3.40	24.6
			45	7.2	2.58	4.7	50.5	2.81	6.2	7.3	2.48	4.8	48.9	2.93	13.9	7.3	2.43	4.9	48.1	3.00	22.8
	0.44	28.2	20	8.2	1.49	6.8	26.2	5.54	13.6	8.3	1.43	6.8	24.5	5.77	23.1	8.3	1.40	6.9	23.5	5.90	34.9
			30	8.1	1.85	6.2	36.1	4.35	10.6	8.1	1.78	6.3	34.4	4.55	19.2	8.1	1.74	6.4	33.4	4.66	29.8
			40	7.9	2.32	5.5	46.0	3.39	7.3	7.9	2.23	5.7	44.3	3.54	15.4	7.9	2.19	5.7	43.3	3.62	24.6
			45	7.8	2.60	5.2	50.9	2.99	6.2	7.8	2.50	5.3	49.2	3.12	13.9	7.8	2.45	5.4	48.3	3.19	22.8
	0.57	41.3	20	8.4	1.49	6.9	26.4	5.61	13.6	8.4	1.44	7.0	24.6	5.85	23.1	8.4	1.41	7.0	23.5	5.98	34.9
			30	8.2	1.86	6.3	36.2	4.41	10.6	8.2	1.79	6.4	34.5	4.61	19.2	8.2	1.75	6.5	33.5	4.72	29.8
			40	8.0	2.33	5.7	46.1	3.43	7.3	8.0	2.24	5.8	44.3	3.58	15.4	8.1	2.19	5.9	43.4	3.67	24.6
			45	7.9	2.61	5.3	51.0	3.03	6.2	7.9	2.51	5.4	49.3	3.16	13.9	7.9	2.46	5.5	48.3	3.23	22.8
15	0.32	19.7	20	8.4	1.40	7.0	26.4	6.05	13.6	8.5	1.35	7.1	24.6	6.30	23.1	8.5	1.32	7.2	23.6	6.44	34.9
			30	8.3	1.54	6.7	36.3	5.38	10.6	8.3	1.48	6.8	34.5	5.62	19.2	8.3	1.44	6.9	33.5	5.75	29.8
			40	8.1	1.93	6.1	46.1	4.19	7.3	8.1	1.85	6.2	44.4	4.37	15.4	8.1	1.81	6.3	43.4	4.48	24.6
			45	8.0	2.15	5.8	51.0	3.69	6.2	8.0	2.07	5.9	49.3	3.85	13.9	8.0	2.03	6.0	48.4	3.94	22.8
	0.44	26.5	20	9.1	1.41	7.6	26.9	6.44	13.6	9.1	1.35	7.7	24.9	6.71	23.1	9.1	1.33	7.8	23.8	6.86	34.9
			30	8.9	1.55	7.3	36.7	5.73	10.6	8.9	1.49	7.4	34.8	5.98	19.2	8.9	1.45	7.5	33.8	6.13	29.8
			40	8.6	1.94	6.7	46.6	4.46	7.3	8.7	1.87	6.8	44.7	4.65	15.4	8.7	1.83	6.9	43.7	4.77	24.6
			45	8.5	2.17	6.4	51.5	3.93	6.2	8.6	2.09	6.5	49.6	4.10	13.9	8.6	2.05	6.5	48.6	4.20	22.8
	0.57	34.1	20	9.2	1.41	7.8	27.0	6.52	13.6	9.2	1.36	7.9	25.0	6.79	23.1	9.3	1.33	7.9	23.9	6.95	34.9
			30	9.0	1.55	7.5	36.8	5.80	10.6	9.0	1.49	7.5	34.9	6.06	19.2	9.1	1.46	7.6	33.8	6.21	29.8
			40	8.8	1.95	6.8	46.7	4.51	7.3	8.8	1.87	7.0	44.8	4.71	15.4	8.8	1.83	7.0	43.7	4.83	24.6
			45	8.7	2.18	6.5	51.6	3.98	6.2	8.7	2.10	6.6	49.7	4.16	13.9	8.7	2.05	6.7	48.7	4.26	22.8
20	0.32	16.0	20	9.7	1.54	8.2	27.3	6.30	13.6	9.7	1.47	8.3	25.3	6.62	23.1	9.7	1.43	8.3	24.1	6.79	34.9
			30	9.5	1.91	7.6	37.2	5.00	10.6	9.6	1.82	7.8	35.2	5.27	19.2	9.6	1.77	7.8	34.0	5.43	29.8
			40	9.3	2.39	7.0	47.1	3.91	7.3	9.4	2.28	7.1	45.1	4.13	15.4	9.4	2.21	7.2	44.0	4.25	24.6
			45	OPERATION NOT RECOMMENDED						OPERATION NOT RECOMMENDED						OPERATION NOT RECOMMENDED					
	0.44	25.1	20	10.4	1.55	8.8	27.9	6.71	13.6	10.4	1.48	8.9	25.6	7.05	23.1	10.4	1.44	9.0	24.4	7.23	34.9
			30	10.2	1.92	8.3	37.8	5.32	10.6	10.3	1.83	8.4	35.6	5.62	19.2	10.3	1.78	8.5	34.3	5.78	29.8
			40	10.0	2.41	7.6	47.6	4.16	7.3	10.1	2.29	7.8	45.5	4.39	15.4	10.1	2.23	7.9	44.3	4.53	24.6
			45	OPERATION NOT RECOMMENDED						OPERATION NOT RECOMMENDED						OPERATION NOT RECOMMENDED					
	0.57	37.5	20	10.6	1.55	9.0	28.0	6.80	13.6	10.6	1.49	9.1	25.7	7.14	23.1	10.6	1.45	9.2	24.5	7.32	34.9
			30	10.4	1.93	8.5	37.9	5.39	10.6	10.4	1.84	8.6	35.7	5.69	19.2	10.5	1.79	8.7	34.4	5.86	29.8
			40	10.2	2.42	7.8	47.7	4.22	7.3	10.2	2.30	7.9	45.5	4.45	15.4	10.3	2.24	8.0	44.3	4.59	24.6
			45	OPERATION NOT RECOMMENDED						OPERATION NOT RECOMMENDED						OPERATION NOT RECOMMENDED					

Rev: 03/01/02 B

Interpolation is permissible, extrapolation is not.
All performance data is based upon the lower voltage of dual voltage rated units.
All performance data is based upon a load coaxial heat exchanger of single-walled copper construction. For vented double-walled performance consult the factory.
Operation below 5°C is based upon 15% antifreeze solution

ClimateMaster works continually to improve its products. As a result, the design and specifications of each product at the time of order may be changed without notice and may not be as described herein. Please contact ClimateMaster's Customer Service Department at 1-405-745-6000 for specific information on the current design and specifications. Statements and other information contained herein are not express warranties and do not form the basis of any bargain between the parties, but are merely ClimateMaster's opinion or commendation of its products. The latest version of this document is available at www.climatemaster.com.

GSW Series 50Hz - R407c Submittal Data Eng/SI

CLIMATEMASTER®

Contractor: P.O.:

Engineer:

Project Name: Unit Tag:

PERFORMANCE DATA
GSW060 COOLING

SOURCE			LOAD																			
ESWT	Flow	WPD	ELWT	Flow 0.47 l/s						Flow 0.71 l/s						Flow 0.95 l/s					
°C	l/s	kPa	°C	TC kW	PI kW	HR kW	LWT °C	EER W/W	WPD kPa	TC kW	PI kW	HR kW	LWT °C	EER W/W	WPD kPa	TC kW	PI kW	HR kW	LWT °C	EER W/W	WPD kPa
10	0.47	15.5	10	11.1	2.09	13.2	4.4	5.33	12.6	11.5	2.10	13.6	6.1	5.51	23.7	11.8	2.08	13.8	7.0	5.65	38.5
			15	12.2	2.11	14.3	8.9	5.75	11.0	12.6	2.13	14.7	10.8	5.91	21.1	12.8	2.11	14.9	11.8	6.06	34.5
			20	13.1	2.14	15.2	13.4	6.10	9.7	13.5	2.16	15.6	15.5	6.24	19.3	13.6	2.13	15.8	16.6	6.40	31.7
			25	13.9	2.18	16.0	18.0	6.38	8.9	14.2	2.19	16.4	20.2	6.49	17.6	14.4	2.16	16.5	21.4	6.65	29.0
			30	14.6	2.21	16.8	22.6	6.58	7.7	14.9	2.23	17.1	25.0	6.66	15.4	15.0	2.19	17.2	26.2	6.83	26.2
	0.71	27.3	10	11.3	2.03	13.3	4.3	5.55	12.6	11.7	2.04	13.8	6.1	5.73	23.7	11.9	2.03	14.0	7.0	5.88	38.5
			15	12.3	2.06	14.4	8.8	5.98	11.0	12.8	2.07	14.8	10.7	6.15	21.1	13.0	2.05	15.0	11.7	6.31	34.5
			20	13.3	2.09	15.4	13.3	6.35	9.7	13.7	2.11	15.8	15.4	6.49	19.3	13.9	2.08	15.9	16.5	6.66	31.7
			25	14.1	2.12	16.2	17.9	6.63	8.9	14.4	2.14	16.6	20.2	6.75	17.6	14.6	2.11	16.7	21.3	6.92	29.0
			30	14.8	2.16	16.9	22.5	6.85	7.7	15.1	2.18	17.3	24.9	6.93	15.4	15.2	2.14	17.4	26.2	7.11	26.2
	0.95	42.0	10	11.5	1.99	13.4	4.2	5.77	12.6	11.9	2.00	13.9	6.0	5.95	23.7	12.1	1.98	14.1	6.9	6.11	38.5
			15	12.5	2.01	14.5	8.7	6.22	11.0	12.9	2.03	15.0	10.7	6.39	21.1	13.2	2.01	15.2	11.7	6.55	34.5
			20	13.5	2.04	15.5	13.2	6.59	9.7	13.9	2.06	15.9	15.3	6.74	19.3	14.1	2.03	16.1	16.4	6.91	31.7
			25	14.3	2.07	16.4	17.8	6.89	8.9	14.7	2.09	16.7	20.1	7.01	17.6	14.8	2.06	16.9	21.3	7.19	29.0
			30	15.0	2.11	17.1	22.4	7.12	7.7	15.3	2.13	17.4	24.9	7.20	15.4	15.4	2.09	17.5	26.1	7.38	26.2
20	0.47	13.4	10	11.1	2.50	13.6	4.4	4.44	12.6	11.5	2.50	14.0	6.1	4.60	23.7	11.7	2.51	14.2	7.0	4.66	38.5
			15	12.1	2.52	14.6	8.9	4.81	11.0	12.5	2.53	15.0	10.8	4.94	21.1	12.7	2.54	15.3	11.8	5.00	34.5
			20	13.0	2.55	15.6	13.4	5.10	9.7	13.4	2.57	16.0	15.5	5.20	19.3	13.6	2.58	16.1	16.6	5.26	31.7
			25	13.8	2.60	16.4	18.0	5.30	8.9	14.1	2.63	16.7	20.3	5.37	17.6	14.3	2.63	16.9	21.4	5.44	29.0
			30	14.4	2.66	17.1	22.7	5.43	7.7	14.7	2.70	17.4	25.1	5.46	15.4	14.8	2.69	17.5	26.2	5.53	26.2
	0.71	24.5	10	11.3	2.43	13.7	4.3	4.62	12.6	11.7	2.44	14.1	6.1	4.78	23.7	11.9	2.45	14.3	7.0	4.85	38.5
			15	12.3	2.46	14.8	8.8	5.00	11.0	12.7	2.47	15.2	10.7	5.14	21.1	12.9	2.48	15.4	11.7	5.21	34.5
			20	13.2	2.49	15.7	13.3	5.30	9.7	13.6	2.51	16.1	15.4	5.41	19.3	13.8	2.52	16.3	16.5	5.47	31.7
			25	14.0	2.54	16.5	17.9	5.52	8.9	14.3	2.56	16.9	20.2	5.59	17.6	14.5	2.56	17.1	21.3	5.66	29.0
			30	14.7	2.59	17.2	22.6	5.65	7.7	14.9	2.63	17.6	25.0	5.68	15.4	15.1	2.62	17.7	26.2	5.75	26.2
	0.95	37.9	10	11.4	2.38	13.8	4.2	4.80	12.6	11.9	2.39	14.2	6.0	4.97	23.7	12.1	2.40	14.5	6.9	5.04	38.5
			15	12.5	2.40	14.9	8.7	5.20	11.0	12.9	2.41	15.3	10.7	5.34	21.1	13.1	2.42	15.5	11.7	5.41	34.5
			20	13.4	2.43	15.8	13.2	5.51	9.7	13.8	2.45	16.2	15.4	5.62	19.3	14.0	2.46	16.4	16.5	5.69	31.7
			25	14.2	2.48	16.7	17.8	5.73	8.9	14.5	2.50	17.1	20.1	5.81	17.6	14.7	2.50	17.2	21.3	5.88	29.0
			30	14.9	2.54	17.4	22.5	5.87	7.7	15.2	2.57	17.7	24.9	5.90	15.4	15.3	2.56	17.9	26.1	5.97	26.2
30	0.47	10.6	10	10.9	3.05	14.0	4.5	3.59	12.6	11.4	3.06	14.4	6.2	3.72	23.7	11.6	3.09	14.7	7.1	3.74	38.5
			15	12.0	3.07	15.0	8.9	3.90	11.0	12.4	3.09	15.5	10.8	4.01	21.1	12.6	3.12	15.7	11.8	4.03	34.5
			20	12.9	3.11	16.0	13.5	4.13	9.7	13.2	3.14	16.4	15.6	4.22	19.3	13.4	3.17	16.6	16.6	4.24	31.7
			25	13.7	3.18	16.8	18.1	4.30	8.9	14.0	3.22	17.2	20.3	4.35	17.6	14.1	3.24	17.4	21.4	4.37	29.0
			30	14.3	3.26	17.6	22.8	4.38	7.7	14.6	3.31	17.9	25.1	4.39	15.4	14.7	3.32	18.0	26.3	4.42	26.2
	0.71	21.1	10	11.1	2.98	14.1	4.4	3.73	12.6	11.5	2.98	14.5	6.1	3.87	23.7	11.7	3.01	14.8	7.0	3.90	38.5
			15	12.2	3.00	15.2	8.9	4.05	11.0	12.6	3.01	15.6	10.8	4.17	21.1	12.8	3.04	15.8	11.8	4.19	34.5
			20	13.1	3.04	16.1	13.4	4.30	9.7	13.4	3.06	16.5	15.5	4.39	19.3	13.6	3.09	16.7	16.6	4.41	31.7
			25	13.9	3.10	17.0	18.0	4.47	8.9	14.2	3.14	17.3	20.2	4.52	17.6	14.3	3.16	17.5	21.4	4.54	29.0
			30	14.5	3.18	17.7	22.7	4.56	7.7	14.8	3.23	18.0	25.0	4.57	15.4	14.9	3.24	18.2	26.2	4.60	26.2
	0.95	34.5	10	11.3	2.91	14.2	4.3	3.88	12.6	11.7	2.91	14.6	6.1	4.02	23.7	11.9	2.95	14.9	7.0	4.05	38.5
			15	12.3	2.93	15.3	8.8	4.21	11.0	12.7	2.94	15.7	10.7	4.33	21.1	13.0	2.97	15.9	11.7	4.36	34.5
			20	13.3	2.97	16.2	13.3	4.47	9.7	13.7	2.99	16.6	15.4	4.56	19.3	13.8	3.02	16.9	16.5	4.58	31.7
			25	14.1	3.03	17.1	17.9	4.64	8.9	14.4	3.07	17.5	20.2	4.70	17.6	14.6	3.08	17.6	21.3	4.72	29.0
			30	14.7	3.11	17.8	22.6	4.74	7.7	15.0	3.16	18.2	25.0	4.75	15.4	15.1	3.17	18.3	26.2	4.78	26.2
40	0.47	8.9	10	10.3	3.76	14.0	4.8	2.73	12.6	10.7	3.78	14.5	6.4	2.83	23.7	10.9	3.75	14.7	7.2	2.91	38.5
			15	11.4	3.82	15.2	9.2	2.99	11.0	11.8	3.85	15.7	11.0	3.08	21.1	12.0	3.81	15.9	12.0	3.16	34.5
			20	12.4	3.89	16.3	13.7	3.19	9.7	12.8	3.92	16.7	15.7	3.27	19.3	13.0	3.88	16.9	16.7	3.36	31.7
			25	13.3	3.97	17.3	18.3	3.35	8.9	13.6	4.01	17.7	20.4	3.40	17.6	13.8	3.95	17.8	21.5	3.50	29.0
			30	14.0	4.06	18.1	22.9	3.46	7.7	14.3	4.10	18.4	25.2	3.49	15.4	14.5	4.03	18.5	26.3	3.59	26.2
	0.71	19.2	10	10.4	3.67	14.1	4.7	2.85	12.6	10.9	3.69	14.6	6.4	2.95	23.7	11.1	3.66	14.8	7.2	3.03	38.5
			15	11.6	3.73	15.3	9.1	3.11	11.0	12.0	3.76	15.8	11.0	3.20	21.1	12.2	3.72	15.9	11.9	3.29	34.5
			20	12.6	3.80	16.4	13.6	3.32	9.7	13.0	3.83	16.8	15.6	3.40	19.3	13.2	3.78	17.0	16.7	3.49	31.7
			25	13.5	3.87	17.4	18.2	3.48	8.9	13.9	3.91	17.8	20.4	3.54	17.6	14.0	3.85	17.9	21.5	3.64	29.0
			30	14.2	3.96	18.2	22.8	3.60	7.7	14.5	4.00	18.5	25.1	3.63	15.4	14.7	3.93	18.6	26.3	3.74	26.2
	0.95	31.4	10	10.6	3.58	14.2	4.6	2.96	12.6	11.0	3.60	14.6	6.3	3.06	23.7	11.3	3.58	14.8	7.2	3.15	38.5
			15	11.8	3.64	15.4	9.1	3.23	11.0	12.2	3.67	15.9	10.9	3.32	21.1	12.4	3.63	16.0	11.9	3.42	34.5
			20	12.8	3.71	16.5	13.5	3.45	9.7	13.2	3.74	16.9	15.6	3.53	19.3	13.4	3.69	17.1	16.6	3.63	31.7
			25	13.7	3.78	17.5	18.1	3.62	8.9	14.1	3.82	17.9	20.3	3.68	17.6	14.2	3.76	18.0	21.4	3.78	29.0
			30	14.4	3.87	18.3	22.7	3.74	7.7	14.8	3.91	18.7	25.0	3.77	15.4	14.9	3.84	18.7	26.2	3.88	26.2

Rev: 04/16/02 B

Interpolation is permissible, extrapolation is not.

All performance data is based upon the lower voltage of dual voltage rated units.

All performance data is based upon a load coaxial heat exchanger of single-walled copper construction. For vented double-walled performance consult the factory.

ClimateMaster works continually to improve its products. As a result, the design and specifications of each product at the time of order may be changed without notice and may not be as described herein. Please contact ClimateMaster's Customer Service Department at 1-405-745-6000 for specific information on the current design and specifications. Statements and other information contained herein are not express warranties and do not form the basis of any bargain between the parties, but are merely ClimateMaster's opinion or commendation of its products. The latest version of this document is available at www.climatemaster.com.

GSW Series 50Hz - R407c Submittal Data Eng/SI

CLIMATEMASTER®

Contractor:	*P.O.:*
Engineer:	
Project Name:	*Unit Tag:*

PERFORMANCE DATA
GSW060 HEATING

SOURCE			LOAD																			
ESWT	Flow	WPD	ELWT	Flow 0.47 l/s						FLOW RATE 0.71 l/s						FLOW RATE 0.95 l/s					
°C	l/s	kPa	°C	HC kW	PI kW	HE kW	LWT °C	COP W/W	WPD kPa	HC kW	PI kW	HE kW	LWT °C	COP W/W	WPD kPa	HC kW	PI kW	HE kW	LWT °C	COP W/W	WPD kPa
-5	0.95	54.5	20	10.2	2.42	7.8	25.2	4.22	11.0	10.3	2.35	8.0	23.5	4.39	21.1	10.4	2.31	8.0	22.6	4.48	34.5
			30	9.6	2.87	6.8	34.9	3.36	8.9	9.7	2.78	7.0	33.3	3.50	17.6	9.8	2.73	7.1	32.5	3.58	29.0
			40	9.0	3.42	5.5	44.5	2.62	6.2	9.1	3.32	5.8	43.0	2.74	13.4	9.1	3.27	5.9	42.3	2.80	24.1
			45	8.6	3.73	4.9	49.3	2.31	4.5	8.7	3.62	5.1	47.9	2.40	10.8	8.8	3.57	5.2	47.2	2.46	19.9
0	0.47	21.4	20	10.6	2.44	8.2	25.4	4.35	11.0	10.7	2.36	8.3	23.6	4.53	21.1	10.8	2.33	8.4	22.7	4.62	34.5
			30	10.0	2.89	7.1	35.1	3.46	8.9	10.1	2.80	7.3	33.4	3.61	17.6	10.2	2.75	7.4	32.6	3.69	29.0
			40	9.3	3.44	5.9	44.7	2.70	6.2	9.4	3.34	6.1	43.2	2.82	13.4	9.5	3.29	6.2	42.4	2.88	24.1
			45	8.9	3.76	5.2	49.5	2.38	4.5	9.1	3.65	5.4	48.0	2.48	10.8	9.1	3.60	5.5	47.3	2.53	19.9
	0.71	34.4	20	11.2	2.46	8.8	25.7	4.57	11.0	11.3	2.38	9.0	23.8	4.76	21.1	11.4	2.35	9.0	22.9	4.85	34.5
			30	10.6	2.91	7.7	35.3	3.63	8.9	10.7	2.82	7.9	33.6	3.79	17.6	10.8	2.78	8.0	32.7	3.87	29.0
			40	9.9	3.47	6.4	45.0	2.84	6.2	10.0	3.37	6.6	43.3	2.96	13.4	10.0	3.32	6.7	42.5	3.03	24.1
			45	9.5	3.79	5.7	49.8	2.50	4.5	9.6	3.68	5.9	48.2	2.60	10.8	9.7	3.63	6.0	47.4	2.66	19.9
	0.95	50.7	20	11.7	2.47	9.3	25.9	4.75	11.0	11.8	2.39	9.5	24.0	4.95	21.1	11.9	2.36	9.5	23.0	5.05	34.5
			30	11.1	2.92	8.1	35.6	3.78	8.9	11.2	2.83	8.4	33.8	3.95	17.6	11.2	2.79	8.5	32.8	4.03	29.0
			40	10.3	3.49	6.8	45.2	2.95	6.2	10.4	3.38	7.0	43.5	3.08	13.4	10.5	3.33	7.2	42.7	3.15	24.1
			45	9.9	3.81	6.1	50.0	2.60	4.5	10.0	3.70	6.3	48.4	2.71	10.8	10.1	3.65	6.4	47.5	2.77	19.9
5	0.47	18.4	20	11.8	2.51	9.3	26.0	4.72	11.0	11.9	2.42	9.5	24.0	4.93	21.1	12.0	2.38	9.6	23.0	5.03	34.5
			30	11.3	2.97	8.3	35.7	3.79	8.9	11.4	2.87	8.5	33.8	3.97	17.6	11.5	2.82	8.6	32.9	4.06	29.0
			40	10.5	3.55	7.0	45.3	2.97	6.2	10.7	3.43	7.2	43.6	3.11	13.4	10.8	3.37	7.4	42.7	3.19	24.1
			45	10.1	3.87	6.2	50.1	2.61	4.5	10.3	3.75	6.5	48.4	2.73	10.8	10.3	3.69	6.6	47.6	2.80	19.9
	0.71	30.5	20	12.5	2.53	10.0	26.3	4.95	11.0	12.6	2.44	10.2	24.2	5.17	21.1	12.7	2.40	10.3	23.2	5.28	34.5
			30	11.9	3.00	8.9	36.0	3.98	8.9	12.1	2.89	9.2	34.0	4.17	17.6	12.1	2.84	9.3	33.1	4.27	29.0
			40	11.1	3.58	7.6	45.6	3.11	6.2	11.3	3.46	7.8	43.8	3.27	13.4	11.4	3.40	8.0	42.9	3.35	24.1
			45	10.7	3.91	6.8	50.4	2.73	4.5	10.9	3.78	7.1	48.6	2.87	10.8	10.9	3.72	7.2	47.8	2.94	19.9
	0.95	45.5	20	13.1	2.54	10.5	26.6	5.16	11.0	13.2	2.45	10.7	24.4	5.38	21.1	13.2	2.41	10.8	23.3	5.50	34.5
			30	12.5	3.01	9.4	36.3	4.14	8.9	12.6	2.91	9.7	34.2	4.34	17.6	12.7	2.85	9.8	33.2	4.44	29.0
			40	11.6	3.59	8.0	45.9	3.24	6.2	11.8	3.47	8.3	44.0	3.40	13.4	11.9	3.41	8.5	43.0	3.48	24.1
			45	11.2	3.92	7.2	50.6	2.85	4.5	11.3	3.80	7.5	48.8	2.99	10.8	11.4	3.74	7.7	47.9	3.06	19.9
10	0.47	15.5	20	13.0	2.57	10.4	26.6	5.06	11.0	13.1	2.47	10.6	24.4	5.29	21.1	13.1	2.42	10.7	23.3	5.41	34.5
			30	12.5	3.05	9.4	36.3	4.09	8.9	12.6	2.93	9.7	34.2	4.31	17.6	12.7	2.87	9.8	33.2	4.41	29.0
			40	11.7	3.65	8.1	45.9	3.22	6.2	11.9	3.51	8.4	44.0	3.39	13.4	12.0	3.45	8.6	43.0	3.49	24.1
			45	11.3	3.99	7.3	50.7	2.83	4.5	11.5	3.85	7.6	48.9	2.99	10.8	11.6	3.78	7.8	47.9	3.07	19.9
	0.71	27.3	20	13.7	2.59	11.2	26.9	5.31	11.0	13.8	2.49	11.3	24.6	5.56	21.1	13.9	2.44	11.4	23.5	5.68	34.5
			30	13.2	3.08	10.1	36.7	4.30	8.9	13.4	2.96	10.4	34.5	4.52	17.6	13.4	2.90	10.5	33.4	4.63	29.0
			40	12.4	3.68	8.8	46.3	3.38	6.2	12.6	3.54	9.1	44.2	3.56	13.4	12.7	3.48	9.2	43.2	3.66	24.1
			45	12.0	4.03	7.9	51.0	2.97	4.5	12.2	3.88	8.3	49.1	3.13	10.8	12.3	3.81	8.5	48.1	3.22	19.9
	0.95	42.0	20	14.4	2.60	11.8	27.3	5.53	11.0	14.5	2.50	12.0	24.8	5.78	21.1	14.5	2.45	12.0	23.7	5.91	34.5
			30	13.8	3.09	10.7	37.0	4.47	8.9	14.0	2.97	11.0	34.7	4.70	17.6	14.0	2.91	11.1	33.5	4.82	29.0
			40	13.0	3.70	9.3	46.6	3.51	6.2	13.2	3.56	9.6	44.4	3.71	13.4	13.3	3.49	9.8	43.4	3.81	24.1
			45	12.5	4.04	8.4	51.3	3.09	4.5	12.7	3.90	8.8	49.3	3.26	10.8	12.8	3.83	9.0	48.2	3.35	19.9
15	0.47	14.3	20	14.0	2.62	11.4	27.1	5.36	11.0	14.1	2.51	11.6	24.7	5.61	21.1	14.1	2.46	11.6	23.6	5.74	34.5
			30	13.6	3.12	10.5	36.9	4.35	8.9	13.7	2.99	10.7	34.6	4.60	17.6	13.8	2.92	10.9	33.5	4.72	29.0
			40	12.9	3.75	9.1	46.5	3.44	6.2	13.1	3.59	9.5	44.4	3.64	13.4	13.2	3.51	9.6	43.3	3.75	24.1
			45	12.4	4.10	8.3	51.3	3.03	4.5	12.6	3.94	8.7	49.2	3.21	10.8	12.7	3.86	8.9	48.2	3.30	19.9
	0.71	26.0	20	14.9	2.64	12.2	27.5	5.62	11.0	14.9	2.53	12.4	25.0	5.89	21.1	14.9	2.48	12.5	23.8	6.02	34.5
			30	14.4	3.15	11.2	37.3	4.57	8.9	14.5	3.01	11.5	34.9	4.83	17.6	14.6	2.95	11.7	33.7	4.95	29.0
			40	13.6	3.78	9.9	46.9	3.61	6.2	13.8	3.62	10.2	44.6	3.82	13.4	13.9	3.54	10.4	43.5	3.93	24.1
			45	13.2	4.14	9.0	51.7	3.18	4.5	13.4	3.97	9.4	49.5	3.37	10.8	13.5	3.89	9.6	48.4	3.47	19.9
	0.95	39.6	20	15.5	2.65	12.9	27.8	5.85	11.0	15.6	2.54	13.0	25.2	6.13	21.1	15.6	2.49	13.1	23.9	6.27	34.5
			30	15.0	3.16	11.9	37.6	4.76	8.9	15.2	3.02	12.2	35.1	5.02	17.6	15.3	2.96	12.3	33.9	5.15	29.0
			40	14.3	3.79	10.5	47.2	3.76	6.2	14.5	3.64	10.8	44.9	3.98	13.4	14.6	3.56	11.0	43.7	4.09	24.1
			45	13.7	4.15	9.6	51.9	3.31	4.5	14.0	3.99	10.0	49.7	3.51	10.8	14.1	3.91	10.2	48.6	3.61	19.9
20	0.47	13.4	20	14.9	2.66	12.2	27.5	5.59	11.0	15.0	2.55	12.4	25.0	5.87	21.1	15.0	2.49	12.5	23.8	6.01	34.5
			30	14.5	3.18	11.3	37.3	4.56	8.9	14.6	3.03	11.6	34.9	4.82	17.6	14.7	2.96	11.7	33.7	4.96	29.0
			40	13.8	3.82	10.0	47.0	3.62	6.2	14.0	3.65	10.4	44.7	3.84	13.4	14.1	3.57	10.5	43.6	3.96	24.1
			45	OPERATION NOT RECOMMENDED						13.6	4.01	9.6	49.6	3.40	10.8	13.7	3.92	9.8	48.5	3.50	19.9
	0.71	24.5	20	15.8	2.69	13.1	28.0	5.87	11.0	15.8	2.57	13.3	25.3	6.17	21.1	15.9	2.51	13.3	24.0	6.31	34.5
			30	15.4	3.21	12.1	37.8	4.79	8.9	15.5	3.06	12.4	35.2	5.07	17.6	15.6	2.99	12.6	33.9	5.21	29.0
			40	14.6	3.86	10.8	47.4	3.80	6.2	14.8	3.68	11.2	45.0	4.03	13.4	14.9	3.60	11.3	43.8	4.15	24.1
			45	OPERATION NOT RECOMMENDED						14.4	4.04	10.4	49.8	3.57	10.8	14.5	3.95	10.6	48.7	3.68	19.9
	0.95	37.9	20	16.5	2.70	13.8	28.3	6.11	11.0	16.5	2.58	14.0	25.6	6.42	21.1	16.6	2.53	14.0	24.2	6.56	34.5
			30	16.0	3.22	12.8	38.1	4.98	8.9	16.2	3.07	13.1	35.4	5.27	17.6	16.3	3.00	13.3	34.1	5.42	29.0
			40	15.3	3.87	11.4	47.7	3.95	6.2	15.5	3.70	11.8	45.2	4.20	13.4	15.6	3.61	12.0	43.9	4.32	24.1
			45	OPERATION NOT RECOMMENDED						15.1	4.06	11.0	50.1	3.71	10.8	15.2	3.97	11.2	48.8	3.82	19.9

Rev: 03/01/02 B

Interpolation is permissible, extrapolation is not.
All performance data is based upon the lower voltage of dual voltage rated units.
All performance data is based upon a load coaxial heat exchanger of single-walled copper construction. For vented double-walled performance consult the factory.
Operation below 5°C is based upon 15% antifreeze solution

ClimateMaster works continually to improve its products. As a result, the design and specifications of each product at the time of order may be changed without notice and may not be as described herein. Please contact ClimateMaster's Customer Service Department at 1-405-745-6000 for specific information on the current design and specifications. Statements and other information contained herein are not express warranties and do not form the basis of any bargain between the parties, but are merely ClimateMaster's opinion or commendation of its products. The latest version of this document is available at www.climatemaster.com.

GSW Series 50Hz - R407c Submittal Data Eng/SI

CLIMATEMASTER®

PERFORMANCE DATA
GSW120 COOLING

Contractor: *P.O.:*

Engineer:

Project Name: *Unit Tag:*

SOURCE			LOAD																			
ESWT	Flow	WPD	ELWT	Flow 0.95 l/s						Flow 1.43 l/s						Flow 1.89 l/s					
°C	l/s	kPa	°C	TC kW	PI kW	HR kW	LWT °C	EER W/W	WPD kPa	TC kW	PI kW	HR kW	LWT °C	EER W/W	WPD kPa	TC kW	PI kW	HR kW	LWT °C	EER W/W	WPD kPa
10	0.95	15.5	10	22.2	4.17	26.4	4.4	5.33	17.6	23.1	4.19	27.3	6.1	5.51	33.2	23.5	4.16	27.7	7.0	5.65	53.9
			15	24.3	4.23	28.5	8.9	5.75	15.4	25.1	4.25	29.4	10.8	5.91	29.6	25.5	4.21	29.7	11.8	6.06	48.3
			20	26.1	4.29	30.4	13.4	6.10	13.6	26.9	4.32	31.2	15.5	6.24	27.0	27.3	4.27	31.6	16.6	6.40	44.4
			25	27.7	4.35	32.1	18.0	6.38	12.4	28.4	4.39	32.8	20.2	6.49	24.7	28.8	4.33	33.1	21.4	6.65	40.5
			30	29.1	4.42	33.5	22.6	6.58	10.7	29.7	4.46	34.2	25.0	6.66	21.6	30.0	4.39	34.4	26.2	6.83	36.7
	1.43	27.3	10	22.6	4.07	26.7	4.3	5.55	17.6	23.4	4.09	27.5	6.1	5.73	33.2	23.9	4.06	27.9	7.0	5.88	53.9
			15	24.7	4.12	28.8	8.8	5.98	15.4	25.5	4.15	29.7	10.7	6.15	29.6	25.9	4.11	30.0	11.7	6.31	48.3
			20	26.5	4.18	30.7	13.3	6.35	13.6	27.3	4.21	31.5	15.4	6.49	27.0	27.7	4.16	31.9	16.5	6.66	44.4
			25	28.2	4.25	32.4	17.9	6.63	12.4	28.9	4.28	33.2	20.2	6.75	24.7	29.2	4.22	33.4	21.3	6.92	40.5
			30	29.5	4.31	33.9	22.5	6.85	10.7	30.2	4.35	34.5	24.9	6.93	21.6	30.4	4.28	34.7	26.2	7.11	36.7
	1.89	42.0	10	22.9	3.98	26.9	4.2	5.77	17.6	23.8	4.00	27.8	6.0	5.95	33.2	24.2	3.97	28.2	6.9	6.11	53.9
			15	25.0	4.03	29.1	8.7	6.22	15.4	25.9	4.05	29.9	10.7	6.39	29.6	26.3	4.01	30.3	11.7	6.55	48.3
			20	26.9	4.09	31.0	13.2	6.59	13.6	27.7	4.11	31.9	15.3	6.74	27.0	28.1	4.07	32.2	16.4	6.91	44.4
			25	28.6	4.15	32.7	17.8	6.89	12.4	29.3	4.18	33.5	20.1	7.01	24.7	29.6	4.12	33.8	21.3	7.19	40.5
			30	30.0	4.21	34.2	22.4	7.12	10.7	30.6	4.25	34.9	24.9	7.20	21.6	30.9	4.18	35.1	26.1	7.38	36.7
20	0.95	13.4	10	22.2	5.05	27.2	4.4	4.40	17.6	23.0	5.06	28.1	6.1	4.55	33.2	23.4	5.09	28.5	7.0	4.61	53.9
			15	24.2	5.04	29.3	8.9	4.81	15.4	25.0	5.06	30.1	10.8	4.94	29.6	25.4	5.08	30.5	11.8	5.00	48.3
			20	26.0	5.11	31.1	13.4	5.10	13.6	26.8	5.15	31.9	15.5	5.20	27.0	27.1	5.16	32.3	16.6	5.26	44.4
			25	27.6	5.20	32.8	18.0	5.30	12.4	28.2	5.25	33.5	20.3	5.37	24.7	28.5	5.25	33.8	21.4	5.44	40.5
			30	28.9	5.32	34.2	22.7	5.43	10.7	29.4	5.39	34.8	25.1	5.46	21.6	29.7	5.37	35.0	26.2	5.53	36.7
	1.43	24.5	10	22.5	4.92	27.4	4.3	4.57	17.6	23.4	4.94	28.3	6.1	4.73	33.2	23.8	4.96	28.7	7.0	4.79	53.9
			15	24.6	4.91	29.5	8.8	5.00	15.4	25.4	4.94	30.3	10.7	5.14	29.6	25.8	4.96	30.8	11.7	5.21	48.3
			20	26.4	4.98	31.4	13.3	5.30	13.6	27.2	5.02	32.2	15.4	5.41	27.0	27.5	5.03	32.6	16.5	5.47	44.4
			25	28.0	5.07	33.1	17.9	5.52	12.4	28.7	5.13	33.8	20.2	5.59	24.7	29.0	5.12	34.1	21.3	5.66	40.5
			30	29.3	5.19	34.5	22.6	5.65	10.7	29.9	5.26	35.1	25.0	5.68	21.6	30.1	5.24	35.4	26.2	5.75	36.7
	1.89	37.9	10	22.9	4.81	27.7	4.2	4.75	17.6	23.7	4.82	28.5	6.0	4.92	33.2	24.1	4.85	29.0	6.9	4.98	53.9
			15	25.0	4.80	29.8	8.7	5.20	15.4	25.8	4.83	30.6	10.7	5.34	29.6	26.2	4.84	31.0	11.7	5.41	48.3
			20	26.8	4.87	31.7	13.2	5.51	13.6	27.6	4.91	32.5	15.4	5.62	27.0	28.0	4.91	32.9	16.5	5.69	44.4
			25	28.4	4.96	33.4	17.8	5.73	12.4	29.1	5.01	34.1	20.1	5.81	24.7	29.4	5.01	34.4	21.3	5.88	40.5
			30	29.7	5.07	34.8	22.5	5.87	10.7	30.3	5.14	35.5	24.9	5.90	21.6	30.6	5.12	35.7	26.1	5.97	36.7
30	0.95	10.6	10	21.9	6.10	28.0	4.5	3.59	17.6	22.7	6.11	28.8	6.2	3.72	33.2	23.1	6.18	29.3	7.1	3.74	53.9
			15	23.9	6.15	30.1	8.9	3.90	15.4	24.7	6.18	30.9	10.8	4.01	29.6	25.1	6.24	31.4	11.8	4.03	48.3
			20	25.8	6.23	32.0	13.5	4.13	13.6	26.5	6.28	32.8	15.6	4.22	27.0	26.9	6.34	33.2	16.6	4.24	44.4
			25	27.3	6.36	33.7	18.1	4.30	12.4	28.0	6.43	34.4	20.3	4.35	24.7	28.3	6.47	34.7	21.4	4.37	40.5
			30	28.6	6.53	35.1	22.8	4.38	10.7	29.1	6.63	35.8	25.1	4.39	21.6	29.4	6.65	36.0	26.3	4.42	36.7
	1.43	21.1	10	22.2	5.95	28.2	4.4	3.73	17.6	23.1	5.96	29.0	6.1	3.87	33.2	23.5	6.03	29.5	7.0	3.90	53.9
			15	24.3	6.00	30.3	8.9	4.05	15.4	25.1	6.03	31.1	10.8	4.17	29.6	25.5	6.09	31.6	11.8	4.19	48.3
			20	26.1	6.08	32.2	13.4	4.30	13.6	26.9	6.13	33.0	15.5	4.39	27.0	27.3	6.18	33.4	16.6	4.41	44.4
			25	27.7	6.20	33.9	18.0	4.47	12.4	28.4	6.28	34.7	20.2	4.52	24.7	28.7	6.31	35.0	21.4	4.54	40.5
			30	29.0	6.37	35.4	22.7	4.56	10.7	29.6	6.47	36.0	25.0	4.57	21.6	29.8	6.48	36.3	26.2	4.60	36.7
	1.89	34.5	10	22.6	5.82	28.4	4.3	3.88	17.6	23.4	5.83	29.2	6.1	4.02	33.2	23.8	5.89	29.7	7.0	4.05	53.9
			15	24.7	5.86	30.5	8.8	4.21	15.4	25.5	5.89	31.4	10.7	4.33	29.6	25.9	5.95	31.9	11.7	4.36	48.3
			20	26.5	5.94	32.5	13.3	4.47	13.6	27.3	5.99	33.3	15.4	4.56	27.0	27.7	6.04	33.7	16.5	4.58	44.4
			25	28.1	6.06	34.2	17.9	4.64	12.4	28.8	6.13	34.9	20.2	4.70	24.7	29.1	6.17	35.3	21.3	4.72	40.5
			30	29.5	6.22	35.7	22.6	4.74	10.7	30.0	6.32	36.3	25.0	4.75	21.6	30.3	6.34	36.6	26.2	4.78	36.7
40	0.95	8.9	10	20.6	7.52	28.1	4.8	2.73	17.6	21.4	7.56	29.0	6.4	2.83	33.2	21.9	7.50	29.4	7.2	2.91	53.9
			15	22.8	7.64	30.5	9.2	2.99	15.4	23.7	7.70	31.4	11.0	3.08	29.6	24.1	7.62	31.7	12.0	3.16	48.3
			20	24.8	7.78	32.6	13.7	3.19	13.6	25.6	7.85	33.5	15.7	3.27	27.0	26.0	7.75	33.8	16.7	3.36	44.4
			25	26.6	7.94	34.5	18.3	3.35	12.4	27.3	8.02	35.3	20.4	3.40	24.7	27.6	7.90	35.5	21.5	3.50	40.5
			30	28.0	8.11	36.1	22.9	3.46	10.7	28.6	8.20	36.9	25.2	3.49	21.6	28.9	8.06	37.0	26.3	3.59	36.7
	1.43	19.2	10	20.9	7.34	28.2	4.7	2.85	17.6	21.8	7.38	29.1	6.4	2.95	33.2	22.2	7.32	29.5	7.2	3.03	53.9
			15	23.2	7.46	30.6	9.1	3.11	15.4	24.0	7.51	31.5	11.0	3.20	29.6	24.5	7.43	31.9	11.9	3.29	48.3
			20	25.2	7.59	32.8	13.6	3.32	13.6	26.0	7.66	33.7	15.6	3.40	27.0	26.4	7.56	34.0	16.7	3.49	44.4
			25	27.0	7.74	34.7	18.2	3.48	12.4	27.7	7.82	35.5	20.4	3.54	24.7	28.1	7.70	35.8	21.5	3.64	40.5
			30	28.5	7.91	36.4	22.8	3.60	10.7	29.1	8.00	37.1	25.1	3.63	21.6	29.4	7.86	37.2	26.3	3.74	36.7
	1.89	31.4	10	21.2	7.17	28.4	4.6	2.96	17.6	22.1	7.21	29.3	6.3	3.06	33.2	22.5	7.15	29.7	7.2	3.15	53.9
			15	23.5	7.29	30.8	9.1	3.23	15.4	24.4	7.34	31.7	10.9	3.32	29.6	24.8	7.26	32.1	11.9	3.42	48.3
			20	25.6	7.42	33.0	13.5	3.45	13.6	26.4	7.48	33.9	15.6	3.53	27.0	26.8	7.39	34.2	16.6	3.63	44.4
			25	27.4	7.57	34.9	18.1	3.62	12.4	28.1	7.64	35.8	20.3	3.68	24.7	28.5	7.53	36.0	21.4	3.78	40.5
			30	28.9	7.73	36.6	22.7	3.74	10.7	29.5	7.82	37.3	25.0	3.77	21.6	29.8	7.68	37.5	26.2	3.88	36.7

Rev: 04/16/02 B

Interpolation is permissible, extrapolation is not.

All performance data is based upon the lower voltage of dual voltage rated units.

All performance data is based upon a load coaxial heat exchanger of single-walled copper construction. For vented double-walled performance consult the factory.

ClimateMaster works continually to improve its products. As a result, the design and specifications of each product at the time of order may be changed without notice and may not be as described herein. Please contact ClimateMaster's Customer Service Department at 1-405-745-6000 for specific information on the current design and specifications. Statements and other information contained herein are not express warranties and do not form the basis of any bargain between the parties, but are merely ClimateMaster's opinion or commendation of its products. The latest version of this document is available at www.climatemaster.com.

GSW Series 50Hz - R407c Submittal Data Eng/SI

CLIMATEMASTER®

Contractor:	*P.O.:*
Engineer:	
Project Name:	*Unit Tag:*

PERFORMANCE DATA
GSW120 HEATING

SOURCE			LOAD																		
ESWT	Flow	WPD	ELWT	Flow 0.95 l/s						Flow 1.43 l/s						Flow 1.89 l/s					
°C	l/s	kPa	°C	HC kW	PI kW	HE kW	LWT °C	COP W/W	WPD kPa	HC kW	PI kW	HE kW	LWT °C	COP W/W	WPD kPa	HC kW	PI kW	HE kW	LWT °C	COP W/W	WPD kPa
-5	1.89	76.3	20	20.4	4.84	15.6	25.2	4.22	15.4	20.6	4.69	15.9	23.5	4.39	29.6	20.7	4.62	16.1	22.6	4.48	48.3
			30	19.2	5.73	13.5	34.9	3.36	12.4	19.5	5.55	13.9	33.3	3.50	24.7	19.6	5.47	14.1	32.5	3.58	40.5
			40	17.9	6.83	11.1	44.5	2.62	8.7	18.1	6.63	11.5	43.0	2.74	18.8	18.3	6.53	11.7	42.3	2.80	33.8
			45	17.2	7.46	9.7	49.3	2.31	6.3	17.4	7.25	10.2	47.9	2.40	15.2	17.5	7.15	10.4	47.2	2.46	27.8
0	0.95	29.9	20	21.2	4.88	16.3	25.4	4.35	15.4	21.4	4.73	16.7	23.6	4.53	29.6	21.5	4.66	16.9	22.7	4.62	48.3
			30	20.0	5.77	14.2	35.1	3.46	12.4	20.2	5.60	14.6	33.4	3.61	24.7	20.3	5.51	14.8	32.6	3.69	40.5
			40	18.6	6.88	11.7	44.7	2.70	8.7	18.9	6.68	12.2	43.2	2.82	18.8	19.0	6.58	12.4	42.4	2.88	33.8
			45	17.9	7.51	10.3	49.5	2.38	6.3	18.1	7.30	10.8	48.0	2.48	15.2	18.2	7.20	11.0	47.3	2.53	27.8
	1.43	48.2	20	22.5	4.92	17.5	25.7	4.57	15.4	22.7	4.77	17.9	23.8	4.76	29.6	22.8	4.70	18.1	22.9	4.85	48.3
			30	21.2	5.83	15.3	35.3	3.63	12.4	21.4	5.64	15.8	33.6	3.79	24.7	21.5	5.56	16.0	32.7	3.87	40.5
			40	19.7	6.94	12.8	45.0	2.84	8.7	20.0	6.74	13.2	43.3	2.96	18.8	20.1	6.64	13.5	42.5	3.03	33.8
			45	18.9	7.58	11.3	49.8	2.50	6.3	19.2	7.37	11.8	48.2	2.60	15.2	19.3	7.26	12.0	47.4	2.66	27.8
	1.89	71.0	20	23.5	4.94	18.5	25.9	4.75	15.4	23.7	4.79	18.9	24.0	4.95	29.6	23.8	4.72	19.1	23.0	5.05	48.3
			30	22.1	5.85	16.3	35.6	3.78	12.4	22.4	5.67	16.7	33.8	3.95	24.7	22.5	5.58	16.9	32.8	4.03	40.5
			40	20.6	6.97	13.6	45.2	2.95	8.7	20.9	6.77	14.1	43.5	3.08	18.8	21.0	6.67	14.3	42.7	3.15	33.8
			45	19.8	7.61	12.2	50.0	2.60	6.3	20.0	7.40	12.6	48.4	2.71	15.2	20.2	7.29	12.9	47.5	2.77	27.8
5	0.95	25.7	20	23.7	5.01	18.6	26.0	4.72	15.4	23.9	4.84	19.0	24.0	4.93	29.6	23.9	4.76	19.2	23.0	5.03	48.3
			30	22.5	5.95	16.6	35.7	3.79	12.4	22.8	5.74	17.0	33.8	3.97	24.7	22.9	5.64	17.3	32.9	4.06	40.5
			40	21.0	7.09	14.0	45.3	2.97	8.7	21.4	6.86	14.5	43.6	3.11	18.8	21.5	6.74	14.8	42.7	3.19	33.8
			45	20.2	7.74	12.4	50.1	2.61	6.3	20.5	7.50	13.0	48.4	2.73	15.2	20.7	7.38	13.3	47.6	2.80	27.8
	1.43	42.7	20	25.1	5.06	20.0	26.3	4.95	15.4	25.3	4.88	20.4	24.2	5.17	29.6	25.4	4.80	20.6	23.2	5.28	48.3
			30	23.9	6.00	17.9	36.0	3.98	12.4	24.1	5.79	18.3	34.0	4.17	24.7	24.3	5.69	18.6	33.1	4.27	40.5
			40	22.3	7.15	15.1	45.6	3.11	8.7	22.6	6.92	15.7	43.8	3.27	18.8	22.8	6.80	16.0	42.9	3.35	33.8
			45	21.4	7.81	13.6	50.4	2.73	6.3	21.7	7.56	14.2	48.6	2.87	15.2	21.9	7.44	14.4	47.8	2.94	27.8
	1.89	63.7	20	26.2	5.08	21.1	26.6	5.16	15.4	26.4	4.90	21.5	24.4	5.38	29.6	26.5	4.82	21.7	23.3	5.50	48.3
			30	24.9	6.02	18.9	36.3	4.14	12.4	25.2	5.81	19.4	34.2	4.34	24.7	25.3	5.71	19.6	33.2	4.44	40.5
			40	23.3	7.18	16.1	45.9	3.24	8.7	23.6	6.94	16.7	44.0	3.40	18.8	23.8	6.83	17.0	43.0	3.48	33.8
			45	22.3	7.84	14.5	50.6	2.85	6.3	22.7	7.59	15.1	48.8	2.99	15.2	22.9	7.47	15.4	47.9	3.06	27.8
10	0.95	21.7	20	26.0	5.13	20.8	26.6	5.06	15.4	26.1	4.94	21.2	24.4	5.29	29.6	26.2	4.84	21.3	23.3	5.41	48.3
			30	25.0	6.10	18.9	36.3	4.09	12.4	25.2	5.86	19.4	34.2	4.31	24.7	25.4	5.75	19.6	33.2	4.41	40.5
			40	23.5	7.30	16.2	45.9	3.22	8.7	23.8	7.02	16.8	44.0	3.39	18.8	24.0	6.89	17.1	43.0	3.49	33.8
			45	22.6	7.98	14.6	50.7	2.83	6.3	23.0	7.69	15.3	48.9	2.99	15.2	23.2	7.55	15.6	47.9	3.07	27.8
	1.43	38.3	20	27.5	5.18	22.3	26.9	5.31	15.4	27.7	4.98	22.7	24.6	5.56	29.6	27.7	4.89	22.9	23.5	5.68	48.3
			30	26.4	6.16	20.3	36.7	4.30	12.4	26.7	5.91	20.8	34.5	4.52	24.7	26.9	5.80	21.1	33.4	4.63	40.5
			40	24.9	7.37	17.5	46.3	3.38	8.7	25.3	7.09	18.2	44.2	3.56	18.8	25.4	6.95	18.5	43.2	3.66	33.8
			45	23.9	8.05	15.9	51.0	2.97	6.3	24.3	7.76	16.6	49.1	3.13	15.2	24.5	7.62	16.9	48.1	3.22	27.8
	1.89	58.8	20	28.7	5.20	23.5	27.3	5.53	15.4	28.9	5.00	23.9	24.8	5.78	29.6	29.0	4.91	24.1	23.7	5.91	48.3
			30	27.6	6.18	21.4	37.0	4.47	12.4	27.9	5.94	22.0	34.7	4.70	24.7	28.1	5.82	22.2	33.5	4.82	40.5
			40	26.0	7.40	18.6	46.6	3.51	8.7	26.4	7.12	19.3	44.4	3.71	18.8	26.6	6.98	19.6	43.4	3.81	33.8
			45	25.0	8.08	16.9	51.3	3.09	6.3	25.4	7.79	17.6	49.3	3.26	15.2	25.6	7.65	18.0	48.2	3.35	27.8
15	0.95	20.1	20	28.0	5.24	22.8	27.1	5.36	15.4	28.2	5.02	23.2	24.7	5.61	29.6	28.2	4.92	23.3	23.6	5.74	48.3
			30	27.2	6.25	20.9	36.9	4.35	12.4	27.5	5.97	21.5	34.6	4.60	24.7	27.6	5.84	21.7	33.5	4.72	40.5
			40	25.8	7.49	18.3	46.5	3.44	8.7	26.1	7.18	19.0	44.4	3.64	18.8	26.3	7.03	19.3	43.3	3.75	33.8
			45	24.8	8.21	16.6	51.3	3.03	6.3	25.3	7.88	17.4	49.2	3.21	15.2	25.5	7.71	17.8	48.2	3.30	27.8
	1.43	36.4	20	29.7	5.28	24.4	27.5	5.62	15.4	29.8	5.06	24.8	25.0	5.89	29.6	29.9	4.96	24.9	23.8	6.02	48.3
			30	28.8	6.30	22.5	37.3	4.57	12.4	29.1	6.02	23.0	34.9	4.83	24.7	29.2	5.89	23.3	33.7	4.95	40.5
			40	27.3	7.56	19.7	46.9	3.61	8.7	27.7	7.24	20.4	44.6	3.82	18.8	27.9	7.09	20.8	43.5	3.93	33.8
			45	26.3	8.28	18.0	51.7	3.18	6.3	26.8	7.94	18.8	49.5	3.37	15.2	27.0	7.78	19.2	48.4	3.47	27.8
	1.89	55.5	20	31.0	5.30	25.7	27.8	5.85	15.4	31.2	5.08	26.1	25.2	6.13	29.6	31.2	4.98	26.2	23.9	6.27	48.3
			30	30.1	6.32	23.8	37.6	4.76	12.4	30.4	6.05	24.3	35.1	5.02	24.7	30.5	5.92	24.6	33.9	5.15	40.5
			40	28.5	7.59	20.9	47.2	3.76	8.7	28.9	7.27	21.7	44.9	3.98	18.8	29.1	7.12	22.0	43.7	4.09	33.8
			45	27.5	8.31	19.2	51.9	3.31	6.3	28.0	7.97	20.0	49.7	3.51	15.2	28.2	7.81	20.4	48.6	3.61	27.8
20	0.95	18.7	20	29.8	5.33	24.5	27.5	5.59	15.4	29.9	5.10	24.8	25.0	5.87	29.6	30.0	4.99	25.0	23.8	6.01	48.3
			30	29.0	6.36	22.6	37.3	4.56	12.4	29.3	6.07	23.2	34.9	4.82	24.7	29.4	5.93	23.5	33.7	4.96	40.5
			40	27.6	7.65	20.0	47.0	3.62	8.7	28.0	7.30	20.7	44.7	3.84	18.8	28.2	7.13	21.1	43.6	3.96	33.8
			45	OPERATION NOT RECOMMENDED						27.2	8.01	19.2	49.6	3.40	15.2	27.4	7.84	19.6	48.5	3.50	27.8
	1.43	34.4	20	31.6	5.37	26.2	28.0	5.87	15.4	31.7	5.14	26.5	25.3	6.17	29.6	31.7	5.03	26.7	24.0	6.31	48.3
			30	30.7	6.42	24.3	37.8	4.79	12.4	31.0	6.12	24.9	35.2	5.07	24.7	31.1	5.98	25.1	33.9	5.21	40.5
			40	29.3	7.71	21.6	47.4	3.80	8.7	29.7	7.36	22.3	45.0	4.03	18.8	29.9	7.20	22.7	43.8	4.15	33.8
			45	OPERATION NOT RECOMMENDED						28.8	8.08	20.7	49.8	3.57	15.2	29.0	7.90	21.1	48.7	3.68	27.8
	1.89	53.1	20	33.0	5.40	27.6	28.3	6.11	15.4	33.1	5.16	27.9	25.6	6.42	29.6	33.1	5.05	28.1	24.2	6.56	48.3
			30	32.1	6.44	25.6	38.1	4.98	12.4	32.4	6.14	26.2	35.4	5.27	24.7	32.5	6.00	26.5	34.1	5.42	40.5
			40	30.6	7.74	22.8	47.7	3.95	8.7	31.0	7.39	23.6	45.2	4.20	18.8	31.2	7.22	24.0	43.9	4.32	33.8
			45	OPERATION NOT RECOMMENDED						30.1	8.12	22.0	50.1	3.71	15.2	30.3	7.94	22.4	48.8	3.82	27.8

Rev: 03/01/02 B

Interpolation is permissible, extrapolation is not.
All performance data is based upon the lower voltage of dual voltage rated units.
All performance data is based upon a load coaxial heat exchanger of single-walled copper construction. For vented double-walled performance consult the factory.
Operation below 5°C is based upon 15% antifreeze solution

ClimateMaster works continually to improve its products. As a result, the design and specifications of each product at the time of order may be changed without notice and may not be as described herein. Please contact ClimateMaster's Customer Service Department at 1-405-745-6000 for specific information on the current design and specifications. Statements and other information contained herein are not express warranties and do not form the basis of any bargain between the parties, but are merely ClimateMaster's opinion or commendation of its products. The latest version of this document is available at www.climatemaster.com.

GSW Series 50Hz - R407c Submittal Data Eng/SI

CLIMATEMASTER®

Contractor:	*P.O.:*
Engineer:	
Project Name:	*Unit Tag:*

GSW PHYSICAL DATA

Model	036	060	120
Compressor/qty	Scroll/1		Scroll/2
Factory Charge each circuit - (oz.) [kg]	46 [1.31]	66 [1.88]	66 [1.88]
Indoor/Load Water Connection Size			
Swivel - Distributor Class	1"	1"	1-1/2"
FPT - All Other	3/4"	1"	1-1/2"
Outdoor/Source Water Connection Size			
Swivel - Distributor Class	1"	1"	1-1/2"
FPT - All Other	3/4"	1"	1-1/2"
HWG Water Connection Size			
Swivel - Distributor Class	1"	1"	-
FPT - All Other	1/2"	1/2"	-
Weight - Operating - lbs. [kg]	236 [107]	343 [156]	725 [329]
Weight - Packaged - lbs. [kg]	255 [116]	362 [164]	765 [347]

Rev.: 03/12/02 B

Spring mounted compressor
Balanced Port Expansion Valve
Insulated Indoor and Outdoor Water Coils
Compressor on (Green) and Fault (Red) Light
CXM or DXM Micriprocessor Controller
Check serial plate for refrigerant type.

GSW UNIT ELECTRICAL DATA

Model	Product Class -	Rated Voltage	Voltage Min/Max	Compressor			Optional HWG Pump FLA	Total Unit FLA	Min Circ Amp	Max Fuse/ HACR
				RLA(EA)	LRA(EA)	Qty				
036	Residential	220-240/50/1	198/264	14.3	74.0	1.0	0.4	14.7	18.3	30
		380-420/50/3		5.4	35.0	1.0	0.4	5.8	7.2	15
	Commercial	220-240/50/1	198/264	14.3	74.0	1.0	-	14.3	17.9	30
		380-420/50/3	342/462	5.4	35.0	1.0	-	5.4	6.8	15
060	Residential	380-420/50/3	342/462	8.2	61.8	1.0	0.4	8.6	10.6	15
	Commercial	380-420/50/3	342/462	8.2	61.8	1.0	-	8.2	10.3	15
120	Commercial & Residential	380-420/50/3	342/462	8.2	61.8	2.0	-	16.4	18.5	25

HACR circuit breaker in USA only

Rev.: 03/12/02 B

Distributor Class units (036-060 only) come standard with 75VA transformer, loop pump and HWG connections.

ClimateMaster works continually to improve its products. As a result, the design and specifications of each product at the time of order may be changed without notice and may not be as described herein. Please contact ClimateMaster's Customer Service Department at 1-405-745-6000 for specific information on the current design and specifications. Statements and other information contained herein are not express warranties and do not form the basis of any bargain between the parties, but are merely ClimateMaster's opinion or commendation of its products. The latest version of this document is available at www.climatemaster.com.

GSW Series 50Hz - R407c Submittal Data Eng/SI

CLIMATEMASTER®

GSW036 & 060

DIMENSIONAL DATA

Contractor:	*P.O.:*
Engineer:	
Project Name:	*Unit Tag:*

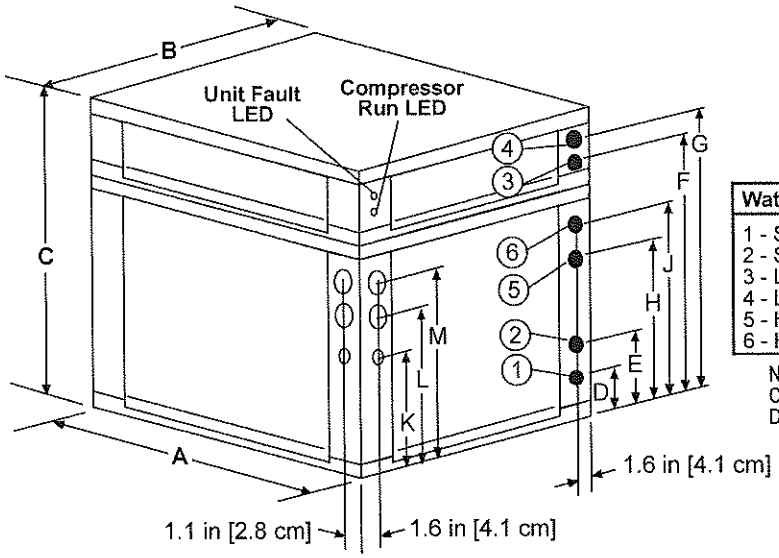

Water Connection	036	060
1 - Source Water In	3/4" FPT	1" FPT
2 - Source Water Out	3/4" FPT	1" FPT
3 - Load Water In	3/4" FPT	1" FPT
4 - Load Water Out	3/4" FPT	1" FPT
5 - HWG Water In	1/2" FPT	1/2" FPT
6 - HWG Water Out	1/2" FPT	1/2" FPT

Note:
Commercial Class Connections Shown
Distributor Class Utilizes 1" Swivel Throughout

Rev.: 03/12/02 B

Water to Water		Overall Cabinet			Water Connections						Electric Knockouts		
					1	2	3	4	5	6			
		A Depth	B Width	C Height	D Source (Outdoor) Water In	E Source (Outdoor) Water Out	F Load (Indoor) Water In	G Load (Indoor) Water Out	H HWG In	J HWG Out	K Low Voltage	L Ext Pump	M Power Supply
036	in.	25.6	22.4	29.5	2.4	5.4	22.7	26.1	13.9	16.9	5.6	9.6	12.1
	cm.	65.1	56.8	74.9	6.1	13.7	57.5	66.3	35.3	42.9	15.2	24.1	30.5
060	in.	30.6	25.4	33.0	2.4	5.4	26.8	30.9	15.6	18.9	8.1	11.6	14.1
	cm.	77.8	64.5	83.8	6.1	13.7	68.1	78.4	40.4	48.0	20.3	29.2	35.6

Rev.: 10/03/01B

ClimateMaster works continually to improve its products. As a result, the design and specifications of each product at the time of order may be changed without notice and may not be as described herein. Please contact ClimateMaster's Customer Service Department at 1-405-745-6000 for specific information on the current design and specifications. Statements and other information contained herein are not express warranties and do not form the basis of any bargain between the parties, but are merely ClimateMaster's opinion or commendation of its products. The latest version of this document is available at www.climatemaster.com.

GSW Series 50Hz - R407c Submittal Data Eng/SI

CLIMATEMASTER®

GSW120

DIMENSIONAL DATA

Contractor:	*P.O.:*
Engineer:	
Project Name:	*Unit Tag:*

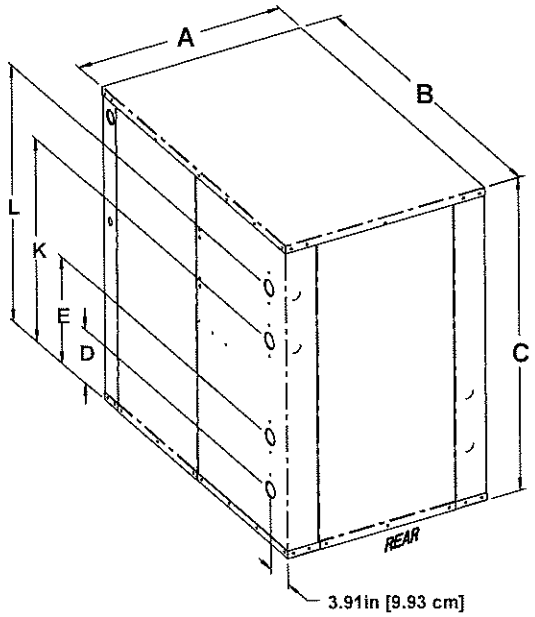

Right Water Connections

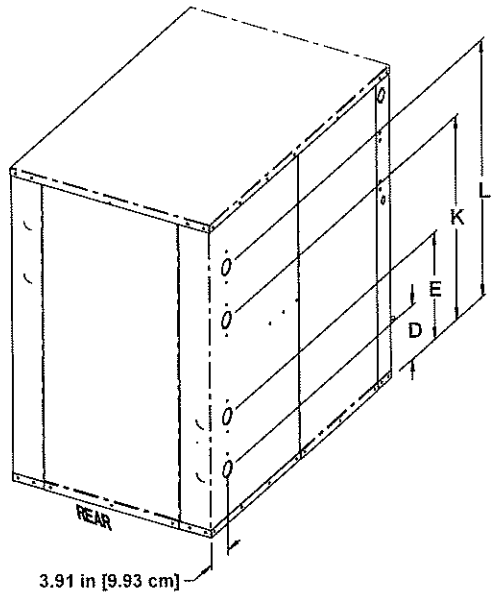

Left Water Connections

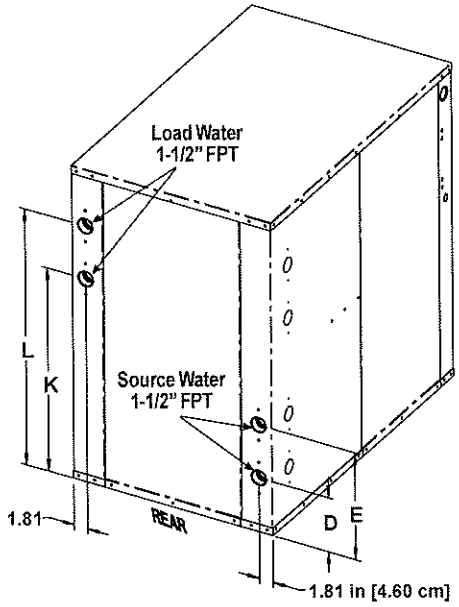

Rear Water Connections

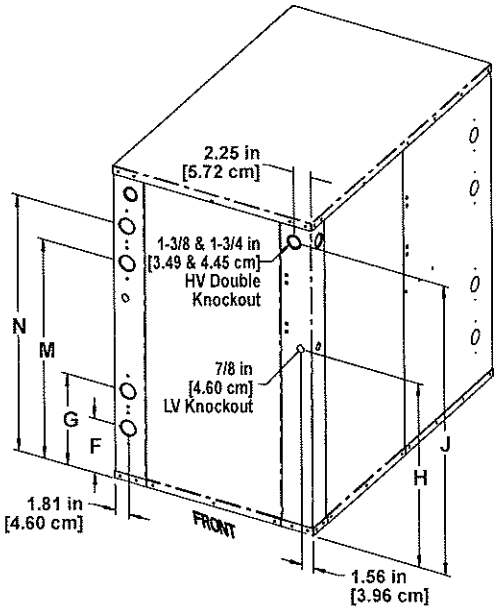

Front Water Connections

Rev.: 03/12/02 B

Water to Water		Overall Cabinet			Source Water Connections				Elect Knock		Load Water Connections			
		A	B	C	D	E	F	G	H	J	K	L	M	N
		Width	Depth	Height	Source (Outdoor) Water In	Source (Outdoor) Water Out	Source (Outdoor) Water In	Source (Outdoor) Water Out	Low Voltage	Power Supply	Load (Indoor) Water In	Load (Indoor) Water Out	Load (Indoor) Water In	Load (Indoor) Water Out
120	in.	26.0	41.1	40.1	6.9	13.7	6.9	11.7	23.6	37.1	26.0	32.8	28.1	32.8
	cm.	66.0	104.5	101.9	17.6	34.8	17.6	29.6	59.9	94.1	66.2	83.4	71.3	83.4

Rev.: 10/03/01B

ClimateMaster works continually to improve its products. As a result, the design and specifications of each product at the time of order may be changed without notice and may not be as described herein. Please contact ClimateMaster's Customer Service Department at 1-405-745-6000 for specific information on the current design and specifications. Statements and other information contained herein are not express warranties and do not form the basis of any bargain between the parties, but are merely ClimateMaster's opinion or commendation of its products. The latest version of this document is available at www.climatemaster.com.

GSW Series 50Hz - R407c Submittal Data Eng/SI

CLIMATEMASTER®

Contractor:	*P.O.:*
Engineer:	
Project Name:	*Unit Tag:*

GSW036 WIRING DIAGRAM
220-240/50/1 CXM CE
COMMERCIAL CLASS

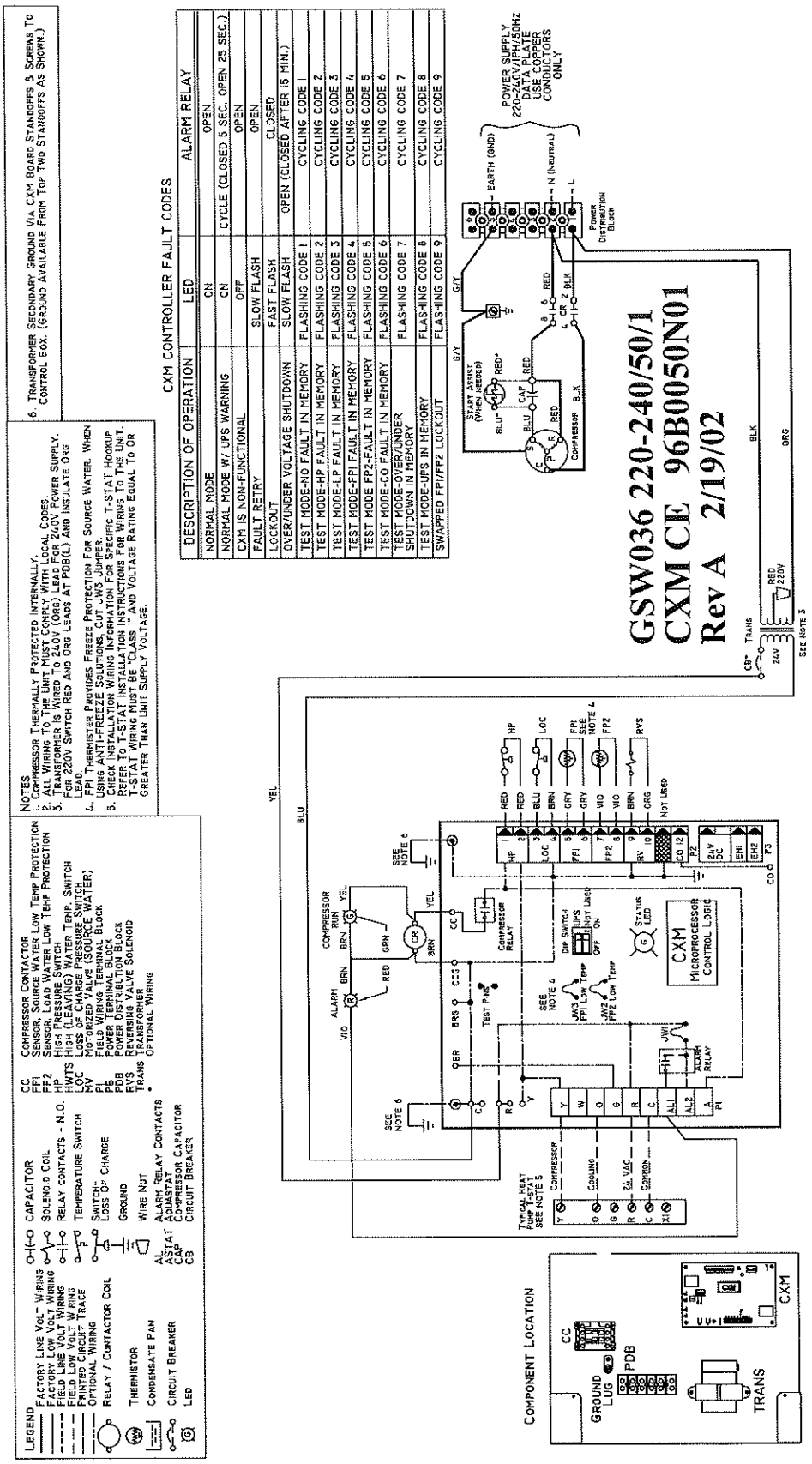

ClimateMaster works continually to improve its products. As a result, the design and specifications of each product at the time of order may be changed without notice and may not be as described herein. Please contact ClimateMaster's Customer Service Department at 1-405-745-6000 for specific information on the current design and specifications. Statements and other information contained herein are not express warranties and do not form the basis of any bargain between the parties, but are merely ClimateMaster's opinion or commendation of its products. The latest version of this document is available at www.climatemaster.com.

GSW Series 50Hz - R407c Submittal Data Eng/SI

CLIMATEMASTER®

Contractor:	*P.O.:*
Engineer:	
Project Name:	*Unit Tag:*

GSW036 WIRING DIAGRAM
220-240/50/1 DXM CE
COMMERCIAL CLASS

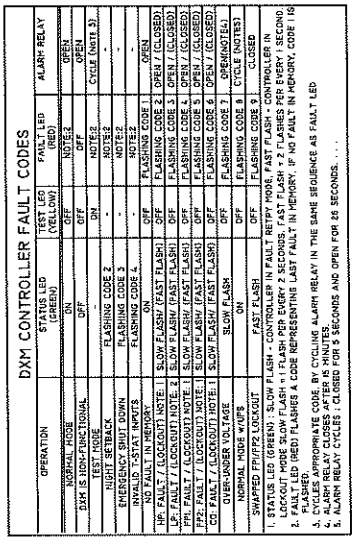

DXM CONTROLLER FAULT CODES

OPERATION	STATUS LED (GREEN)	TEST LED (YELLOW)	FAULT LED (RED)	ALARM RELAY
NORMAL MODE	ON	OFF	NOTE 2	OPEN
DXM IS NON-FUNCTIONAL	OFF	OFF	OFF	OPEN
TEST MODE	-	ON	NOTE 2	CYCLE (NOTE 3)
NIGHT SETBACK	FLASHING CODE 2	-	NOTE 2	-
EMERGENCY SHUT DOWN	FLASHING CODE 3	-	NOTE 2	-
INVALID T-STAT INPUTS	FLASHING CODE 4	-	NOTE 2	-
NO FAULT IN MEMORY	ON	OFF	FLASHING CODE 1	OPEN
HP1 FAULT / (LOCKOUT) NOTE 1	SLOW FLASH/ (FAST FLASH)	OFF	FLASHING CODE 2	OPEN / (CLOSED)
LP1 FAULT / (LOCKOUT) NOTE 1	SLOW FLASH/ (FAST FLASH)	OFF	FLASHING CODE 3	OPEN / (CLOSED)
HP2 FAULT / (LOCKOUT) NOTE 1	SLOW FLASH/ (FAST FLASH)	OFF	FLASHING CODE 4	OPEN / (CLOSED)
LP2 FAULT / (LOCKOUT) NOTE 1	SLOW FLASH/ (FAST FLASH)	OFF	FLASHING CODE 5	OPEN / (CLOSED)
CO FAULT / (LOCKOUT) NOTE 1	SLOW FLASH/ (FAST FLASH)	OFF	FLASHING CODE 6	OPEN / (CLOSED)
OVER-UNDER VOLTAGE	SLOW FLASH	OFF	FLASHING CODE 7	OPEN(NOTE 4)
NORMAL MODE W/UPS	ON	OFF	FLASHING CODE 8	CYCLE (NOTE 3)
SWAPPED FP1/FP2 LOCKOUT	FAST FLASH	OFF	FLASHING CODE 9	CLOSED

1. STATUS LED (GREEN) - SLOW FLASH - CONTROLLER IN FAULT RETRY MODE, FAST FLASH - CONTROLLER IN LOCKOUT MODE SLOW FLASH =1 FLASH PER EVERY 2 SECONDS, FAST FLASH = 2 FLASHES PER EVERY 1 SECOND
2. FAULT LED (RED) FLASHES A CODE REPRESENTING LAST FAULT IN MEMORY. IF NO FAULT IN MEMORY, CODE 1 IS FLASHED.
3. CYCLES APPROPRIATE CODE BY CYCLING ALARM RELAY IN THE SAME SEQUENCE AS FAULT LED
4. ALARM RELAY CLOSES AFTER 15 MINUTES.
5. ALARM RELAY CYCLES : CLOSED FOR 5 SECONDS AND OPEN FOR 25 SECONDS. . . .

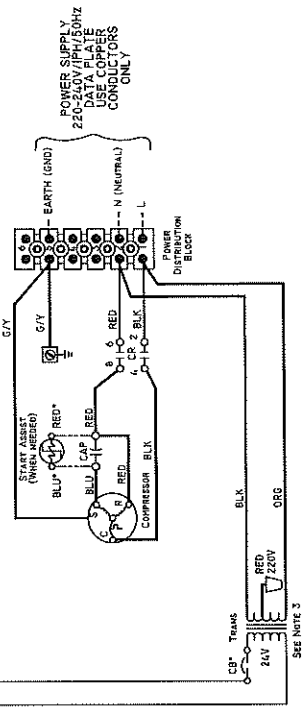

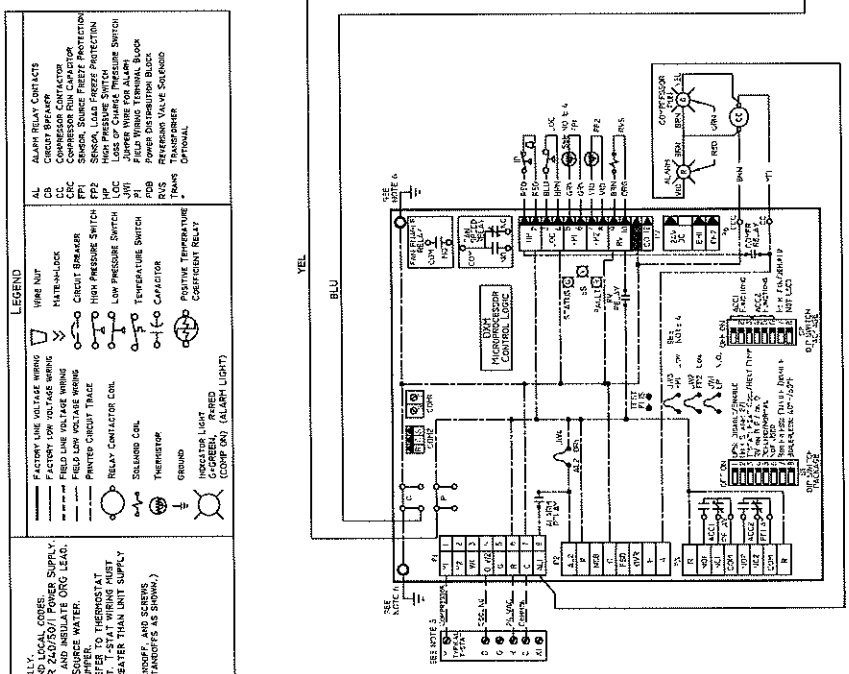

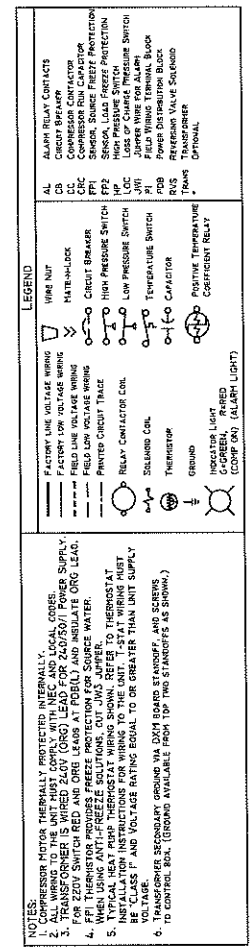

NOTES:
1. COMPRESSOR MOTOR THERMALLY PROTECTED INTERNALLY.
2. ALL WIRING TO THE UNIT MUST COMPLY WITH NEC AND LOCAL CODES.
3. TRANSFORMER IS WIRED 240V (ORG) LEAD FOR 240/50/1 POWER SUPPLY. FOR 220V SWITCH RED AND ORG LEADS AS FOLLOWS: MOVE RED LEAD TO 220V AND MOVE ORG LEAD TO 240V.
4. FP1 THERMISTOR PROVIDES FREEZE PROTECTION FOR SOURCE WATER. WHEN USING ANTI-FREEZE SOLUTIONS, CUT JW3 JUMPER.
5. TYPICAL HEAT PUMP THERMOSTAT WIRING SHOWN. REFER TO THERMOSTAT INSTALLATION INSTRUCTIONS FOR WIRING TO THE UNIT. T-STAT WIRING MUST BE "CLASS 1" AND VOLTAGE RATING EQUAL TO OR GREATER THAN UNIT SUPPLY VOLTAGE.
6. TRANSFORMER SECONDARY GROUND VIA DXM BOARD STANDOFF, AND SCREWS TO CONTROL BOX. (GROUND AVAILABLE FROM TOP TWO STANDOFFS AS SHOWN.)

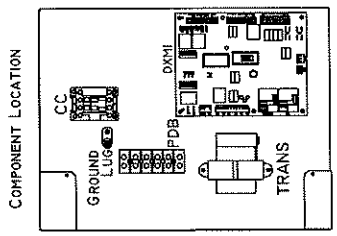

GSW036 220-240/50/1 DXM CE 96B0050N02 Rev A 2/20/02

ClimateMaster works continually to improve its products. As a result, the design and specifications of each product at the time of order may be changed without notice and may not be as described herein. Please contact ClimateMaster's Customer Service Department at 1-405-745-6000 for specific information on the current design and specifications. Statements and other information contained herein are not express warranties and do not form the basis of any bargain between the parties, but are merely ClimateMaster's opinion or commendation of its products. The latest version of this document is available at www.climatemaster.com.

GSW Series 50Hz - R407c Submittal Data Eng/SI

CLIMATEMASTER®

Contractor:	P.O.:
Engineer:	
Project Name:	Unit Tag:

GSW036, 060 WIRING DIAGRAM
380-420/50/3 CXM CE
COMMERCIAL CLASS

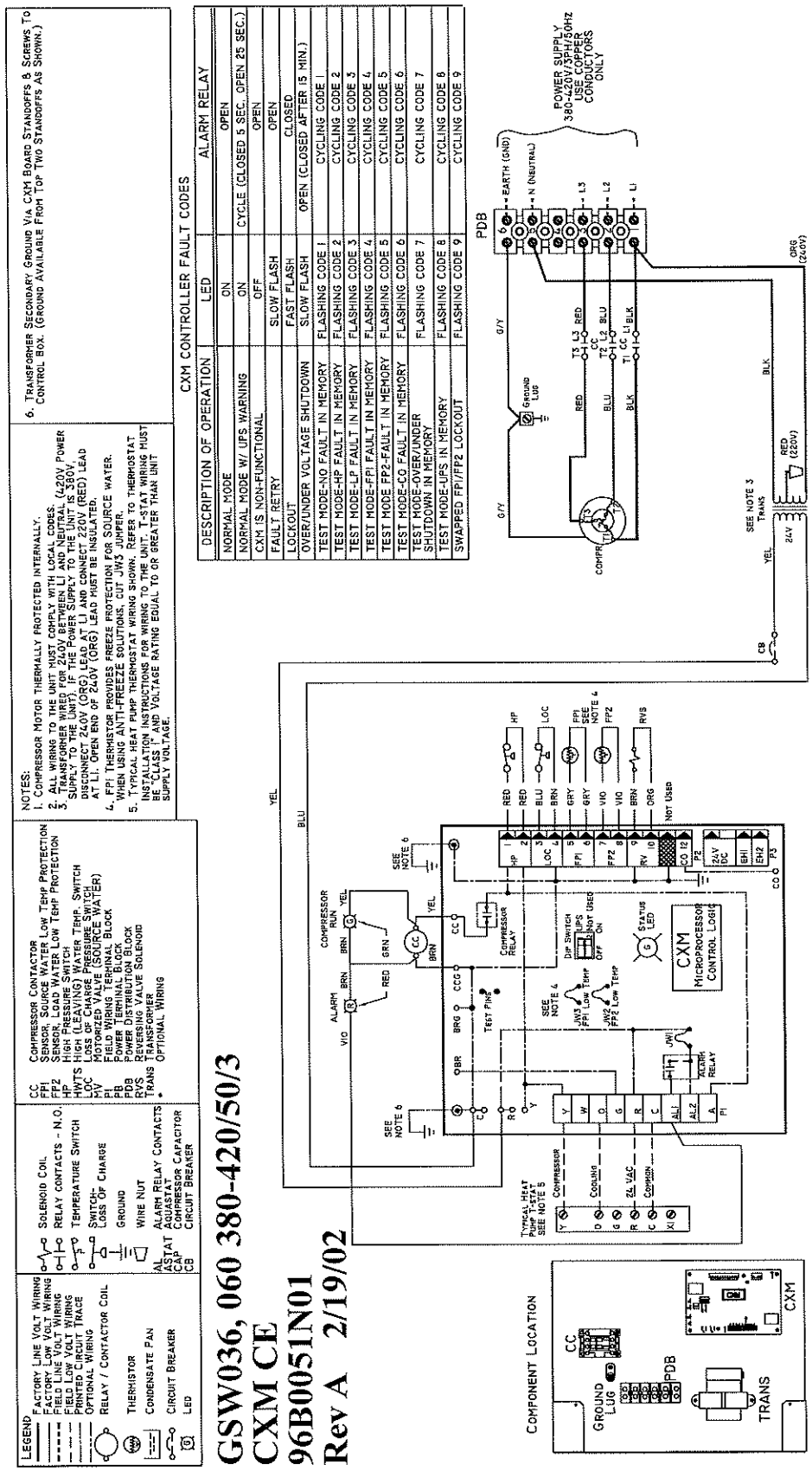

ClimateMaster works continually to improve its products. As a result, the design and specifications of each product at the time of order may be changed without notice and may not be as described herein. Please contact ClimateMaster's Customer Service Department at 1-405-745-6000 for specific information on the current design and specifications. Statements and other information contained herein are not express warranties and do not form the basis of any bargain between the parties, but are merely ClimateMaster's opinion or commendation of its products. The latest version of this document is available at www.climatemaster.com.

GSW Series 50Hz - R407c Submittal Data Eng/SI

CLIMATEMASTER®

Contractor:	P.O.:
Engineer:	
Project Name:	Unit Tag:

GSW036-060 WIRING DIAGRAM
380-420/50/3 DXM CE
COMMERCIAL CLASS

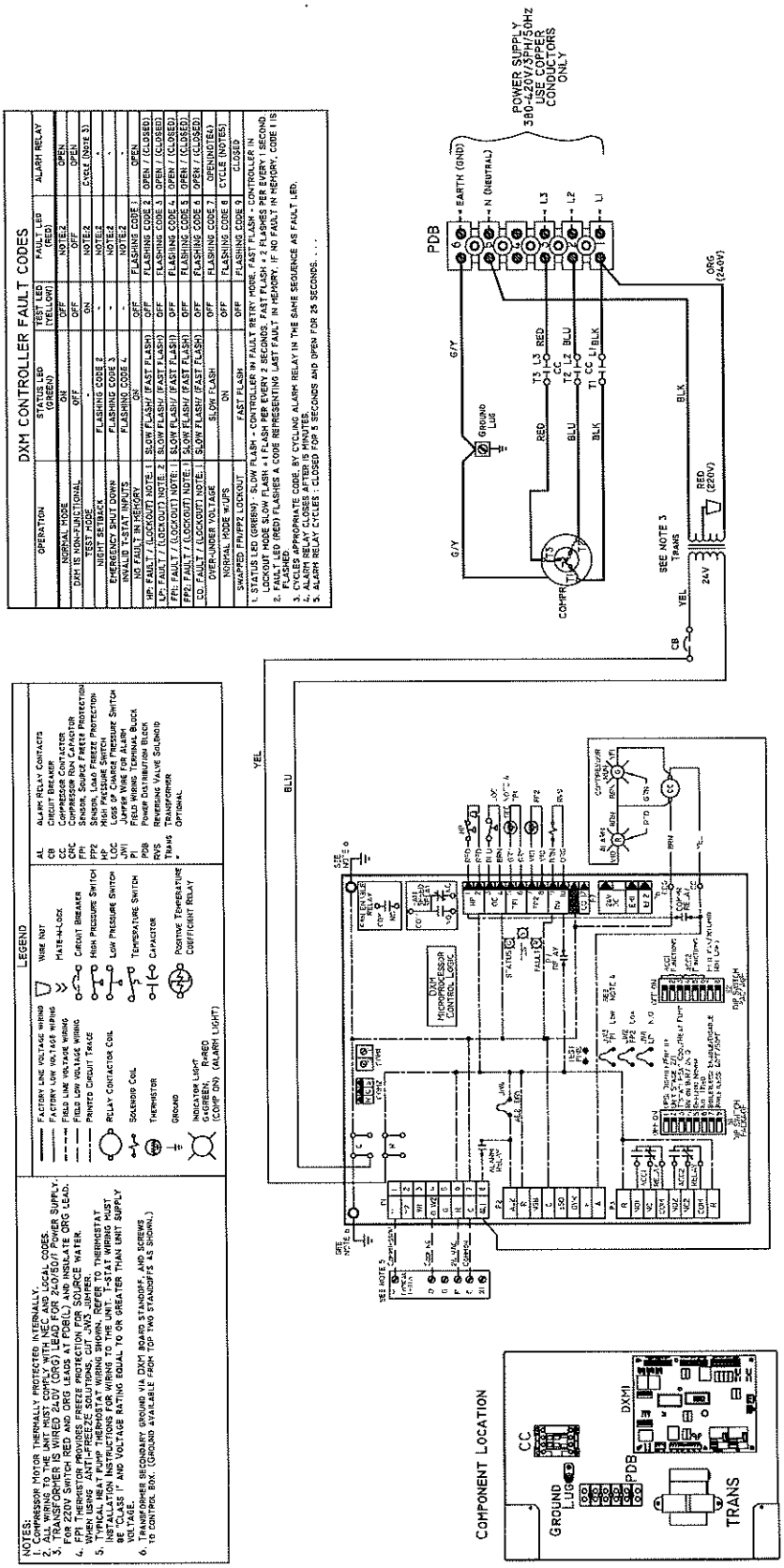

GSW036, 060 380-420/50/3 DXM CE 96B0051N02 Rev - 2/20/02

ClimateMaster works continually to improve its products. As a result, the design and specifications of each product at the time of order may be changed without notice and may not be as described herein. Please contact ClimateMaster's Customer Service Department at 1-405-745-6000 for specific information on the current design and specifications. Statements and other information contained herein are not express warranties and do not form the basis of any bargain between the parties, but are merely ClimateMaster's opinion or commendation of its products. The latest version of this document is available at www.climatemaster.com.

GSW Series 50Hz - R407c Submittal Data Eng/SI

CLIMATEMASTER®

Contractor:	*P.O.:*
Engineer:	
Project Name:	*Unit Tag:*

GSW120 WIRING DIAGRAM
380-420/50/3 CXM CE
COMMERCIAL CLASS

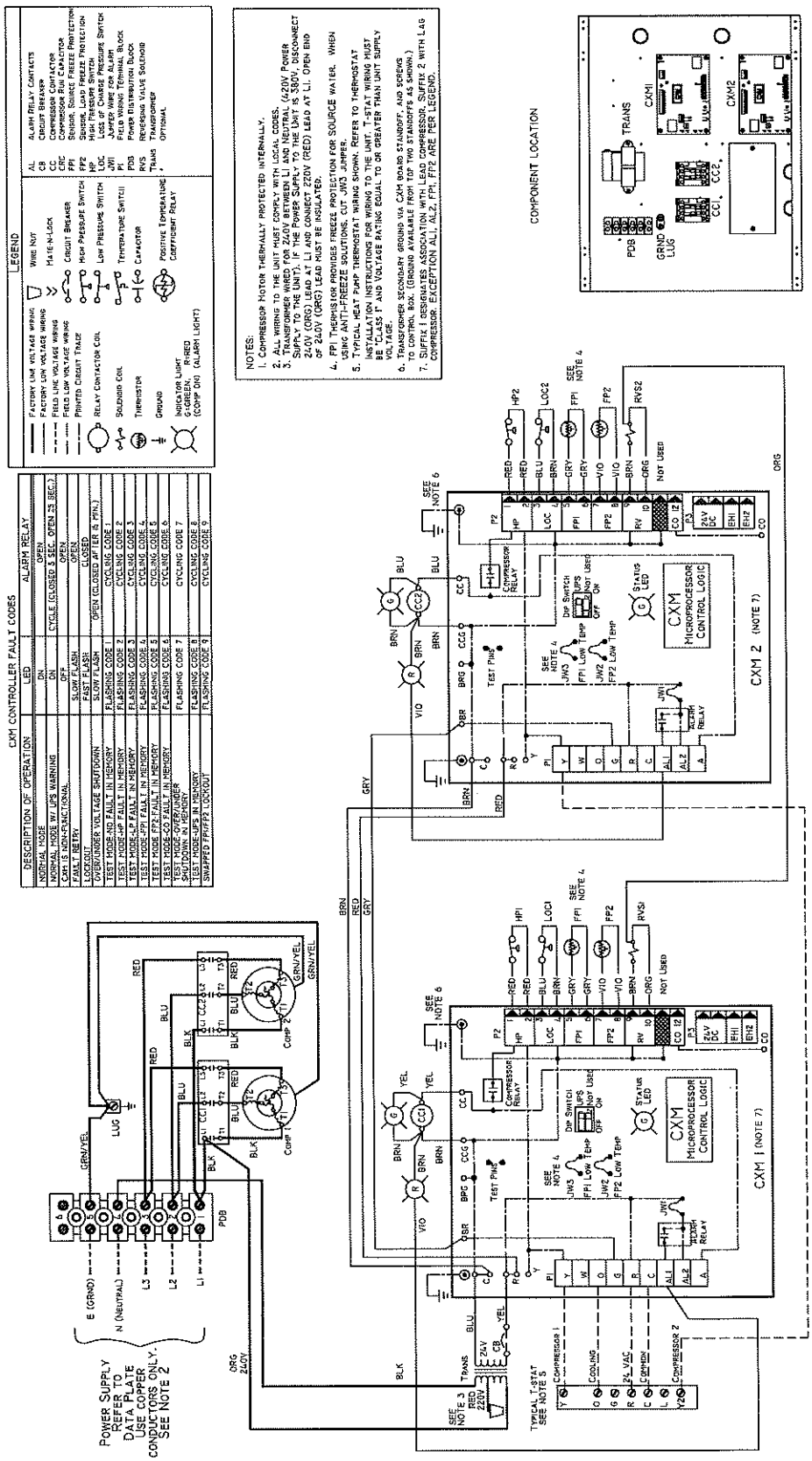

ClimateMaster works continually to improve its products. As a result, the design and specifications of each product at the time of order may be changed without notice and may not be as described herein. Please contact ClimateMaster's Customer Service Department at 1-405-745-6000 for specific information on the current design and specifications. Statements and other information contained herein are not express warranties and do not form the basis of any bargain between the parties, but are merely ClimateMaster's opinion or commendation of its products. The latest version of this document is available at www.climatemaster.com.

GSW Series 50Hz - R407c Submittal Data Eng/SI

CLIMATEMASTER®

Contractor:	*P.O.:*
Engineer:	
Project Name:	*Unit Tag:*

GSW120 WIRING DIAGRAM
380-420/50/3 DXM CE
COMMERCIAL CLASS

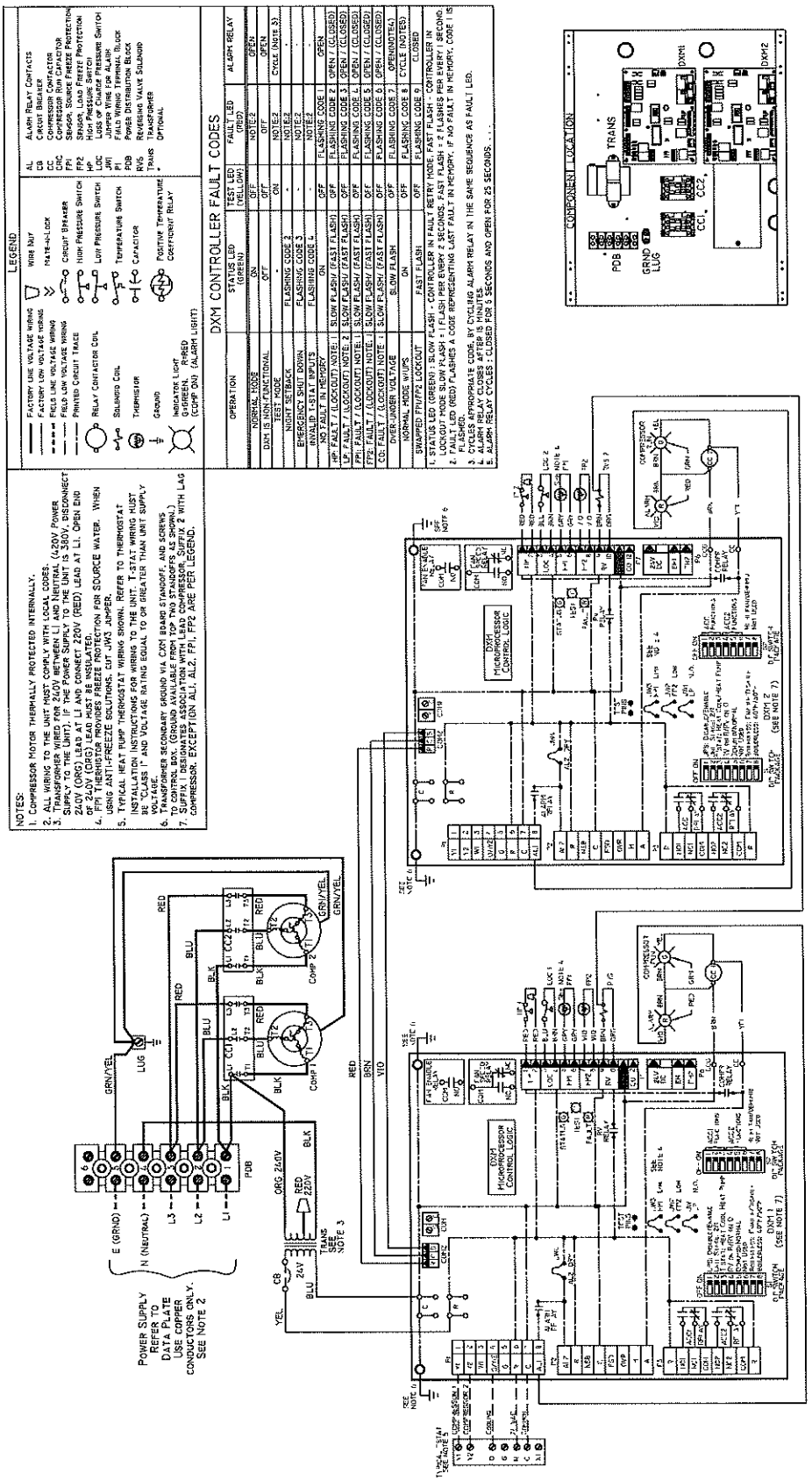

ClimateMaster works continually to improve its products. As a result, the design and specifications of each product at the time of order may be changed without notice and may not be as described herein. Please contact ClimateMaster's Customer Service Department at 1-405-745-6000 for specific information on the current design and specifications. Statements and other information contained herein are not express warranties and do not form the basis of any bargain between the parties, but are merely ClimateMaster's opinion or commendation of its products. The latest version of this document is available at www.climatemaster.com.

GSW Series 50Hz - R407c Submittal Data Eng/SI

CLIMATEMASTER®

Contractor:	*P.O.:*
Engineer:	
Project Name:	*Unit Tag:*

GENESIS SERIES
GSW - WATER TO WATER
50 HZ ENGINEERING GUIDE
SPECIFICATIONS

Revision: 03/13/02 B

General
Furnish and install ClimateMaster Water Source Heat Pumps, as indicated on the plans. Equipment shall be completely assembled, piped and internally wired. Capacities and characteristics as listed in the schedule and the specifications that follow.

Water to Water Source Heat Pumps:
Units shall be supplied completely factory built and capable of operation with an entering water temperature range from -6.6° to 43.3°C (20° to 110°F) as standard. Equivalent units from other manufacturers can be proposed provided approval to bid is given 10 days prior to bid closing. All equipment listed in this section must be rated and certified in accordance with ARI/ISO/ASHRAE or CSA/NRTL. The units shall have ARI/ISO, or CSA/NRTL labels. Optionally the units shall be CE certified and labeled if requested. All units shall be factory run tested under normal operating conditions at nominal water flow rates. This testing shall generate a report card to be shipped with each unit stating performance in both heating and cooling modes. Serial numbers will be recorded by factory and furnished to contractor for ease of unit warranty status. Units tested without water flow ARE NOT acceptable.

Basic Construction
All units must have a minimum of three access panels for serviceability of compressor compartment. If other arrangements make servicing difficult, the contractor must provide access panels and clear routes to ease service. Architect must approve any changes in layout.

The water to water heat pumps shall be fabricated from heavy gauge galvanized sheet metal. All interior surfaces shall be lined with 12 mm (1/2 inch) thick, 24 kg/m3 (1-1/2 lb/ft3) density acoustic type glass fiber insulation. All insulation must meet NFPA 90A.

Option: *Mute package shall consist of sound attenuating materials that are strategically applied to the cabinet, and will consist of 25 mm (1") fiberglass insulation that is specifically selected to focus on Noise Reduction at the lower 125 and 250 Hz frequencies. All surfaces that normally have 12 mm (0.5") insulation would be substituted the noise dampening 25 mm (1") insulation.*

Cabinets shall have separate openings and knockouts for entrance of line voltage and low voltage control wiring. Supply and return water connections for both load and source shall be copper FPT fittings (swivel on distributor class units). All water connections and electrical knockouts must be in the compressor compartment corner post as to not interfere with the serviceability of unit. All water connections shall be secured to the cabinet eliminating the need for back-up wrenches during installation. Contractor shall be responsible for any extra costs involved in the installation of units that do not have this feature. Contractor must ensure that units can be easily removed for servicing and coordinate locations of electrical conduit and lights with the electrical contractor. Extended Operation shall include closed cell insulation on the water circuit piping, water to refrigerant heat exchanger and all refrigerant suction piping for applications with inlet water temperatures below 12.8°C (55°F).

Refrigerant Circuit
Units shall have a sealed refrigerant circuit (2 circuits in GSW120) including a high efficiency scroll compressor (2 scrolls in GSW120) designed for heat pump operation, a thermostatic expansion valve for refrigerant metering, a reversing valve, two coaxial (tube in tube) refrigerant to water heat exchanger, and safety controls including a high pressure switch, a low pressure sensor, and a low water temperature sensor. Access fittings shall be factory installed on each high and low pressure refrigerant lines to facilitate field service. Activation of any safety device shall prevent compressor operation via a lockout device. The lockout shall be reset at the contractor supplied disconnect switch.

The compressor will be mounted on external computer selected isolating springs. Compressor shall have thermal overload protection. Refrigerant to water heat exchangers shall be of copper inner water tube and steel refrigerant outer tube design, rated to withstand 3108 kPa (450 PSIG) working refrigerant pressure and 3108 kPa (450 PSIG) working water pressure. Plate heat exchangers ARE NOT acceptable.

Option: *The source/outdoor coaxial water to refrigerant heat exchanger shall optionally be of cupro-nickel construction.*

Option: *The load/indoor coaxial water to refrigerant heat exchanger shall optionally be of cupro-nickel or of double-walled, vented copper construction.*

Reversing valves shall be four-way solenoid activated refrigerant valves which shall fail to heating operation should the solenoid fail to function.
The refrigerant suction piping shall be insulated with closed-cell to prevent condensation at low evaporating conditions.

Electrical
A control box shall be located within the unit compressor compartment and shall contain a 50VA transformer (75VA GSW036-060 Distributor Class and GSW120), 24 Volt activated, 2 or 3 pole compressor contactor,(power block - GSW120 only) terminal block for thermostat wiring and solid-state controller for complete unit operation. Loop pump and HWG controls shall be provided on Distributor Class equipment. Electro-mechanical operation WILL NOT be accepted. Units shall be name-plated for use with time delay fuses or HACR circuit breakers. Unit controls shall be 24 Volt and provide heating or cooling as required by the remote thermostat/sensor.

Option: *CE Mark Construction: To include power connection block, compressor grounding, fully insulated terminals, and CE listed electrical components.*

ClimateMaster works continually to improve its products. As a result, the design and specifications of each product at the time of order may be changed without notice and may not be as described herein. Please contact ClimateMaster's Customer Service Department at 1-405-745-6000 for specific information on the current design and specifications. Statements and other information contained herein are not express warranties and do not form the basis of any bargain between the parties, but are merely ClimateMaster's opinion or commendation of its products. The latest version of this document is available at www.climatemaster.com.

CLIMATEMASTER®

Contractor:	*P.O.:*
Engineer:	
Project Name:	*Unit Tag:*

GENESIS SERIES
GSW - WATER TO WATER
50 HZ ENGINEERING GUIDE
SPECIFICATIONS (cont.)

Revision: 03/13/02 B

Solid-State Control System
The Units shall have external cabinet mounted:
-Compressor "ON" LED to indicate compressor or unit operation
-Unit fault LED to indicate fault modes.

Units shall employ a solid-state control systems (CXM). The GSW120 employs two. The control shall interface with a (Y,O) thermostat, mechanical or electronic. The control system microprocessor board shall be specifically designed to protect against building electrical system noise contamination, EMI, and RFI interference. The control system shall have the following features:

a. Anti-short cycle time delay on compressor operation, time delay shall be 5 minutes minimum.
b. Random start on power up mode.
c. Low voltage protection.
d High voltage protection.
e. Unit shutdown on high or low refrigerant pressures.
f. Unit shutdown on low water temperature.
g. Source or Load Water coil low temperature cutout (selectable for water or anti-freeze).
h. Option to reset unit at thermostat or disconnect. Fault type shall be retained in memory if reset at thermostat.
i. Automatic intelligent reset. Unit shall automatically reset 5 minutes after trip if the fault has cleared. Should a fault re-occur 3 times sequentially then permanent lockout will occur.
j. Ability to defeat time delays for servicing.
k. Light emitting diodes (LED) to indicate high pressure, low pressure, low voltage, high voltage, low water temperature cut-out, condensate overflow and control status.
l. The low pressure switch SHALL NOT be monitored for the first 120 seconds after a compressor start command to prevent nuisance safety trips.
m. Remote fault type indication at thermostat.
n. Selectable 24V or pilot duty dry contact alarm output.
o. 24V output to cycle a motorized water valve with compressor contactor.

Option: *Enhanced control features (DXM) Control shall have all the features of the CXM control with the following additional features:*

a. A removable thermostat connector.
b. Random start on return from night setback.
c. Minimized reversing valve operation for extended life and quiet operation.
d. Night setback control from low temperature thermostat, with 2-hour override initiated by a momentary signal from the thermostat.
e. Dry contact night setback output for digital night setback thermostats.
f. Ability to work with heat/cool (Y, W) thermostats.
g. Ability to work with heat pump thermostats using O or B reversing valve control.
h. Single grounded wire to initiate night setback, or emergency shutdown.
i. Control board shall allow up to 3 units to be operated from one thermostat without any auxiliary controls.
j. A relay to restart a central pump or control a 24V motorized water valve.

Option: *LonWorks Control System*
Units shall have all the features listed above and the control board will be supplied with a LonWorks interface board. This will permit all units to be daisy chain connected by a 2-wire twisted pair shielded cable. The following points must be available at a central or remote computer location:

a. space temperature.
b. source leaving water temperature.
c. load leaving water temperature.
d. command of temperature setpoint.
e. cooling status.
f. heating status.
g. unoccupied/occupied command.
h. compressor shutdown (load shedding) command.
i. emergency shutdown command.
j. cooling command.
k. heating command.

Field Installed Options

Hose Kits
All units shall be connected with hoses. The hoses shall be 0.62m (2 feet) long, braided stainless steel; fire rated hoses complete with adapters. Only fire rated hoses will be accepted.

ClimateMaster works continually to improve its products. As a result, the design and specifications of each product at the time of order may be changed without notice and may not be as described herein. Please contact ClimateMaster's Customer Service Department at 1-405-745-6000 for specific information on the current design and specifications. Statements and other information contained herein are not express warranties and do not form the basis of any bargain between the parties, but are merely ClimateMaster's opinion or commendation of its products. The latest version of this document is available at www.climatemaster.com.