Lettered Model Numbers

A model number starting with two or three letters followed by the size of the unit has been used extensively and is current nomenclature policy.

The first two letters designate the model series. The third letter is normally used for the unit configuration: vertical upflow (V), horizontal (H), and down discharge (D).

The next three digits (sometimes only two) after model series is the unit cooling capacity in thousands of BTUH. 036 is 36,000 BTUH. A ton is 12,000 BTUH, some the 036 is a three-ton unit.

After the first 5 or 6 digits, the function of the digit has varied over time.

The current standard (for most package units) is: 7- revision letter, 8- voltage, 9- control system, 10 – cabinet insulation and filter rack, 11 – water options or belt drive selection, 12- heat exchanger options, 13 & 14- Airflow options, and 15- is for standard or special order. Some variance exists by type of unit.

The G# series units were the current models until 2010, when units were required to change from R-22 to R-410A. The TC, TR, TS are almost identical to the GC, GR, and TS units. Revision number (digit 7) may have changed, and some options have changed. Often, changing the first and sometime the seventh digits is all that is required to get the current equivalent unit.

Please note that the letter H as the first digit, represents two possibilities. The unit can be a typical Climatemaster model number or it can designate it has been re-branded for the Heat Controller company to sell.

For some time in our earlier history we made PTAC's (packaged terminal air conditioners) which were through the wall units and air cooled. We no longer make any PTAC units and refer customers to others.

We made PTAC's with both letter model numbers and numbered model numbers (700 series).

The left most added text box (in red) indicates first the equipment general type such as horizontal package or water to water units. The second box (if included) indicates suggested replacement in current Climatemaster model numbers.

NRA means no replacement available.

CLASS CODE: Z71

SPLIT SYSTEM AHU | TAH

1	2	3	4	5	6	7	8	9	10	11	12	13	14	15
A	E	0	3	6	G	S	S	S	S	S	P	S	S	A
SERIES	APPLICATION	SIZE (CAPACITY)			POWER SUPPLY	AGENCY	CONTROL		AIRFLOW/FILTER RACK		CABINET	RETURN CONNECTIONS	STANDARD\SPECIAL	REVISION CODE

BLOWER SECTION

E = EXTENDED RANGE HEAT PUMP

019–E,G
024–E,G
030–G,J
036–E,G,J
042–G,J
048–G,J,K
060–G,J,K
①

E = 265V/1PH/60Hz
G = 208V,230V/1PH/60Hz ③
J = 460V/1PH/60Hz
K = 575V/1PH/60Hz ①
L = 380V/1PH/50Hz
V = 220V,240V/1PH/50Hz ④

C = CSA ONLY
N = NON UL/NON CSA
S = UL/CSA

② SS = STANDARD
AD = HLCS

RETURN/DISCHARGE:
SS = SIDE/SIDE
ST = SIDE/TOP

D = DISTRIBUTOR (PAINTED)
COMMERCIAL UNITS:
G = GALVANIZED
P = PAINTED

S = SWEAT

S = STANDARD
A,B,C,...(EXCEPT S) = SPECIAL

A = CURRENT REVISION

NOTES:
1. CSA ONLY.
2. USE "AD" FOR ME UNITS W/"ZM" OR "ZS" CONTROLS.
3. DISTRIBUTOR UNITS ARE WIRED FOR 230V POWER.
   COMMERCIAL UNITS ARE WIRED FOR 208V POWER.
4. NON UL/CSA.

REV	DESCRIPTION	BY	PCN	DATE	APPROVED
E	CHANGED NOTE 2	JFK	U10627	11/09/95	Bill
D	DELETED POWER SUPPLY OPTION U; ADDED POWER SUPPLY OPTION L	RSS	U10293	3/28/95	BM
C	ADDED CLASS CODE, & U & V TO DIGIT 6 & REVISED DIGIT 12	TW	U10194	2-1-95	BM
B	E,G,S,-030; E,G,J-036 WAS E,G,J-036 CHANGED NOTE SYMBOLS TO NUMBERS; G,J-030 WAS	JMT	U9360	9/8/93	JN
A	REMOVED UNIT SIZE 015,072,096,& 120 FROM DECODER.	KB	U8881	10/23/92	JN

UNLESS SPECIFIED OTHERWISE DIMENSIONS ARE IN INCHES TOLERANCES ON DECIMALS = ±.031 ANGLES = ±1°

MATERIAL:

ClimateMaster 2300 SW 44th OKLA. CITY, OH 73119

TITLE: BLOWER SECTION DECODING
EXTENDED RANGE LOW TEMPERATURE
25°F – 110°F

DRAWN: AP	DATE: 12/12/91	DRAWING NO: 69169104	
ENG: JN	DATE: 5/6/92	C.A.D. NO: 69169104	
ISSUED: U8517	DATE: 5/5/92	SCALE: .800	A SHEET 1

CCE Series 60Hz - R22 Submittal Data Eng/I-P

CLIMATEMASTER®

Console TRC

CCE Series Nomenclature

1 2 3	4 5	6	7	8	9	10	11	12	13	14	15
C C E	0 7	B	G	C	A	S	S	C	S	R	S

Model Type
CCE = Console

Unit Size
07
09
12
15
19

Revision Level
B = Current Revision

Voltage
A = 115/60/1
E = 265/60/1
G = 208-230/60/1

Controls
Digital Display Controls
A = MCO Unit Mounted Tstat w/CXM
B = MCO Unit Mounted Tstat w/DXM
C = ACO Unit Mounted Tstat w/CXM
D = ACO Unit Mounted Tstat w/DXM
R = Remote Mounted Tstat w/CXM
S = Remote Mounted Tstat w/DXM
L = Remote Mounted w/CXM & LON
M = Remote Mounted w/DXM & LON
N = Remote Mounted w/CXM & MPC
P = Remote Mounted w/DXM & MPC

Power Termination
A = Field Connected (Hard Wire)
B = 20Amp Plug & Cord
D = Disconnect Switch & 15Amp Fuse
F = Disconnect Switch (Non Fused)
H = 20Amp Plug, Cord, Receptacle, Disconnect Switch & 15Amp Fuse
K = 20Amp Plug, Cord, Receptacle & Disconnect Switch (Non Fused)

Cabinet Insulation
S = Bottom Return
M = Bottom Return w/UltraQuiet
L = Bottom Return w/Locking Control Door
D = Bottom Return w/Locking Control Door & UltraQuiet
F = Front Return
B = Front Return w/UltraQuiet
G = Front Return w/Locking Control Door
E = Front Return w/Locking Control Door & UltraQuiet
N = No Cabinet Chassis Only
C = No Cabinet Chassis Only w/UltraQuiet

Subbase
S = 3" Subbase
D = 3" Subbase w/Motorized Damper
G = 5" Subbase
H = 5" Subbase w/Motorized Damper
N = None

Heat Exchanger Options
A = Copper Water Coil w/E-Coated Air Coil
C = Copper Water Coil
J = Cupro-Nickel Water Coil w/E-Coated Air Coil
N = Cupro-Nickel Water Coil
V = Copper Water Coil w/E-Coated Air Coil & Extended Range Insulation
E = Copper Water Coil w/Extended Range Insulation
M = Cupro-nickel Water Coil w/E-Coated Air Coil & Extended Range Insulation
F = Cupro-nickel Water Coil w/Extended Range Insulation

Water Circuit Options

Water Circuit Options	Sweat	IPT	EPT
None	S	F	M
Motorized Water Valve	A	G	N
Autoflow (2.25 Gpm/Ton)	B	H	P
Autoflow (3.0 Gpm/Ton)	C	J	Q
Motorized Water Valve & Air (2.25)	D	K	R
Motorized Water Valve & Air (3.0)	E	L	T
Secondary Circulation Pump	U	V	W

Piping Connections
R = Right Piping
L = Left Piping

Standard
S = Standard

Rev.: 06/01/06D

ClimateMaster works continually to improve its products. As a result, the design and specifications of each product at the time of order may be changed without notice and may not be as described herein. Please contact ClimateMaster's Customer Service Department at 1-405-745-6000 for specific information on the current design and specifications. Statements and other information contained herein are not express warranties and do not form the basis of any bargain between the parties, but are merely ClimateMaster's opinion or commendation of its products. The latest version of this document is available at www.climatemaster.com.

CLASS CODE: Z39

Classroom Console | NRA

1	2	3	4	5	6	7	8	9	10	11	12	13	14	15
C	C	L	3	6	F	S	S	S	S	S	C	C	S	B
SERIES			SIZE (CAPACITY)		POWER SUPPLY	AGENCY	CONTROL	DAMPER	FILTER TYPE	CABINET	APPLICATION	CONDENSER	STANDARD\SPECIAL	REVISION CODE

CLASSROOM CONSOLE HEAT PUMP (0–25% OUTDOOR AIR)

24
30
36
42

E = 265V/1PH/60Hz ②
F = 460V/3PH/60Hz
G = 208V,230V/1PH/60Hz
H = 208V,230V/3PH/60Hz ④

S = UL/ULC
N = NON UL/NON ULC

A = UNIT MOUNTED ACO TSTAT (ETJ01HABMFNACFA)
M = UNIT MOUNTED MCO TSTAT (ETK01HABMFNACFA)
R = REMOTE TSTAT ③
X = SPECIAL

L = LOW LEAKAGE OUTSIDE AIR DAMPER
N = NO OUTSIDE AIR DAMPER
S = STANDARD OUTSIDE AIR DAMPER
X = SPECIAL

S = 1" THROW-AWAY FIBERGLASS
C = 1" CLEANABLE ALUMINUM

S = STANDARD (UNIT MOUNTED CONTROLS)
K = KEY LOCKED CONTROL DOOR
T = TAMPER RESISTANT CONTROL DOOR
① N = NO CONTROL DOOR (REMOTE TSTAT)

NOTE: FRONT PANELS ALWAYS HAVE TAMPER-RESISTANT HARDWARE

C = COMMERCIAL (33.5°F FREEZESTAT)
B = COMMERCIAL (21°F FREEZESTAT)

C = COPPER
N = CUPRO-NICKEL
D = COPPER, UNIT PUMP, PETE'S PORTS, PURGE VALVES (SHIPPED LOOSE)
P = CUPRO-NICKEL, UNIT PUMP, PETE'S PORTS, PURGE VALVES (SHIPPED LOOSE)

S = STANDARD
A,B,C,...(EXCEPT S) = SPECIAL

A = OBSOLETE
B = CURRENT REVISION (02/19/94)

NOTES:
① 1. DIGIT #8 MUST BE "R".
② 2. NOT AVAILABLE IN SIZES 30 & 42.
③ 3. REMOTE THERMOSTAT MUST BE CLIMATEMASTER "ET" THERMOSTAT.
④ NOT AVAILABLE IN SIZE 30.

REV	DESCRIPTION	BY	PCN	DATE	APPROVED
E	ADDED NOTE 4	SAM	97-0175	7/2/97	BC
D	ADDED NOTE TO CABINET OPTIONS	RSS	U10475	7/25/95	BM
C	REFER TO REVISION B	DR	U10254	03/02/95	BM
B	DIGIT 8 0 A = ETJ01HABMFNACFA was ETJ01HABMFCACFA DIGIT 8 0 M = ETK01HABMFNACFA was ETK01HABMFCACFA	DR	U10243	02/28/95	BM
A	COMPLETELY REVAMPED & UPDATED	ML	U10194	2-1-95	BM

UNLESS SPECIFIED OTHERWISE DIMENSIONS ARE IN INCHES TOLERANCES ON DECIMALS = ±.XXX ANGLES = ±1°

MATERIAL:

ClimateMaster 7300 SW 44th OKLA. CITY, OK 73179

TITLE: DECODER
CLASSROOM CONSOLE HEAT PUMP

DRAWN: ML	DATE: 2-23-94	DRAWING NO: 69550701	
ENG: JT	DATE: 9-24-94	C.A.D. NO: 69550701	
ISSUED: U9388	DATE: 9/24/94	SCALE: .800	A SHEET 1

CLASS CODE: Z79

Dehumidification Unit

NRA

69840801

JUN 4 1997

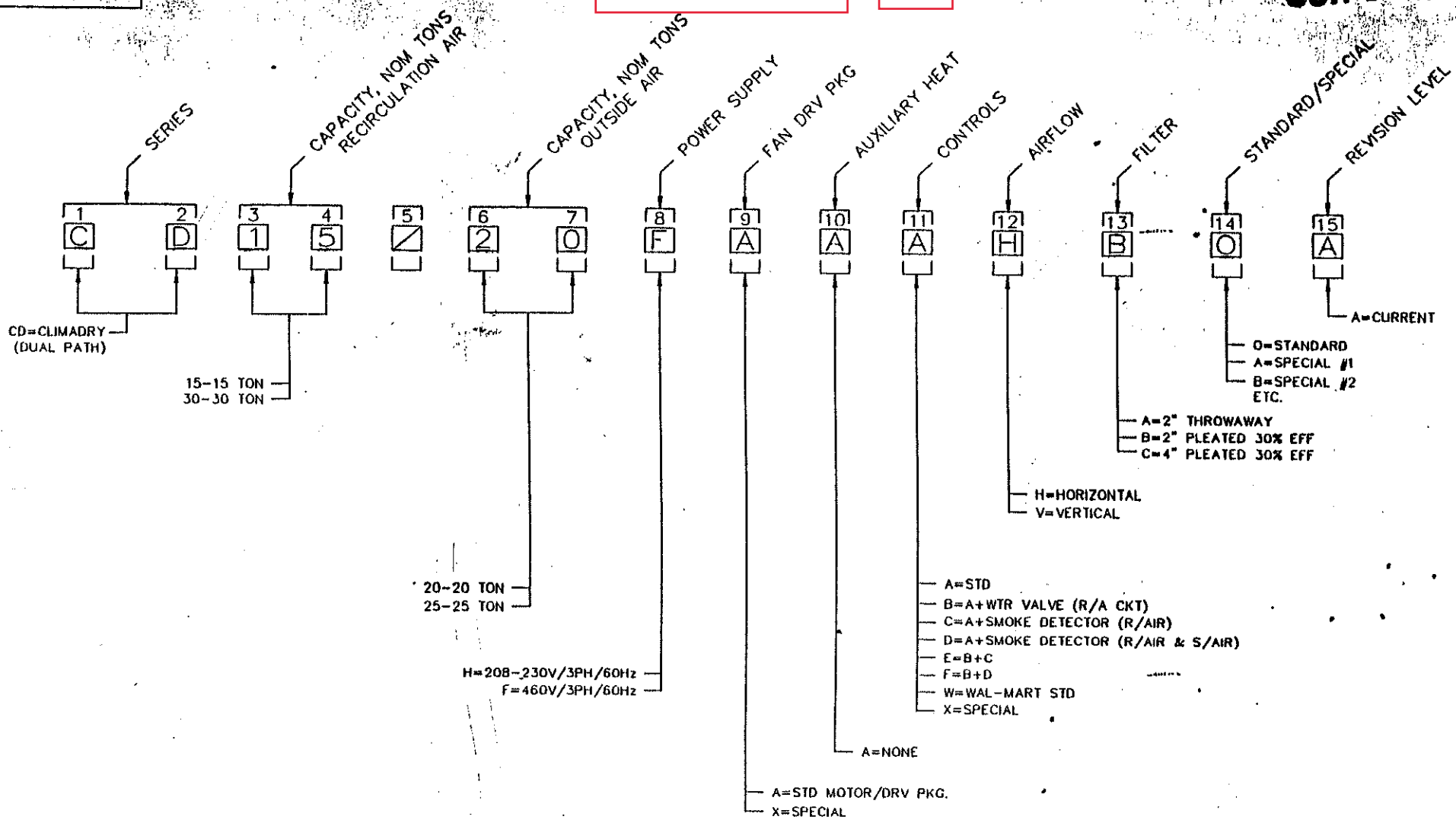

EXAMPLE:
CD15/20FAAAHBOA

REV	DESCRIPTION	BY	PCN	DATE	APPROVED
B	CONTROLS REVISED TO CURRENT STATUS	TN	97-0110	05/20/97	
A	CLASS CODE WAS Z40	TN	U11392	12/27/96	

MATERIAL: N/A

CLIMATEMASTER 7300 SW 44th OK CITY, OK 73179

TITLE: DECODER CD SERIES

DRAWN: TN DATE: 11/19/96 DRAWING NO: 69840801

CHK: NERU DATE: CAD NO: 69840801

ISSUED: U11324 DATE: 11/19/96 SCALE: 800 A SHEET 1

TCH, V

CALIFORNIA HEAT PUMP COMPANY
MODEL NUMBERING SYSTEM

For Use When Specifying or Ordering California Heat Pump Units

EXAMPLE:

CAPACITY - 42000 BTUH
TYPE - vertical, right return air intake position
ELECTRICAL - 208/230 Volts, 60 Hertz, 3 phase
CONDENSER - cupro-nickel
CONTROL - 24 volts for remote thermostat

MODEL NUMBER:

C H P - 4 2 V R - 3 2 - N 7

PREFIX

California Heat Pump

Often CHP is left off and model number starts as 42VR.....

CONTROL ARRANGEMENT

1 = Unit mounted manual changeover, standard
2 = Unit mounted manual changeover, with night set-back
3 = Unit mounted manual changeover, with random start
4 = Unit mounted auto changeover, standard
5 = Unit mounted auto changeover, with night set-back
6 = Unit mounted auto changeover, with random start
7 = 24 Volt controls for remote thermostat, standard
8 = 24 Volt controls for remote thermostat, with night set-back
9 = 24 Volt controls for remote thermostat, with random start
0 = 24 Volt controls, unit mounted thermostat
S = Other special controls

APPROX. COOLING CAPACITY x 1000

Consoles	Verticals & Horizontals	Hi-Rise
07	13	10
09	22	15
12	26	20
16	33	28
19	42	30
	53	36
	61	

CONDENSER MATERIAL

C - Copper Condenser (Standard)
N - Cupro-Nickel Condenser (Optional)

TYPE OF UNIT

CR- Console, Right Hand Piping (Standard)
CL- Console, Left Hand Piping (Optional)
VL- Vertical, Left Return Air (Standard)
VR- Vertical, Right Return Air (Optional)
HF- Horizontal, Front Return Air (Standard)
HR- Horizontal, Rear Return Air (Optional)
RX- Exposed Hi-Rise
RF- Furred-in Hi-Rise
RD- Double Hi-Rise, Furred-in

VOLTAGE

1 = 115
2 = 208/230
3 = 265
4 = 460

PHASE

1 = Single
3 = Three

NOTE: Not all options are available with all models.

CALIFORNIA HEAT PUMP COMPANY
MODEL NUMBERING SYSTEM

For Use When Specifying or Ordering California Heat Pump Units

EXAMPLE:

CAPACITY: 42,000 BTUH
TYPE: vertical, right return air intake position
ELECTRICAL: 208/230 volts, 60 hertz, 3 phase
WATER COIL: cupro-nickel
CONTROL: 24 volts for remote thermostat

MODEL NUMBER:

4 2 V R 3 2 - N 7

PRODUCT OPTIONS (One or more letters)

CONTROL ARRANGEMENT

1 = Unit mounted manual changeover, standard
2 = Unit mounted manual changeover, with night set-back
3 = Unit mounted manual changeover, with random start
4 = Unit mounted auto changeover, standard
5 = Unit mounted auto changeover, with night set-back
6 = Unit mounted auto changeover, with random start
7 = 24 volt controls for remote thermostat, standard
8 = 24 volt controls for remote thermostat, with night set-back
9 = 24 volt controls for remote thermostat, with random start
0 = 24 volt controls, unit mounted thermostat
S = Other special controls
X = " " " (Hi-Rise)
Y = No Controls

APPROX. COOLING CAPACITY x 1000

Consoles	Horiz.	Vert.	Hi-Rise
07	9		10
09	12	13	15
12	22	22	20
16	26	26	28
19	33	33	30
	42	42	36
	52	52	
	61	61	

WATER COIL

C - Copper (Standard)
N - 90/10 Cupro-Nickel (Optional)

SR Console without cabinet
SL

TYPE OF UNIT

CR - Console, Right Hand Piping (Standard)
CL - Console, Left Hand Piping (Optional)
VL - Vertical, Left Return Air (Standard)
VR - Vertical, Right Return Air (Optional)
HF - Horizontal, Front Return Air*
HR - Horizontal, Rear or Right Return Air*
RE — RX - Exposed Hi-Rise
RF - Furred-In Hi-Rise
RD - Double Hi-Rise, Furred-In
RY - No Cabinet

VOLTAGE

1 = 115
2 = 208/230
3 = 265
4 = 460

PHASE

1 = Single
3 = Three

NOTE: Not all options are available with all models.

DESIGN MODIFICATION (See Spec. Shts.)
except Hi-Rise where electric heat is identified here.

*Front Return Air is standard for sizes 22, 26, 33 and 42 Horizontal units, with Rear Return optional. Size 09, 12, 52 and 61 Horizontal units are supplied with return air entering at the right end.

Pool Unit NRA

CPV/CPH
(CP SERIES)
PRODUCT DECODING

1	2	3	4	5	6	7	8	9	10	11	12	13	14	15
C	P	V	1	1	5	F	A	K	A	A	D	A	O	A
SERIES		ARRANGEMENT	SIZE			POWER SUPPLY	AIRFLOW/DISCHARGE	AUXILIARY HW HEAT	REF. HEAT SINKS	CONSTRUCTION	CONTROLS	FAN DRIVE	SPECIAL ORDER	REVISION CODE

CP SERIES

V = VERTICAL
H = HORIZONTAL

085
095
120
140

F = 460V-3PH
J = 208V-3PH
K = 230V-3PH

A = TOP DISCHARGE CCW ROTATION
B = TOP DISCHARGE CW ROTATION
C = STRAIGHT DISCHARGE CCW ROTATION
D = BOTTOM DISCHARGE CCW ROTATION (HORIZ ONLY)
E = BOTTOM DISCHARGE CW ROTATION (HORIZ ONLY)

NOTE: DISCHARGE/ROTATION AS VIEWED FROM CONTROL BOX SIDE.

G = NONE
A = HW COIL WITHOUT VALVE
B = HW COIL W/3-WAY MOD VALVE
*C = HW COIL W/3-WAY ON/OFF VALVE
D = HW COIL W/2-WAY ON/OFF VALVE
E = HW COIL + AUX POOL WATER HX - 3-WAY MOD VALVE
F = HW COIL + AUX POOL WATER HX - 2-WAY ON/OFF VALVE
X = SPECIAL

* ITEMS TO BE EXCLUDED FROM FIELD DISTRIBUTION.

O = NONE (NO COIL ONLY)
A = RC ONLY
B = PH ONLY (PARTIAL)
C = RC + PH (PARTIAL)
D = RC + PH (PARTIAL) + SPA (PARTIAL)
*E = PH ONLY (FULL COND)
*F = RC + PH (FULL COND)
*G = RC + PH (FULL COND + SPA (PARTIAL)
H = WC
J = WC + PH
K = WC + PH + SPA

CIRCUITS WILL HAVE IDENTICAL CONFIGURATION. USE "X" IF CONFIGURATION IS DIFFERENT FOR EACH CIRCUIT.
RC - REMOTE CONDENSER PIPING
PH - POOL WATER HEAT
WC - WATER COOLED CONDENSER

A = STANDARD MOTOR SIZE AND FAN DRIVE
X = SPECIAL

A = STANDARD (COMP START COOLING/DEHUM)
B = WIRING FOR EXTERNAL ECONOMIZER
C = WIRING FOR EXTERNAL MIXING BOX
X = SPECIAL
NOTE: ECONOMIZER & MIXING BOX TO BE ACCESSORIES ORDERED SEPARATELY.

A = STANDARD
B = WEATHER PROOFING (HORIZONTAL UNITS ONLY)
C = REF. GUAGES
D = SST DRAIN PAN
E = FRESH AIR VENT PACKAGE
F = ECONOMIZER (SHIPPED SEPARATELY)
G = WEATHER PROOFING - ECONOMIZER
X = SPECIAL

O = STANDARD
A,B,C... ENGINEERING ASSIGNED

A

REV	DESCRIPTION	BY	CHK	DATE	APPROVED
A	CLIMATE MASTERS TITLE BLOCK WAS FORMALLY APR	TN	U10917	4/22/95	

ClimateMaster 7300 SW 44th OKLA. CITY, OK 73179

TITLE: PRODUCT CODING SHEET CPV/CPH (CP SERIES)

DRAWN UK	DATE 3/3/96	DRAWING NO. 69564902	
ENG NERU	DATE 3/3/96	C.A.D. NO. 69564902	
ISSUED N/A	DATE 3/3/96	SCALE .100 V	SHEET 1

DWG NO: 69169127

CLASS CODES:
CC = Z62
CL = Z63
CS = Z64
CE = Z65

Console TRC

1	2	3	4	5	6	7	8	9	10	11	12	13	14	15
SERIES	APPLICATION	SIZE (CAPACITY)			POWER SUPPLY	SUPPLY SIDE	ELECTRIC HEAT	CONTROL	POWER TERMINATION	CABINET	BASE	PIPING CONNECTION (WATER COIL)	STANDARD\SPECIAL	REVISION CODE
C	S	0	1	2	G	R	O	A	A	S	S	O	S	A

SERIES:
- CONSOLE

APPLICATION:
- C = COOLING ONLY
- L = LOW TEMP (40°F – 110°F)
- S = STANDARD RANGE
- E = EXTENDED RANGE (11)(8)

SIZE (CAPACITY):
- 007
- 009
- 012
- 015
- 019

POWER SUPPLY:
- A = 115V/1PH/60Hz (2)(3)
- E = 265V/1PH/60Hz
- G = 208V–230V/1PH/60Hz
- V = 220V–240V/1PH/50Hz

SUPPLY SIDE:
- L = LEFT
- R = RIGHT

ELECTRIC HEAT:
- O = NO ELECTRIC HEAT

CONTROL:
- REFER TO SHEET 2 FOR OPTIONS

POWER TERMINATION:
- A = FIELD CONNECTED (HARD WIRE)
- B = 20A PLUG & CORD (6)
- C = 30A PLUG & CORD (6)
- D = DISCONNECT SWITCH & 15A FUSE
- ~~E = DISCONNECT SWITCH & 20A FUSE~~ (8)
- F = DISCONNECT SWITCH, NON-FUSED
- ~~G = DISCONNECT SWITCH & 30A FUSE~~ (8)
- H = 20A PLUG, CORD, RECEPTACLE, DISCONNECT SWITCH & 15A FUSE
- ~~J = 20A PLUG, CORD, RECEPTACLE, DISCONNECT SWITCH & 20A FUSE~~ (8)
- K = 20A PLUG, CORD, RECEPTACLE, DISCONNECT SWITCH, NON-FUSED

(E, G, & J NOT AVAILABLE)

CABINET:
- (4) F = SLOPE TOP, FRONT AIR INTAKE
- (4) G = SLOPE TOP, FRONT AIR INTAKE, LOCKING CONTROL DOOR
- (4)(9) H = SLOPE TOP, FRONT AIR INTAKE, NO CONTROL DOOR
- L = SLOPE TOP, BOTTOM AIR INTAKE, LOCKING CONTROL DOOR
- (9) N = SLOPE TOP, BOTTOM AIR INTAKE, NO CONTROL DOOR
- O = NONE (REPLACEMENT CHASSIS OR ARK USE)
- S = SLOPE TOP, BOTTOM AIR INTAKE
- X = SPECIAL

BASE:
- D = MOTORIZED DAMPER (3.000")
- H = 5.000" HIGH SUBBASE w/MOTORIZED DAMPER
- (5) O = NONE
- S = STANDARD (3.000")
- X = SPECIAL

PIPING CONNECTION (WATER COIL):
- F = FPT (CU)
- G = FPT (CN)
- H = MOTORIZED WATER VALVE (CU) SWEAT
- J = MOTORIZED WATER VALVE (CN) SWEAT
- M = MPT (CU)
- N = MPT (CN)
- O = NONE (CU) SWEAT
- T = NONE (CN) SWEAT
- X = SPECIAL

STANDARD\SPECIAL:
- S = STANDARD
- A,B,C,...(EXCEPT S) = SPECIAL

REVISION CODE:
- A = OBSOLETE
- B = OBSOLETE (5/22/96) COIL & COMP TUBING CHGS
- C = CURRENT (9/13/96) NEW TUBING ASSY'S
- W = CIAT (8)
- Y = EUROPEAN(OBSOLETE)
- (10) Z = EUROPEAN(CURRENT)(9/13/96)NEW TUBING ASSY'S

NOTES:
1. SIZE 012, 015 & 019 ONLY.
2. SIZE 007, 009 & 012 ONLY.
3. DIGIT #8 MUST BE "O".
4. DIGIT #12 MUST BE "O".
5. DIGIT #11 MUST BE "F" or "O".
6. NOT AVAILABLE IN 265V.
7. ALL SPECIALS "X" ARE NON-UL, NON-CUL LISTED (EXCEPT BY SPECIAL ORDER).
8. NOT AVAILABLE AT THIS TIME.
9. DIGIT #9 MUST BE "6" or "8".
10. AVAILABLE IN "1","2" & "3" CONTROLS. (CE MARKED UNITS ONLY)
11. DO NOT SELL–ENGINEERING WAITING ON TEST DATA.

REV	DESCRIPTION	BY	PCN	DATE	APPROVED
N	REMOVED NOTE B FROM "N" PIPING CONNECTION	JK	98-0109	4/1/98	BC
M	REDEFINED DISCRIPTIONS FOR REV CODES; ADDED "SWEAT" TO PIPING CONNECTION; CHGD NOTE 10	JK	97-0480	12/15/97	BC
L	ADDED DECRIPTIONS FOR OBSOLETE REV CODES	JMC	97-0373	11/07/97	BC
K	ADDED REFERENCE TO NOTE #10	JK	97-0274	08/25/97	BC
J	ADDED REV C AS CURRENT; OBSOLETED REV B; & Y; ADDED NOTE 11; ADDED REV Z AS CURRENT EUROPEAN UNIT	RSS	U11220	09/13/96	AK
H	ADDED APPLICATION E; ADDED REV B; OBSOLETED REV A	RSS	U10881	05/22/96	AK

UNLESS SPECIFIED OTHERWISE DIMENSIONS ARE IN INCHES TOLERANCES ON DECIMALS = ±.031 ANGLES = ±1°

MATERIAL:

ClimateMaster 7300 SW 44th OKLA CITY, OK 73179

TITLE: DECODER CONSOLE

DRAWN: KB DATE: 6/8/93 DRAWING NO: 69169127
ENG: JT DATE: 6/14/93 C.A.D. NO: 69169127
ISSUED: U9124 DATE: 6/8/93 SCALE: .800 A SHEET 1

DRAWING NO: 99D0002N14

CLASS CODES:
CL = Z63
CS = Z64

Console

1	2	3	4	5	6	7	8	9	10	11	12	13	14	15
SERIES	APPLICATION	SIZE (CAPACITY)			POWER SUPPLY	SUPPLY SIDE	ELECTRIC HEAT	CONTROL	POWER TERMINATION	CABINET	BASE	PIPING CONNECTION (WATER COIL)	STANDARD\SPECIAL	REVISION CODE
C	S	0	1	2	G	R	0	A	A	S	S	O	S	D

SERIES: C = CONSOLE

APPLICATION:
- L = LOW TEMP (40°F – 110°F)
- S = STANDARD RANGE

SIZE (CAPACITY):
- 007
- 009
- 012
- 015
- 019

POWER SUPPLY:
- A = 115V/1PH/60Hz ①
- E = 265V/1PH/60Hz
- G = 208V–230V/1PH/60Hz
- V = 220V–240V/1PH/50Hz

SUPPLY SIDE:
- L = LEFT
- R = RIGHT

ELECTRIC HEAT:
- 0 NO ELECTRIC HEAT

CONTROL:

⑥	CONTROL OPTIONS	AGENCY APPROVAL
A	MCO W/CXM	CSA/NRTL FOR USA & CANADA
B	MCO W/DXM	
C	ACO W/CXM	
D	ACO W/DXM	
R	REM TSTAT W/CXM	
S	REM TSTAT W/DXM	
L	DDC LONWORKS W/CXM	
M	DDC LONWORKS W/DXM	
E	MCO W/CXM	CE FOR EUROPE
F	ACO W/CXM	
G	REM TSTAT W/DXM	
H	DDC LONWORKS W/CXM	

POWER TERMINATION:
- A = FIELD CONNECTED (HARD WIRE)
- B = 20A PLUG & CORD ④
- D = DISCONNECT SWITCH & 15A FUSE
- F = DISCONNECT SWITCH, NON–FUSED
- H = 20A PLUG, CORD. RECEPTACLE, DISCONNECT SWITCH & 15A FUSE
- K = 20A PLUG, CORD, RECEPTACLE, DISCONNECT SWITCH, NON–FUSED

CABINET:
- ② F = SLOPE TOP, FRONT AIR INTAKE
- ② G = SLOPE TOP, FRONT AIR INTAKE, LOCKING CONTROL DOOR
- L = SLOPE TOP, BOTTOM AIR INTAKE, LOCKING CONTROL DOOR
- O = NONE (REPLACEMENT CHASSIS OR ARK USE)
- S = SLOPE TOP, BOTTOM AIR INTAKE
- X = SPECIAL

BASE:
- D = MOTORIZED DAMPER (3.000")
- H = 5.000" HIGH SUBBASE w/MOTORIZED DAMPER
- ③ O = NONE
- S = STANDARD (3.000")
- X = SPECIAL

PIPING CONNECTION (WATER COIL):
- F = FPT (CU)
- G = FPT (CN)
- H = MOTORIZED WATER VALVE (CU) SWEAT
- J = MOTORIZED WATER VALVE (CN) SWEAT
- M = MPT (CU)
- N = MPT (CN)
- O = NONE (CU) SWEAT
- T = NONE (CN) SWEAT
- X = SPECIAL

STANDARD\SPECIAL:
- S = STANDARD
- ⑤ A,B,C,...(EXCEPT S) = SPECIAL

REVISION CODE:
- A THROUGH C AND W,Y AND Z – OBSOLETE: SEE 69169127
- D = CURRENT (8/99) CXM/DXM CONTROLS, NEW TUBING

NOTES:

1. SIZE 007, 009 & 012 ONLY.
2. DIGIT #12 MUST BE "O".
3. DIGIT #11 MUST BE "F" "G" or "O".
4. NOT AVAILABLE IN 265V.
5. ALL SPECIALS "X" ARE NOT AGENCY, LISTED (EXCEPT BY SPECIAL ORDER).
6. CXM CONTROLLERS TAKE 50 VA TRANSFORMER. DXM CONTROLLERS TAKE 75 VA TRANSFORMER.

REV	DESCRIPTION	BY	PCN	DATE	APPROVED	REV	DESCRIPTION	BY	PCN	DATE	APPROVED
						X	X	XX			

UNLESS SPECIFIED OTHERWISE DIMENSIONS ARE IN INCHES. TOLERANCES ON:
DECIMALS ±.031
ANGLES ±1°-0'

MATERIAL:

CLIMATEMASTER • 7300 SW 44th OK CITY, OK 73179

TITLE: DECODER CONSOLE

DRAWN: SR	DATE: 8/5/99	DRAWING NO: 99D0002N14	
ENG: BB	DATE: 8/10/99	C.A.D. NO: 99D0002N14	
ISSUED: 99–0375	DATE: 1/20/99	SCALE: .800	A SHEET 1

CLASS CODE: Z71

DOWNFLOW | TSD, TED

1	2	3	4	5	6	7	8	9	10	11	12	13	14	15
SERIES	APPLICATION	SIZE (CAPACITY)			POWER SUPPLY	AGENCY	CONTROL		AIRFLOW/FILTER RACK		CABINET	CONDENSER	STANDARD/SPECIAL	REVISION CODE
D	E	0	3	6	G	S	S	S	1	6	P	C	S	A

DOWN FLOW

E = EXTENDED RANGE HEAT PUMP

019–E,G
024–E,G
030–F,G,H
036–E,F,G,H
042–F,G,H
048–F,G,H,N
060–F,G,H,N
① (048 and 060)

E = 265V/1PH/60Hz
F = 460V/3PH/60Hz
G = 208V,230V/1PH/60Hz
H = 208V,230V/3PH/60Hz
④ (G and H)
N = 575V/3PH/60Hz ①
U = 380V/3PH/50Hz
V = 220V,240V/1PH/50Hz
⑤ (U and V)

C = CSA ONLY
N = NON UL/NON CSA
S = UL/CSA

AD = HLCS
AN = RANDOM START
AP = PROGRAM RELAY 24V
AV = SERVICE SIGNAL TO TSTAT
SS = STANDARD CONTROLS
AG = ANTI–SHORT–CYCLE TIMER
③ (AD–AG)
ZM=VER 8.4 OR 8.8 CMC
ZS=VER 8.9 CMC

RETURN/DISCHARGE/FILTER RACK

26 = LEFT/DOWN/STD
46 = RIGHT/DOWN/STD
16 = FRONT/DOWN/STD
36 = BACK/DOWN/STD
12 = FRONT/LEFT/STD
13 = FRONT/BACK/STD
14 = FRONT/RIGHT/STD
21 = LEFT/FRONT/STD
23 = LEFT/BACK/STD
24 = LEFT/RIGHT/STD
31 = BACK/FRONT/STD
32 = BACK/LEFT/STD
34 = BACK/RIGHT/STD
41 = RIGHT/FRONT/STD
42 = RIGHT/LEFT/STD
43 = RIGHT/BACK/STD

C = COPPER
D = COPPER w/HWG
E = CuNi w/HWG
② (D and E)
N = CUPRO/NICKEL
P = COPPER w/WATER VALVE WIRING
Q = CuNi w/WATER VALVE WIRING

S = STANDARD
A,B,C,...(EXCEPT S) = SPECIAL

A = CURRENT REVISION (SIZE 036–060)
B = AWF COMPRESSOR

SIZE	VOLTAGE
019	E,G
024	E,G
030	F,G,H

D = DISTRIBUTOR (PAINTED) 21" FS		
COMMERCIAL UNITS	33.5" FS	21" FS
GALVANIZED	G	H
PAINTED	P	Q

NOTES:
1. CSA ONLY.
2. HWG AVAILABLE ON SIZES 019 THRU 060 ONLY, AND 230V UNITS ONLY (G & H).
3. DISTRIBUTOR UNITS COME STANDARD WITH ANTI–SHORT CYCLE TIMER AND SERVICE SIGNAL TO TSTAT. DIGITS 8,9="SS" FOR DIGIT 12="D".
4. DISTRIBUTOR UNITS ARE WIRED FOR 230V POWER. COMMERCIAL UNITS ARE WIRED FOR 208V POWER.
5. NON UL/CSA.

REV	DESCRIPTION	BY	PCN	DATE	APPROVED
G	ADDED 'B' REV CODE, REMOVED ITEM 'H' FROM SIZE 024	JMC	97-0430	11/24/97	[illegible]
F	CONTROL OPTION Z[illegible] AS VER 8.4 ONLY	RSS	U10736	1/11/96	BM
E	ADDED TO NOTE 3 D[illegible]9="SS" FOR DIGIT 12="D"	JFK	U10627	11/09/95	BM
	ADDED REV ZM AND ZS TO DIGIT 8,9				
D	ADDED U & V TO DIGIT 6;C TO DIGIT 7;REVISED DIGIT 12	TW	U10194	2-1-95	BM
C	030 F,G,H WAS 030 E,F,G,H	JMT	U9360	9/8/93	JN
	CHANGED NOTE SYMBOLS T[illegible] NUMBERS				
B	ADDED OPTIONS TO AIRFLOW [illegible] RACK	TW	U9107	3/8/93	
A	REVISED DECODER SHEET	TW	U8512	4/27/92	KB

UNLESS SPECIFIED OTHERWISE DIMENSIONS ARE IN INCHES. TOLERANCES ON: DECIMALS ± 0.031 ANGLES ± 0°

MATERIAL:

ClimateMaster 7300 SW 44th OKLA. CITY, OK 73179

TITLE: DOWN FLOW DECODING
EXTENDED RANGE LOW TEMPERATURE
25F – 110F

DRAWN: AP DATE: 12/13/91 DRAWING NO: 691691[illegible]
ENG: DATE: C.A.D. NO: 6916910[illegible]
ISSUED: X DATE: SCALE: .800 A SHEET 1

DRAWING NO: 69[illegible] 05

MAR 3 1 1997

DRAWING NO: 69 6

CLASS CODE: Z83

Dehumidification DOAS | TOH, TOV

1	2	3	4	5	6	7	8	9	10	11	12	13	14	15
TYPE	APPLICATION	SIZE (CAPAC			POWER SUPPLY	AIR COOLED CONDENSER	CONTROL	FILTERS	AIR FLOW CONFIG.	BLOWER DRIVE PKG.	CORROSION	AIR COOLED CONDENSER SIZE	STANDARD\SPECIAL	REVISION CODE
D	H	0	6	0	F	S	S	S	F	A	P	C	S	A

1 – TYPE
- D — DEHUMIDIFICATION/MAKEUP AIR UNIT (AIR COOLED)

2 – APPLICATION
- H=HORZ (INDOOR)
- V= VERT (INDOOR)

3 4 5 – SIZE (CAPAC
- 020–F,G,H,U
- 030–F,G,H,N,U
- 040–F,G,H,N,U
- 050–F,G,H,N,U
- 070–F,G,H,N,U
- 120–F,G,H,N,U ③
- 170–F,G,H,N,U ③
- 240–F,G,H,N,U ③

6 – POWER SUPPLY
- F = 460V/3PH/60Hz
- G = 208V/1PH/60Hz
- H = 208V/3PH/60Hz
- N = 575V/3PH/60Hz
- U = 380V/3PH/50Hz

7 – AIR COOLED CONDENSER
- S= SKID MOUNT INTERGRAL AIR COOLED HEAT REJ CONDENSER
- R= REMOTE CONDENSER AIRCOOLED

8 – CONTROL
- S= STANDARD JOHNSON A350 WITH CMC BOARD. CMC BOARD TO ACT AS LOCKOUT RELAY WITH FAULT LIGHTS, ANTI SHORT CYCLE, NSB DEVICE, EMERGENCY SHUTDOWN DEVICE, UNIT MOUNTED SENSOR
- R= STANDARD JOHNSON A350 WITH CMC BOARD. CMC BOARD TO ACT AS LOCKOUT RELAY WITH FAULT LIGHTS, ANTI SHORT CYCLE, NSB DEVICE, EMERGENCY SHUTDOWN DEVICE, REMOTE MOUTNED SENSORS
- D= STANDARD JOHNSON METASYS CONTROLLER. UNIT MOUNTED SENSORS
- E= STANDARD JOHNSON METASYS CONTROLLER. REMOTE MOUNTED SENSORS

9 – FILTERS
- S = 2" FIBERGLASS
- P = 2" 30% PLEATED
- C = 2" CLIMAKLEEN
- T = 4" CLIMAKLEEN
- D = 4" 30% PLEATED
- M = 4" 65% PLEATED
- ⚠B E = 2" EZ KLEAN

10 – AIR FLOW CONFIG.
- T = DV ONLY — TOP DISCHARGE, BACK RETURN
- F = DV ONLY — FRONT DISCHARGE, BACK RETURN
- S = DH ONLY — STRAIGHT DISCHARGE, LEFT RETURN
- D = DH ONLY — DOWN DISCHARGE, LEFT RETURN

11 – BLOWER DRIVE PKG.
- A= 3 HP DRIVE PACKAGE
- B= 2 HP DRIVE PACKAGE
- C= 1.5 HP DRIVE PACKAGE
- D= 1.0 HP DRIVE PACKAGE

SEE CHART FOR MOTOR SELECTION

12 – CORROSION
- S= STANDARD 1000 HOUR SALT SPRAY PROTECTIVE COATING ON SEE COILS, WHEEL FAN HOUSINGS, SHAFTS AND BEARINGS
- A= STANDARD 3000 HOUR SALT SPRAY PROTECTIVE COATING ON SEE COILS, WHEEL, FAN HOUSINGS, SHAFTS AND BEARINGS
- C= COPPER AIR COILS AND COPPER FINS, 1000 HOUR SALT SPRAY PROTECTIVE COATING ON, WHEEL, FAN HOUSINGS, SHAFTS AND BEARINGS.

13 – AIR COOLED CONDENSER SIZE
- A = CAC–X–5
- B = CAC–X–7
- C = CAC–X–9
- D = CAC–X–11 ⚠B
- E = CAC–X–17
- F = CAC–X–19
- G = ③
- H = ③

14 – STANDARD\SPECIAL
- S = STANDARD
- A,B,C... = SPECIALS

15 – REVISION CODE
- A = CURRENT REVISION

NOTES:
1. ALL 60HZ UNITS AGENCY LISTED FOR BOTH U.S. AND CANADIAN MARKETS. 50HZ UNITS AND SPECIALS ARE NOT AGENCY APPROVED, EXCEPT BY REQUEST.
3. NOT AVAILABLE AT THIS TIME.
4. ALL UNITS TO BE PAINTED POLAR ICE.

REV	DESCRIPTION	BY	PCN	DATE	APPROVED
B	ADDED ADDITIONAL 2"FILTER , CONDENSER & CHANGED ALL VAC TO CAC-X	JK	970022	3/20/97	
A	CHANGED CLASS CODE FROM Z79	DBM	U11073	06/17/96	

UNLESS SPECIFIED OTHERWISE DIMENSIONS ARE AS SHOWN TOLERANCES ON DECIMALS ± 0.031 ANGLES ± 0°

MATERIAL:

ClimateMaster 7300 SW 44th OKLA. CITY, OK 73179

TITLE: DECODER
AIRCOOLED MAKEUP AIR DEHUMIDIFIERS

DRAWN: DBM	DATE: 06/13/96	DRAWING NO: 69169146	
ENG:	DATE: 3/20/97	CAD NO: 69169146	
ISSUED: U11069	DATE: 06/13/96	SCALE: .800 A	SHEET: 1

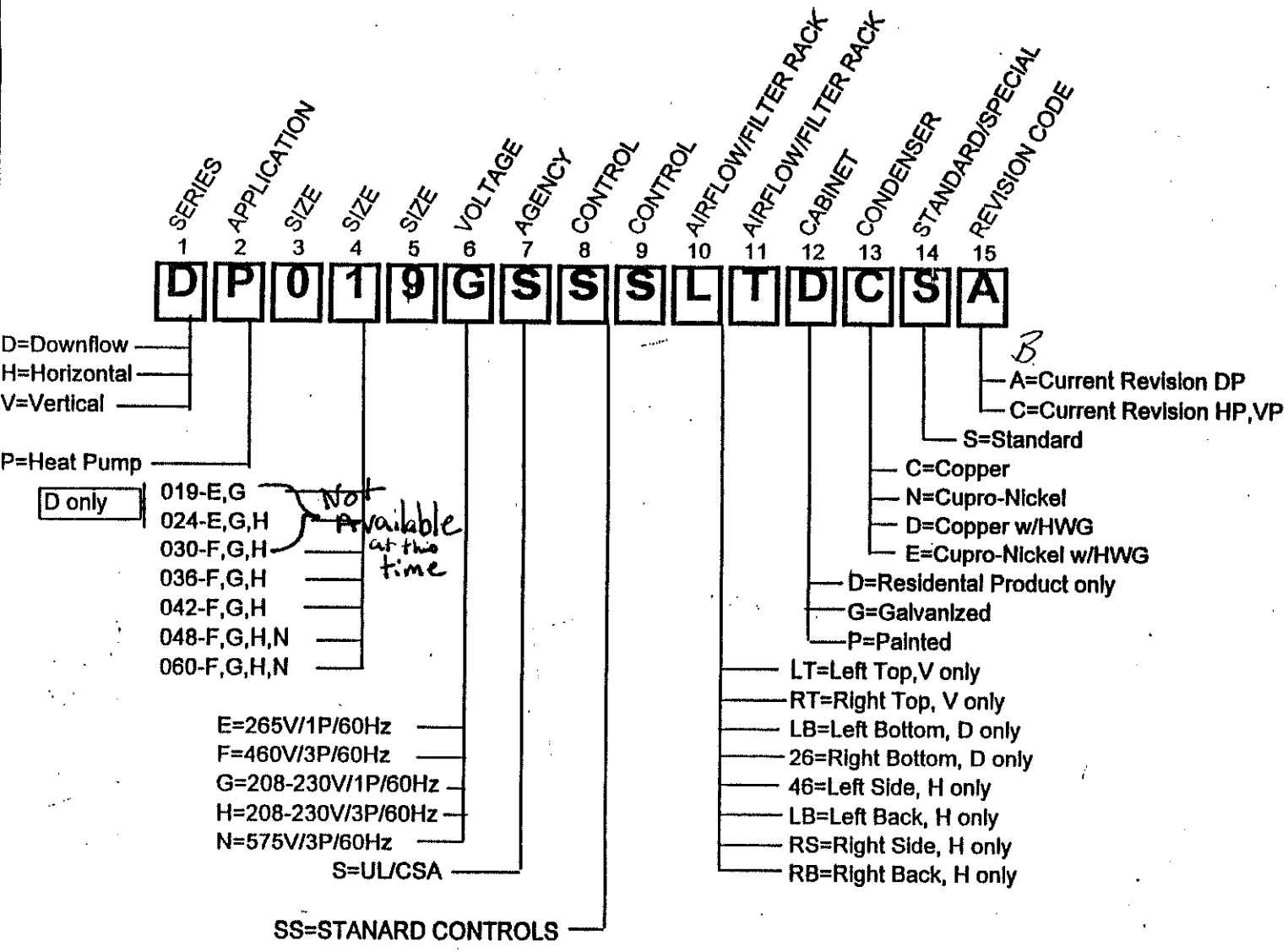
SERIES 1
APPLICATION 2
SIZE 3
SIZE 4
SIZE 5
VOLTAGE 6
AGENCY 7
CONTROL 8
CONTROL 9
AIRFLOW/FILTER RACK 10
AIRFLOW/FILTER RACK 11
CABINET 12
CONDENSER 13
STANDARD/SPECIAL 14
REVISION CODE 15
D P 0 1 9 G S S S L T D C S A
D=Downflow
H=Horizontal
V=Vertical
P=Heat Pump
D only
019-E,G
024-E,G,H
030-F,G,H
036-F,G,H
042-F,G,H
048-F,G,H,N
060-F,G,H,N
Not Available at this time
E=265V/1P/60Hz
F=460V/3P/60Hz
G=208-230V/1P/60Hz
H=208-230V/3P/60Hz
N=575V/3P/60Hz
S=UL/CSA
SS=STANARD CONTROLS
LT=Left Top,V only
RT=Right Top, V only
LB=Left Bottom, D only
26=Right Bottom, D only
46=Left Side, H only
LB=Left Back, H only
RS=Right Side, H only
RB=Right Back, H only
D=Residental Product only
G=Galvanized
P=Painted
C=Copper
N=Cupro-Nickel
D=Copper w/HWG
E=Cupro-Nickel w/HWG
S=Standard
B
A=Current Revision DP
C=Current Revision HP,VP

SRS 2/5/98

MODEL DESIGNATIONS

CODE	REFRIGERATION OPTIONS											
	AO	BO	CO	AA	BA	CA	AB	BB	CB	AC	BC	CC
Option	None			Anti-Cycle Timer			Hot Gas Bypass on Lead Compressor			Anti-Cycle Timer Hot Gas Bypass		
Copper Heat Exchanger	*			*			*			*		
Cupro-Nickel Heat Exch.		*			*			*			*	
Other Material Heat Exch.			*			*			*			*

CODE	APPLICATION
DWH	Heat Pump
DWC	Air Conditioner

DWH 051M 4B 30 AO E15

CODE	NOM. MBH	MOTOR HP
041S	47	½
041M	47	¾
051S	52	¾
051M	52	1
071S	66	1
071M	66	1½
092S	94	1½
092M	94	2
122S	121	1½
122M	121	2
142S	136	2
142M	136	3
222S	219	3
222M	219	5
262S	258	3
262M	258	5

CODE	POWER SUPPLY
3B	208/230-3-60
4B	460-3-60

CODE	FACTORY INSTALLED ELECTRIC HEATERS			
	KW	DWH 041-071	DWH 092-142	DWH 222-262
000	None	*	*	*
E06	6	*		
E09	9	*		
E12	12	*	*	*
E15	15	*	*	*
E18	18	*	*	*
E24	24	*	*	*
E30	30		*	*
E36	36		*	*
E48	48			*
E50	50			*

All Two Stage Except E06, E09, E12

CODE	CABINET OPTIONS																															
	10	20	30	40	11	21	31	41	12	22	32	42	13	23	33	43	14	24	34	44	15	25	35	45	16	26	36	46	17	27	37	47
Option	None				Sea Coast				Sure Trip				Firestat				Sea Coast Sure Trip				Sea Coast Firestat				Sure Trip Firestat				Sea Coast Sure Trip Firestat			
No Outside Air	*				*				*				*				*				*				*				*			
25% Manual Outside Air		*				*				*				*				*				*				*				*		
2 Position 25% Outside Air Damper & Oper.			*				*				*				*				*				*				*				*	
Full Economizer				*				*				*				*				*				*				*				*

ENERTECH Brand

TCH, TCV

DRAWINGNO:

Decoder EC Large Capacity

Z2S

Cross Match Table

ClimateMaster Series	Enertech Series
TCH	ECH
TCV	ECV

1 2	3	4 5 6	7	8	9	10	11	12	13 14	15
EC	H	096	A	H	C	3	A	A	LS	S

MODEL TYPE
EC = ENERTECH COMPACT COMMERCIAL R410A

CONFIGURATION
H = HORIZONTAL
V = VERTICAL

UNIT SIZE
072
096
120
160
192
240
300
(160, 192, 240, 300: VERTICAL ONLY)

REVISION LEVEL
A = CURRENT REVISION

VOLTAGE
F = 460/60/3
(2) H = 208-230/60/3 (FACTORY WIRED 208)
N = 575/60/3

(1) **CONTROLS**
ETL Approved USA & Canada
C = CXM
D = DXM
L = CXM w/LON
M = DXM w/LON
N = CXM w/MPC
P = DXM w/MPC

BLOWER DRIVE PACKAGE (3)
A = STANDARD RPM & STANDARD MOTOR
B = LOW RPM & STANDARD MOTOR
C = HIGH RPM & STANDARD MOTOR
D = STANDARD RPM & LARGE MOTOR
E = HIGH RPM & LARGE MOTOR

CABINET INSULATION / FILTER RAILS/FRAMES (4)(5)(7)

OPTION	RANGE	MUTE	1" FILTER RAILS/FRAMES	2" FILTER RAILS/FRAMES	4" FILTER RAILS/FRAMES
1	EXTENDED RANGE	NO	YES	NO	
A			NO	YES	NO
B			NO		YES
2		YES	YES	NO	
C			NO	YES	NO
D			NO		YES
3	STANDARD RANGE	NO	YES	NO	
E			NO	YES	NO
F			NO		YES
4		YES	YES	NO	
G			NO	YES	NO
H			NO		YES

AIR FLOW OPTIONS

TCH ONLY
LB = LEFT RETURN/BACK DISCHARGE
LS = LEFT RETURN/STRAIGHT DISCHARGE
RB = RIGHT RETURN/BACK DISCHARGE
RS = RIGHT RETURN/STRAIGHT DISCHARGE
VB = LEFT RETURN S.S. DRAIN PAN/BACK DISCHARGE
VS = LEFT RETURN S.S. DRAIN PAN/STRAIGHT DISCHARGE
WB = RIGHT RETURN S.S. DRAIN PAN/BACK DISCHARGE
WS = RIGHT RETURN S.S. DRAIN PAN/STRAIGHT DISCHARGE

TCV ONLY
BF = BACK RETURN/FRONT DISCHARGE
BT= BACK RETURN/TOP DISCHARGE
FB = FRONT RETURN/BACK DISCHARGE
FT = FRONT RETURN/TOP DISCHARGE
YF = BACK RETURN S.S. DRAIN PAN/FRONT DISCHARGE
YT = BACK RETURN S.S. DRAIN PAN/TOP DISCHARGE
ZB = FRONT RETURN S.S. DRAIN PAN/BACK DISCHARGE
ZT = FRONT RETURN S.S. DRAIN PAN/TOP DISCHARGE

HEAT EXCHANGER OPTIONS

OPTION	COPPER WATER COIL	CUPRO-NICKEL WATER COIL	NON-COATED AIR COIL	COATED COIL	WATER SIDE ECONOMIZER
A	YES	NO	NO	YES	NO
C			YES	NO	
J	NO	YES	NO	YES	
N			YES	NO	
1	YES	NO	NO	YES	LOW AIRSIDE PRESSURE
2			YES	NO	
3	NO	YES	NO	YES	
4			YES	NO	

(6)(7)

NOTES:
1. All units come standard with 100zVA transformer.
2. 208-230 Volt units wired for 208 Volt service
3. Refer to blower performance table in Spec catalog to determine correct Drive Package.
4. Horizontal Units come standard with Filter Rails. Filter Frames ordered as accessories. Vertical Units come standard with Filter Frames. Filter Rails ordered as accessories.
5. For Mute option, compressor incorporates rubber grommet mounting system, blower housing and Air Handler compartment are covered with high density noise suppression material.
6. When digit 12 = option "1", "2", "3" or "4" digit 9 must be option "D", "M" or "P" only.
7. When Digit 12 = option "1", "2", "3" or "4" digit 10 must be option "1", "2", "A", "B", "C", or "D".

SEE PAGE 2 FOR REVISION HISTORY

CLIMATEMASTER®
7300SW44th
OKLA.CITY,OK73179

DESCRIPTION: Decoder EC Large Capacity

DRAWN: DR	DATE: 8/14/17	ENG: MP	DATE: 8/14/17
ISSUED: 17-0326	DATE: 8/14/17	DWG #: Decoder EC Large Capacity	SHEET 1-2

Pool Units NRA

EH SERIES PRODUCT CODING . . .

1	2	3	4	5	6	7	8	9	10	11	12	13	14	15
SERIES	ARRANGEMENT	CAPACITY LBS/HR			POWER SUPPLY	AIRFLOW(DISCHARGE)	FRESH AIR	HEAT EXCHANGER	CONDENSER OPTION	CONTROLS/GUAGES	FAN DRIVE	FILTER RACK	SPECIAL ORDER	REVISION CODE
E	H	0	2	5	F	D	0	A	A	A	A	A	0	B

E = ESP

H = HORIZONTAL

008
016
025
036
060

F = 460V-3PH
G = 208/230V-1PH
H = 208/230V-3PH

D = STRAIGHT DISCHARGE
X = SPECIAL

0 = NO FRESH AITR
A = FRESH AIR WITH MANUAL DAMPER
B = FRESH AIR WITH MOT. DAMPER (ON/OFF)

0 = NO POOL OR SPA HEAT
A = POOL HEAT (PC)
B = POOL & SPA HEAT (PC)
C = SPA HEAT (PC)
D = A+HW HEAT-3WAY ON/OFF VALVE
E = B+HW HEAT-3WAY ON/OFF VALVE
F = A + HW HEAT-3WAY MOD
G = B + HW HEAT-3WAY MOD
H = POOL HT (FC)
J = H + SPA HEAT (PC)

NOTE:
PC = PARTIAL CONDENSING
FC = FULL CONDENSING

A = STANDARD

A = STD CONTROLS (008/016-ELECTRO/MECH 025/036/060-UNT CONTROLLER)
B = DRY CONTACT REMOTE DAMPER + A
C = DRY CONTACT ALARM CIRCUIT + A
D = (008/016-HW VALVE SETUP)
E = A + B + C

0 = NO CONDENSER
A = REMOTE AIR COOLED CONDENSER SET-UP
B = FACTORY INSTALLED WATER-COOLED CONDENSER
C = B + 2-WAY WATER REG. VALVE
X = SPECIAL

0 = STANDARD *
A,B,C... = SPECIAL #1,#2,#3...

A = STANDARD PACKAGE - THROWAWAY 2"
B = PLEATED 2"
C = STD WITH 1 SET PLEATED

B = CURRENT EH SERIES *

REV	DESCRIPTION	BY	PCN	DATE	APPROVED
A	ADDED OPTIONS F, G, H AND J TO HEAT EXCHANGER	TN	U10917	4/21/96	

CLIMATE MASTERS 7300 SW 44th OKLA. CITY, OK 73179

TITLE: PRODUCT DECODING SHEET EH SERIES REV.B.

DRAWN: UK	DATE: 9/13/94	DRAWING NO: 69564900	
ENG: NERU	DATE: 9/13/94	C.A.D. NO: 69564900	
ISSUED: N/A	DATE: 9/13/94	SCALE: 1.000 V	SHEET 1

DRAWING NO. 69564900

ENERGY RECOVERY VENTILATOR - OLD MODELS

ER

DRAWING NO: **Decoder ERV**

Z23

1	2	3	4	5	6	7	8	9	10	11	12	13	14	15
E	R	V	A	B	F	A	A	A	A	A	A	A	A	S

MODEL TYPE
ERV = Energy Recovery Ventilator

Cabinet Size
A = 1000 - 1600 CFM
B = 1601 - 2600 CFM
C = 2601 - 5500 CFM
D = 5501 - 10000 CFM

Revision
B = Current

Voltage
F = 460/60/3
G = 208-230/60/1
H = 208-230/60/3
N = 575/60/3

Controls
A = Stand alone ERV
B = Mated ERV
C = Stand Alone ERV with Economizer Mode
D = Mated ERV with Economizer Mode
E = C with Stop/Jog Control
F = D with Stop/Jog Control

Filters
A = 2" MERV 8 Pleated
B = 4" MERV 8 Pleated
C = 4" MERV 13 Pleated

Protection / Preheat Options
A = None
B = Frost Protection
C = Low Temperature Lockout
D = B + C
E = 5Kw
F = 10Kw
G = 15Kw
H = 20Kw

Monitor Options
A = None
B = Filter Maintenance Indicator
C = Airflow CFM Monitor

Supply/Exhaust Damper Options
A = None / Barometric
B =Motorized / Motorized
C = Motorized / Barometric
D = None / Motorized

Power Termination
A = None
B = Non-fused Disconnect
C = Fused Disconnect

Wheel Selection
A = Standard
B = Custom Selection (1)

Motor HP
A = 1HP, (A Cabinet Only)
B = 1.5HP, (A & B Cabinet Only)
C = 2HP, (B & C Cabinet Only)
D = 3HP, (B & C Cabinet Only)
E = 5HP, (C & D Cabinet Only)
F = 7.5HP, (D Cabinet Only)
G = 10HP, (D Cabinet Only)

Standard (1)
S = Standard
A, B, C etc... = SPECIAL 1, 2, 3 etc...

Notes:
1. If digit 13 is "B", digit 15 can no longer be "S" and must change to A,B,C etc...

REV	DESCRIPTION	BY	PCN	DATE	APPROVED
G	UPDATED OPTIONS ON DIGIT 11	TM	10-0520	11/2/10	MP
-	SEE PAGE 2 FOR REVISION HISTORY				

CLIMATEMASTER®
7300SW44th
OKLA.CITY,OK73179

DESCRIPTION: **DECODER ERV**

DRAWN:	DATE:	ENG:	DATE:
DR	11/02/04	MP	11/02/04

ISSUED:	DATE:	DWG #:	REV	SHEET
04--0406	11/02/04	Decoder ERV	G	1 - 1

Pool Unit NRA

EV SERIES PRODUCT CODING

1	2	3	4	5	6	7	8	9	10	11	12	13	14	15
SERIES	ARRANGEMENT	CAPACITY LBS/HR			POWER SUPPLY	AIRFLOW(DISCHARGE)	FRESH AIR	HEAT EXCHANGER	CONDENSER OPTION	CONTROLS/GUAGES	FAN DRIVE	FILTER RACK	SPECIAL ORDER	REVISION CODE
E	V	0	2	5	F	A	0	A	A	A	A	A	0	A

E = ESP

V = VERTICAL

025
040
060

F = 460V-3PH
G = 208/230V-1PH
H = 208/230V-3PH

A = TOP DISCHARGE
D = STRAIGHT DISCHARGE
X = SPECIAL

0 = NO FRESH AITR
A = FRESH AIR WITH MANUAL DAMPER
B = FRESH AIR WITH MOT. DAMPER (ON/OFF)

0 = NO POOL OR SPA HEAT
A = POOL HEAT (PC)
B = POOL & SPA HEAT (PC)
C = SPA HEAT (PC)
D = A+HW HEAT-3WAY ON/OFF VALVE
E = B+HW HEAT-3WAY ON/OFF VALVE
F = A + HW HEAT-3WAY MOD
G = B + HW HEAT-3WAY MOD
H = POOL HT (FC)
J = H + SPA HEAT (PC)

0 = NO CONDENSER
A = REMOTE AIR COOLED CONDENSER SET-UP
B = FACTORY INSTALLED WATER-COOLED CONDENSER
C = B + 2-WAY WATER REG. VALVE
X = SPECIAL

A = STD CONTROLS (UNT CONTROLLER)
B = DRY CONTACT REMOTE DAMPER + A
C = DRY CONTACT ALARM CIRCUIT + A
E = A + B + C

A = STANDARD

A = STANDARD PACKAGE - THROWAWAY 2"
B = PLEATED 2"
C = STD WITH 1 SET PLEATED

0 = STANDARD
A,B,C... = SPECIAL #1,#2,#3...

A = CURRENT EV SERIES

NOTE:
PC = PARTIAL CONDENSING
FC = FULL CONDENSING

REV	DESCRIPTION	BY	PCN	DATE	APPROVED

CLIMATE MASTERS 7300 SW 44th OKLA CITY, OK 73179

TITLE: PRODUCT DECODING SHEET
EV SERIES

DRAWN: TN	DATE: 4/23/96	DRAWING NO:	69564904
ENG: NERU	DATE: 4/23/96	C.A.D. NO:	69564904
ISSUED: U10917	DATE: 4/23/96	SCALE: 1.000 V	SHEET 1

GC Series 60Hz - R22 Submittal Data Eng/I-P

CLIMATEMASTER®

TC

GC Series Nomenclature

1 2 3 4 5 6 7 8 9 10 11 12 13 14 15

G C H 0 3 6 B G C 3 0 A L B S

Model Type
GC = Genesis Compact

Configuration
H = Horizontal
V = Vertical

Unit Size
006 (GCH Only)
009
012
018
024
030
036
041 (GCV Only)
042
048
060

Revision Level
B = Current Revision
C = For Units with ClimaDry Option in Digit 12

Voltage
G = 208-230/60/1
E = 265/60/1
H = 208-230/60/3
F = 460/60/3
N = 575/60/3

Controls
C = CXM
D = DXM
L = CXM w/LON
M = DXM w/LON
N = CXM w/MPC
P = DXM w/MPC

Cabinet Insulation
3 = Standard Range - GCV Painted
4 = Standard Range w/Ultra Quiet - GCV Painted
8 = Standard Range, GCV - Non-painted
9 = Standard Range w/Ultra Quiet, GCV - Non-painted

Future Use
0 = None

Heat Exchanger Options

	Non Coated Air Coil		Coated Air Coil	
	Copper	Cupro-Nickel	Copper	Cupro-Nickel
Standard	C	N	A	J
ClimaDry Reheat	E	N/A	D	N/A

Return Air
L = Left Return
R = Right Return
F = Front Return, Vertical 009 - 030 And 041 Only

Supply Air
B = Back Discharge
Y = Back Discharge, High Static
T = Top Discharge
V = Top Discharge, High Static
S = Straight Discharge
Z = Straight Discharge, High Static

Standard
S = Standard

Rev.: 14 Jan, 2008D

G series were the units before the TC. G series units used R-22 and T series units use R-410A. G and T units are very similar and are close to an exact dimensional fit.

GC = TC
GS = TS
GR = TR
GL = TL

ClimateMaster works continually to improve its products. As a result, the design and specifications of each product at the time of order may be changed without notice and may not be as described herein. Please contact ClimateMaster's Customer Service Department at 1-405-745-6000 for specific information on the current design and specifications. Statements and other information contained herein are not express warranties and do not form the basis of any bargain between the parties, but are merely ClimateMaster's opinion or commendation of its products. The latest version of this document is available at www.climatemaster.com.

GL Series 60Hz - R22 Submittal Data Eng/I-P

CLIMATEMASTER®

TL, TC BELT DRIVE

GL Series Nomenclature

1	2	3	4	5	6	7	8	9	10	11	12	13	14	15
G	L	H	0	9	6	B	H	C	3	A	A	L	S	S

Model Type
GL = Genesis Large Commercial

Configuration
H = Horizontal
V = Vertical

Unit Size
072 - (GLH)
096 - (GLH)
120 - (GLH)
080 - (GLV)
100 - (GLV)
120 - (GLV)
160 - (GLV)
200 - (GLV)
240 - (GLV)
300 - (GLV)

Revision Level
A = Current Revision For GLV
B = Current Revision For GLH

Voltage
H = 208-230/60/3
F = 460/60/3
N = 575/60/3

Controls
C = CXM
D = DXM
L = CXM w/LON
M = DXM w/LON
N = CXM w/MPC
P = DXM w/MPC

Cabinet Insulation
1 = Extended Range
2 = Extended Range w/UltraQuiet
3 = Standard Range
4 = Standard Range w/UltraQuiet

Blower Drive Package
A = Standard RPM w/Standard Motor
B = Low RPM w/Standard Motor
C = High RPM w/Standard Motor
D = Standard RPM w/Large Motor
E = High RPM w/Large Motor

Heat Exchanger Options

	Non Coated Air Coil		Coated Air Coil	
	Copper	Cupro-Nickel	Copper	Cupro-Nickel
Standard	C	N	A	J
ClimaDry Reheat	E	N/A	D	N/A

Air Flow Options
LS = Left Return/Straight Supply (GLH Only)
BF = Back Return/Front Supply (GLV080 - 240)
BT = Back Return/Top Supply
FB = Front Return/Back Supply (GLV080 - 240)
FT = Front Return/Top Supply

Standard
S = Standard

Rev.: 14 Jan. 2008D

ClimateMaster works continually to improve its products. As a result, the design and specifications of each product at the time of order may be changed without notice and may not be as described herein. Please contact ClimateMaster's Customer Service Department at 1-405-745-6000 for specific information on the current design and specifications. Statements and other information contained herein are not express warranties and do not form the basis of any bargain between the parties, but are merely ClimateMaster's opinion or commendation of its products. The latest version of this document is available at www.climatemaster.com.

Water to water unit TMW

Model Nomenclature

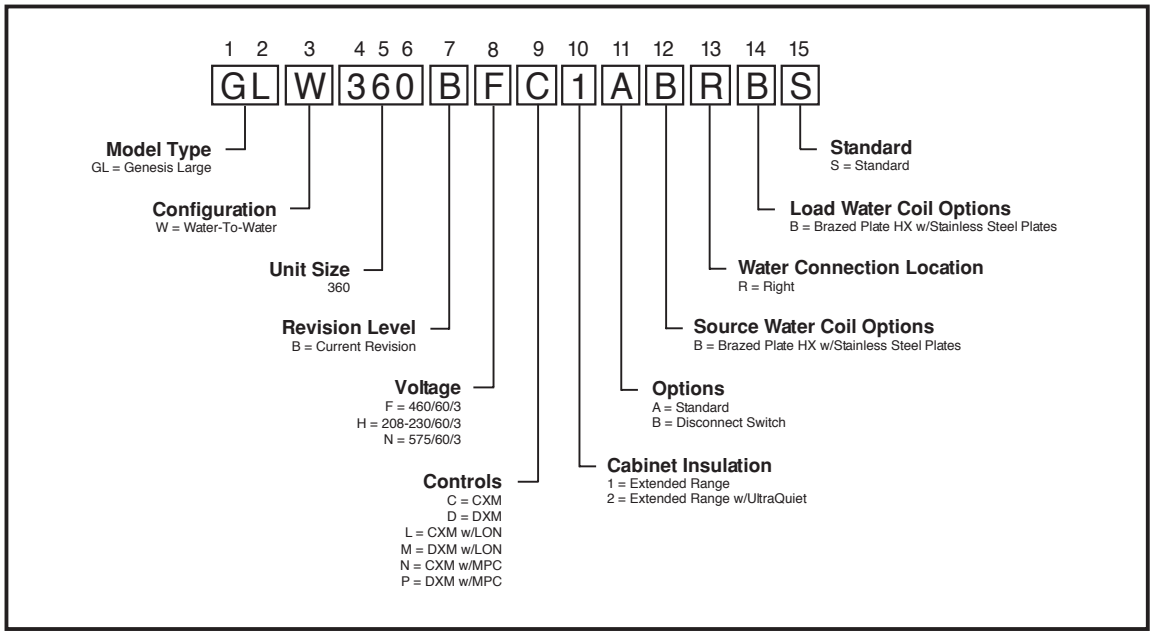

Rev.: 10/04/05D

Reference Calculations

Heating	Cooling
$LWT = EWT - \frac{HE}{GPM \times 500}$	$LWT = EWT + \frac{HR}{GPM \times 500}$

Legend and Glossary of Abbreviations

BTUH = BTU(British Thermal Unit) per hour
COP = coefficient of performance = BTUH output/BTUH input
EER = energy efficiency ratio = BTUH output/Watt input
EWT = entering water temperature
GPM = water flow in U.S. gallons/minute
HE = total heat of extraction, BTUH
HC = heating capacity, BTUH
HR = total heat of rejection, BTUH
HWC = hot water generator (desuperheater) capacity, Mbtuh
KW = total power unit input, kilowatts
LOAD = heat exchanger used as evaporator in cooling, condenser in heating
LWT = leaving water temperature, °F
MBTUH = 1000 BTU per hour
SOURCE = heat exchanger used as condenser in cooling, evaporator in heating
TC = total cooling capacity, BTUH
WPD = waterside pressure drop (psi & ft. of hd.)

Conversion Table - to convert inch-pound (English) to SI (Metric)

Water Flow	Water Pressure Drop
Water Flow (L/s) = gpm x 0.0631	PD (kPa) = PD (ft of hd) x 2.99

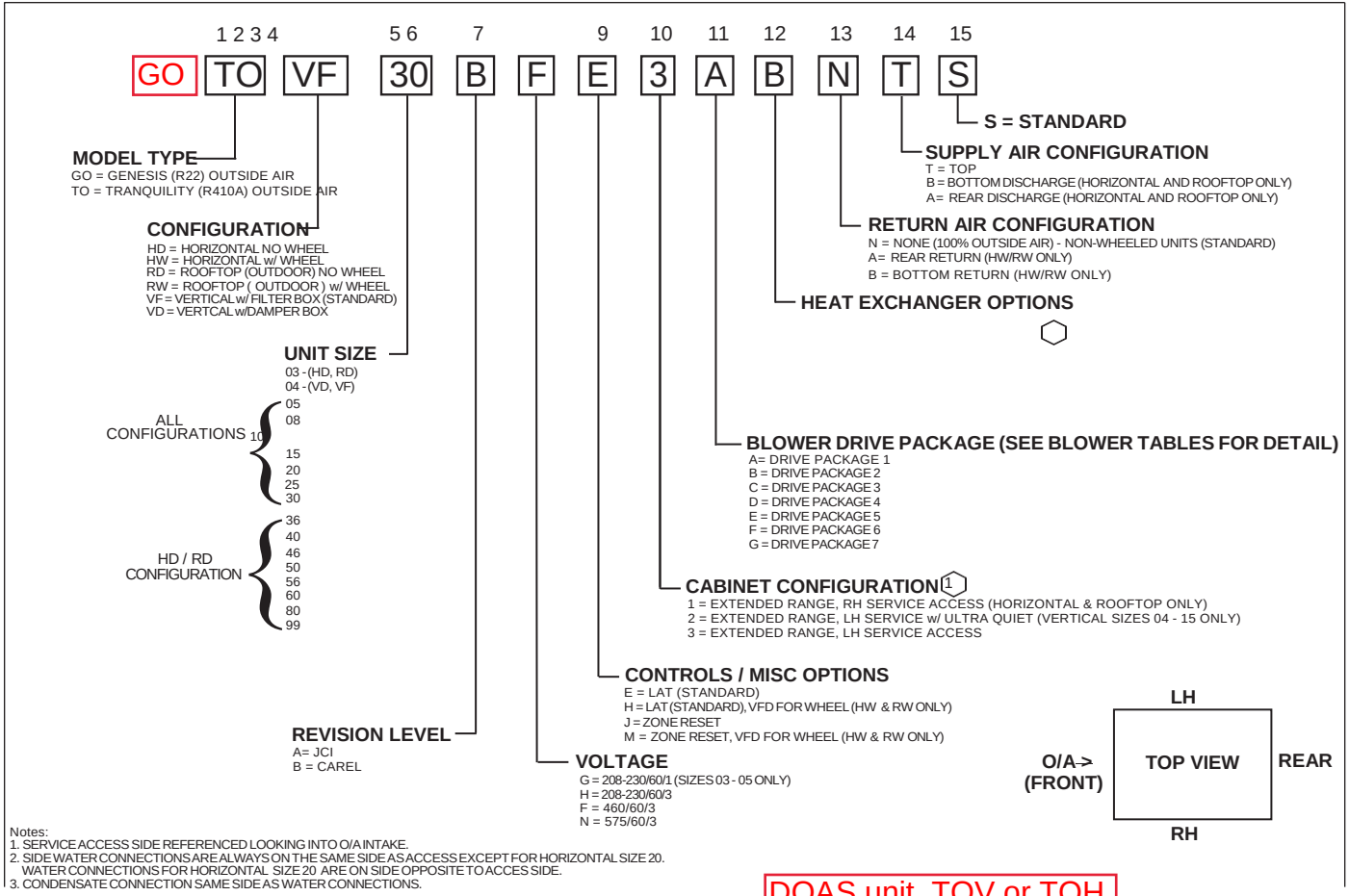

GO Series Nomenclature

	SIDE WATER CONNECTION 2	BOTTOM WATER CONNECTION
NON COATED AIR COIL	B	C
E. COATED AIR COIL	K	L

GR Series 60Hz - R22 Submittal Data Eng/I-P

CLIMATEMASTER®

Standard Efficiency | TR

GR Series Nomenclature

1	2	3	4 5 6	7	8	9	10	11	12	13	14	15
G	R	H	036	B	G	C	3	0	C	L	B	S

Model Type
GR = Genesis Reciprocating

Configuration
H = Horizontal
V = Vertical

Unit Size
006 (GRH Only)
009
012
015
019
024
030
036
042
048
060

Revision Level
A = Current Revision For Sizes 006 - 012 & 042 - 060
B = Current Revision For 019 - 036
C = Current Revision For 015

Voltage
G = 208-230/60/1
E = 265/60/1
H = 208-230/60/3
F = 460/60/3
N = 575/60/3

Controls
C = CXM
D = DXM
L = CXM w/LON
M = DXM w/LON
N = CXM w/MPC
P = DXM w/MPC

Cabinet Insulation
1 = Extended Range
2 = Extended Range w/UltraQuiet
3 = Standard Range
4 = Standard Range w/UltraQuiet

Water Circuit Options
0 = None
5 = Internal Secondary Pump
8 = Auto Flow Regulator 2.5 GPM/Ton
9 = Auto Flow Regulator 3 GPM/Ton

Heat Exchanger Options

	Non Coated Air Coil		Coated Air Coil	
	Copper	Cupro-Nickel	Copper	Cupro-Nickel
Standard	C	N	A	J
Motorized Valve	T	S	U	W

Return Air
L = Left Return
R = Right Return

Supply Air
B = Back Discharge, Horizontal Only
Y = Back Discharge, High Static (GRH048)
T = Top Discharge, Vertical Only
V = Top Discharge, High Static (GRV048)
S = Straight Discharge, Horizontal Only
Z = Straight Discharge, High Static (GRH048)

Standard
S = Standard

Rev.: 09/13/06D

ClimateMaster works continually to improve its products. As a result, the design and specifications of each product at the time of order may be changed without notice and may not be as described herein. Please contact ClimateMaster's Customer Service Department at 1-405-745-6000 for specific information on the current design and specifications. Statements and other information contained herein are not express warranties and do not form the basis of any bargain between the parties, but are merely ClimateMaster's opinion or commendation of its products. The latest version of this document is available at www.climatemaster.com.

CLIMATEMASTER
Geothermal Heat Pump Systems

HIGH EFF. TS

GS Series Nomenclature

1 2 3 4 5 6 7 8 9 10 11 12 13 14 15

GS H 036 A G C 3 0 C L B S

Model Type
GS = Genesis Scroll

Configuration
H = Horizontal
V = Vertical

Unit Size
015
018
024
030
036
042
048
060
070

Revision Level
A = Current Revision For Sizes 024 - 070
C = Current Revision For 015 - 018

Voltage
G = 208-230/60/1
E = 265/60/1
H = 208-230/60/3
F = 460/60/3
N = 575/60/3

Controls
C = CXM
D = DXM
L = CXM w/LON
M = DXM w/LON
N = CXM w/MPC
P = DXM w/MPC

Cabinet Insulation
1 = Extended Range
2 = Extended Range w/UltraQuiet
3 = Standard Range
4 = Standard Range w/UltraQuiet

Water Circuit Options
0 = None
2 = HWG (Coil Only)
5 = Internal Secondary Pump
6 = HWG (Coil Only) w/Auto Flow Regulator 2.5 GPM/Ton
7 = HWG (Coil Only) w/Auto Flow Regulator 3 GPM/Ton
8 = Auto Flow Regulator 2.5 GPM/Ton
9 = Auto Flow Regulator 3 GPM/Ton

Heat Exchanger Options

	Non Coated Air Coil		Coated Air Coil	
	Copper	Cupro-Nickel	Copper	Cupro-Nickel
Standard	C	N	A	J
ClimaDry Reheat	E	N/A	D	N/A
Motorized Valve	T	S	U	W

Return Air
L = Left Return
R = Right
V = Left, SS Drain Pan
W = Right, SS Drain Pan

Supply Air Options
B = Back Discharge, Horizontal Only
Y = Back Discharge, High Static GSH030 & 036
T = Top Discharge, Vertical Only
V = Top Discharge, High Static GSV030 & 036
S = Straight Discharge, Horizontal Only
Z = Straight Discharge, High Static GSH030 & 036
D = Bottom Discharge, Vertical Only

Standard
S = Standard

Rev.: 05 Nov, 2008B

ClimateMaster works continually to improve its products. As a result, the design and specifications of each product at the time of order may be changed without notice and may not be as described herein. Please contact ClimateMaster's Customer Service Department at 1-405-745-6000 for specific information on the current design and specifications. Statements and other information contained herein are not express warranties and do not form the basis of any bargain between the parties, but are merely ClimateMaster's opinion or commendation of its products. The latest version of this document is available at www.climatemaster.com.

Unit Model Keys

INDOOR SPLIT TEP, TES

Genesis Indoor Split (GSS) Series

1	2	3	4	5	6	7	8	9	10	11	12	13	14	15
G	S	S	0	3	6	B	G	C	0	1	C	N	N	S

Series
GS = Genesis Scroll
(Genesis Indoor Series)

Configuration
S = Split

Unit Size
018, 024, 030, 036, 042, 048, 60

Revision Level
B = Current Revision For Sizes 024 - 060
C = Current Revision For Size 018

Voltage
G = 208-230/60/1 - R22

Controls
C = CXM

Cabinet
0 = Residential

Hot WaterGenerator Options
0 = None
1 =HWG w/Internal Pump

Heat Exchanger Options

	Copper	Cupro-Nickel
Standard	C	N

Return Air Flow Configuration
N = Not Applicable

Supply Air Flow Configuration
N = Not Applicable

Standard
S = Standard

Rev.: 08/09/06D

Genesis Outdoor Split (PDW) Series

1	2	3	4	5	6	7	8	9	10	11	12
P	D	W	3	6	G	A	A	D	C	S	B

Series
PDW = Protective Design - Weatherized
(Genesis Outdoor Series)

Unit Size
18, 24, 30, 36, 42, 48, 60

Voltage
G = 208-230/60/1

Cabinet
AAD = Residential

Heat Exchanger Options

	Copper	Cupro-Nickel
Standard	C	N

Standard
S = Standard

Revision Level
B = Current

Rev.: 06/13/06D

DRAWING NO: 99D0002N02

High Efficiency | TS

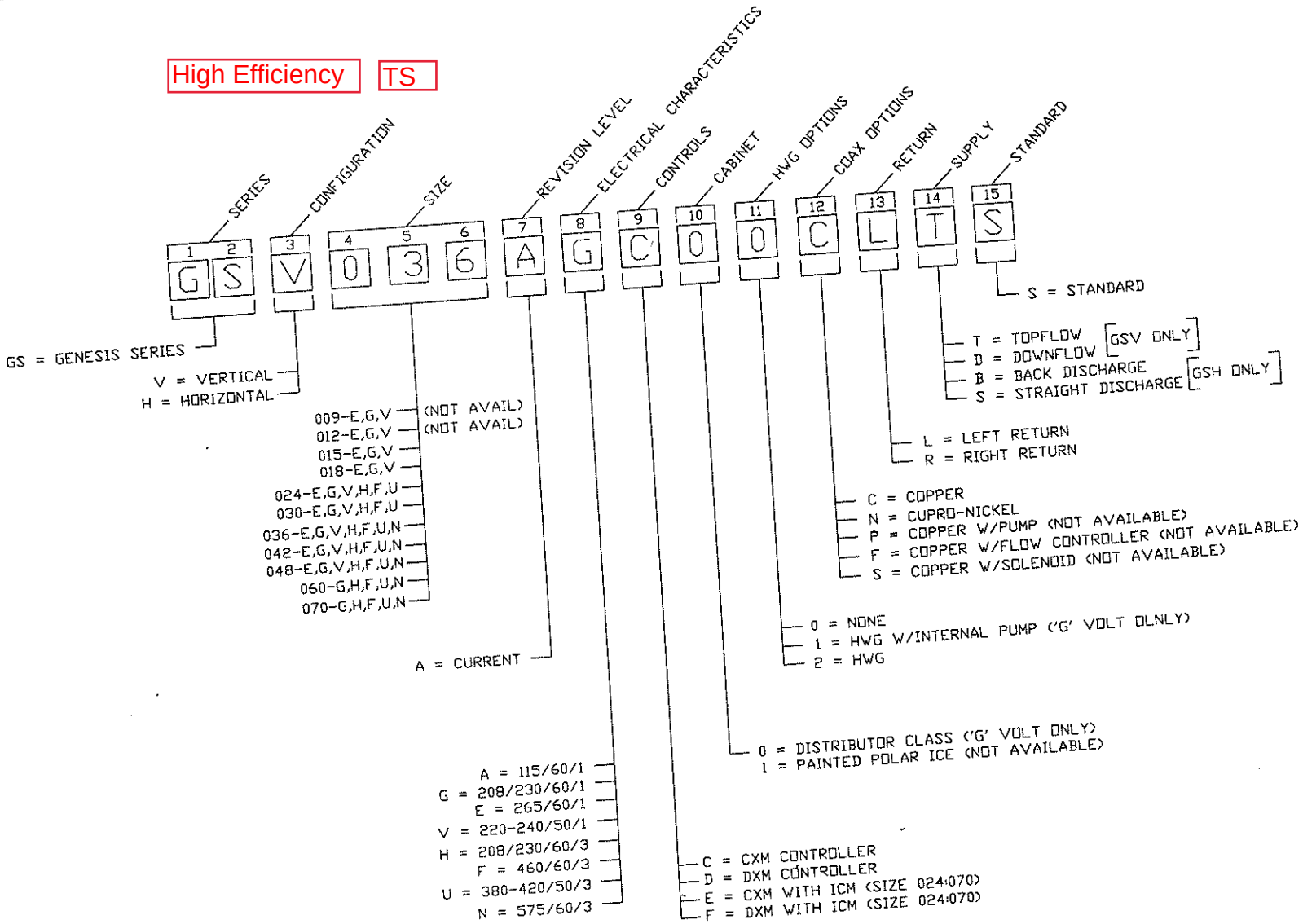

REV	DESCRIPTION	BY	PCN	DATE	APPROVED
X	X	XX			

MATERIAL:

CLIMATEMASTER • 7300 SW 44th OK CITY, OK 73179

TITLE: GENESIS DECODING SHEET
HORIZONTAL,VERTICAL SERIES

DRAWN: SR	DATE: 2/9/99	DRAWING NO: 99D0002N02	
ENG: LN	DATE: 2/24/99	CAD NO: 99D0002N02	
ISSUED: 99-0106	DATE: 2/22/99	SCALE: 1.00	A SHEET 1

GSW Series 60Hz - R22 Submittal Data Eng/I-P

CLIMATEMASTER®

WATER X WATER TMW

GSW Series Nomenclature

1	2	3	4	5	6	7	8	9	10	11	12	13	14	15
G	S	W	0	3	6	A	G	C	1	0	C	L	C	S

Model Type
GS = Genesis Series

Configuration
W = Water-To-Water

Unit Size
036
060
120

Revision Level
A = Current Revision

Voltage
G = 208-230/60/1
E = 265/60/1
H = 208-230/60/3
F = 460/60/3
N = 575/60/3

Controls
C = CXM
D = DXM
L = CXM w/LON
M = DXM w/LON
N = CXM w/MPC
P = DXM w/MPC

Cabinet Insulation
1 = Extended Range
2 = Extended Range w/UltraQuiet

Hot Water Generator Options
0 = None
2 = HWG (Coil Only)

Source Water Coil Options
C = Copper
N = Cupro-Nickel

Water Connection Location
F = Front
B = Rear
L = Left
R = Right

Load Water Coil Options
C = Copper
N = Cupro-nickel
V = Double Wall Vented (Cupro-Nickel Inner Tube)

Standard
S = Standard

Rev.: 10/04/05

ClimateMaster works continually to improve its products. As a result, the design and specifications of each product at the time of order may be changed without notice and may not be as described herein. Please contact ClimateMaster's Customer Service Department at 1-405-745-6000 for specific information on the current design and specifications. Statements and other information contained herein are not express warranties and do not form the basis of any bargain between the parties, but are merely ClimateMaster's opinion or commendation of its products. The latest version of this document is available at www.climatemaster.com.

DRAWING NO

Decoder HB

Z 7B

CLIMATEMASTER	HEAT CONTROLLER
TCH	HBH
TCV	HBV

COMPACT TC

1 2	3	4 5 6	7	8	9	10	11	12	13	14
HB	H	036	A	3	C	3	0	A	L	B

MODEL TYPE
HB = HEAT CONTROLLER COMPACT 410A

CONFIGURATION
H = HORIZONTAL
V = VERTICAL

UNIT SIZE
006 - 1,8
009 - 1,8
012 - 1,8
015 - 1,8
018 - 1,8
024 - 1,3,4,8
030 - 1,3,4,8
036 - 1,3,4,8
041 - 1,3,4, (HBV Only)
042 - 1,3,4,5
048 - 1,3,4,5
060 - 1,3,4,5

REVISION LEVEL
A = CURRENT REVISION FOR SIZES 006 - 060

VOLTAGE
1 = 208-230/60/1
2 = 265/60/1
3 = 208-230/60/3
4 = 460/60/3
5 = 575/60/3 (ECM NOT AVAILABLE)

Some H units are marketed as Heat Controller

CONTROLS
C = CXM
D = DXM
L = CXM w/LON
M = DXM w/LON
N = CXM w/MPC
P = DXM w/MPC

CABINET INSULATION
1 = EXTENDED RANGE
2 = EXTENDED RANGE, WITH ULTRA QUIET
3 = STANDARD RANGE
4 = STANDARD RANGE, WITH ULTRA QUIET
C = STANDARD RANGE, COOLING ONLY, VERTICAL UNITS

FUTURE USE
0 = NONE
3 = DISCHARGE PRESSURE WATER REGULATING VALVE (COOLING ONLY)
NOT AVAILABLE ON UNIT SIZES 006, 009 AND 012

HEAT EXCHANGER OPTIONS
A = Copper Water Coil w/E-Coated Air Coil
C = Copper Water Coil w/Non-Coated Air Coil
J = Cupro-Nickel Water Coil w/E-Coated Air Coil
N = Cupro-Nickel Water Coil w/Non-Coated Air Coil 009-030 and 041 only
1 - Copper Water Coil/Tin-Plated Air Coil/E-Coated Water Side Economizer Coil
2 - Copper Water Coil/Water Side Economizer
3 - Cupro-Nickel Water Coil/Tin-Plated Air Coil/E-Coated Water Side Economizer
4 - Cupro-Nickel Water Coil/Water Side Economizer Coil

RETURN AIR OPTIONS
L = LEFT RETURN
R = RIGHT RETURN
F = FRONT RETURN, VERTICAL 009-030 and 041 only
V = LEFT RETURN, S.S DRAIN PAN
W = RIGHT RETURN, S.S DRAIN PAN
Z = FRONT RETURN, S.S. DRAIN PAN 009-030 and 041 only

SUPPLY AIR OPTIONS
B = BACK DISCHARGE, HORIZONTAL ONLY
Y = BACK DISCHARGE, HIGH STATIC
HORIZONTAL 018 - 060, But Not 041
T = TOP DISCHARGE, VERTICAL ONLY
V = TOP DISCHARGE, HIGH STATIC
VERTICAL 018 - 060, But Not 041
S = STRAIGHT DISCHARGE, HORIZONTAL ONLY
Z = STRAIGHT DISCHARGE, HIGH STATIC
HORIZONTAL 018 - 060, But Not 041
K = TOP DISCHARGE, ECM
VERTICAL 015-060, But Not 041
N-VOLTAGE NOT AVAILIBLE.
P = BACK DISCHARGE, ECM
HORIZONTAL 015 - 060, But Not 041
N-VOLTAGE NOT AVAILIBLE.
W = STRAIGHT DISCHARGE, ECM
HORIZONTAL 015 - 060, But Not 041
N-VOLTAGE NOT AVAILIBLE.

REV	DESCRIPTION	BY	PCN	DATE	APPROVED
E	ADDED OPTIONS D, L, M, N & P TO DIGIT 9	MB	14-0175	04/03/14	BA
D	REMOVED PAINT NOTES FROM DIGIT 2 CONFIGURATION OPTIONS	TM	13-0649	11/27/13	BA
C	UPDATED UNIT SIZE 024 VOLTAGE OPTIONS	TM	12-0322	07/19/12	JE
B	REMOVED VOLTAGE OPTIONS 3 & 4 FORM UNIT SIZE 024.	TM	10-0155	04/01/10	WW
A	ADDED OPTION 1 & 2 TO DIGIT 10	TM	10-0034	01/18/10	WW
-	INITIAL RELEASE	TM	09-0128	4/2/09	WW

7300SW44th
OKLA.CITY,OK73179

CLIMATEMASTER®

DESCRIPTION: Decoder HB

DRAWN: TM	DATE: 4/2/09	ENG: WW	DATE: 4/2/09
ISSUED: 09-0128	DATE: 4/2/09	DWG #: Decoder HB	A SHEET 1-2

HEAT CONTROLLER TC

DRAWING NO: Decoder H C

Z 20

1 2	3	4 5 6	7	8	9	10	11	12	13	14
HC	H	036	B	3	C	3	0	A	L	B

MODEL TYPE
HC = HEAT CONTROLLER COMPACT

CONFIGURATION
H = HORIZONTAL (NON PAINTED)
V = VERTICAL (PAINTED POLAR ICE)

UNIT SIZE
006 - 1,8 (HCH Only)
009 - 1,8
012 - 1,8
018 - 1,8
024 - 1,3,4,8
030 - 1,3,4,8
036 - 1,3,4,8
041 - 1,3,4, (HCV Only)
042 - 1,3,4,5
048 - 1,3,4,5
060 - 1,3,4,5

REVISION LEVEL
B = CURRENT REVISION FOR SIZES 006 - 060

VOLTAGE
1 = 208-230/60/1 - R22
8 = 265/60/1 - R22
3 = 208-230/60/3 - R22
4 = 460/60/3 - R22
5 = 575/60/3 - R22

CONTROLS
C = CXM

CABINET INSULATION
3 = STANDARD RANGE
4 = STANDARD RANGE, WITH ULTRA QUIET
C = STANDARD RANGE, COOLING ONLY, VERTICAL UNITS

FUTURE USE
0 = NONE
3 = DISCHARGE PRESSURE WATER REGULATING VALVE (COOLING ONLY)
NOT AVAILABLE ON UNIT SIZES 006, 009 AND 012

HEAT EXCHANGER OPTIONS
A = Copper Water Coil w/E-Coated Air Coil
C = Copper Water Coil w/Non-Coated Air Coil
J = Cupro-Nickel Water Coil w/E-Coated Air Coil
N = Cupro-Nickel Water Coil w/Non-Coated Air Coil 009-030 and 041 only

RETURN AIR OPTIONS
L = LEFT RETURN
R = RIGHT RETURN
F = FRONT RETURN, VERTICAL 009-030 and 041 only
V = LEFT RETURN, S.S DRAIN PAN
W = RIGHT RETURN, S.S DRAIN PAN
Z = FRONT RETURN, S.S. DRAIN PAN 009-030 and 041 only

SUPPLY AIR OPTIONS
B = BACK DISCHARGE, HORIZONTAL ONLY
Y = BACK DISCHARGE, HIGH STATIC HORIZONTAL 018 - 060, But Not 041
T = TOP DISCHARGE, VERTICAL ONLY
V = TOP DISCHARGE, HIGH STATIC VERTICAL 018 - 060, But Not 041
S = STRAIGHT DISCHARGE, HORIZONTAL ONLY
Z = STRAIGHT DISCHARGE, HIGH STATIC HORIZONTAL 018 - 060, But Not 041

REV	DESCRIPTION	BY	PCN	DATE	APPROVED
-	- -	--	-- - ----	- -/- -/- -	- -
-	- -	--	-- - ----	- -/- -/- -	- -
-	- -	--	-- - ----	- -/- -/- -	- -
B	ADDED OPTION “4” TO DIGIT 10.	TM	07-0326	08/17/07	WW
A	UPDATE DIGIT 11, OPTION 3.	TM	07-0009	01/05/07	WW
-	INITIAL RELEASE	TM	05-0344	10/11/05	WW

CLIMATEMASTER®
7300SW44th
OKLA.CITY,OK73179

DESCRIPTION: Decoder HC

DRAWN:	DATE:	ENG:	DATE:
TM	10/11/05	WW	10/11/05

ISSUED:	DATE:	DWG #:		SHEET
05 - 0344	10/11/05	Decoder HC	A	1 - 1

HEAT CONTROLER | TAH

DRAWING NO:

Decoder HDG - Heat Controller

Z2E

CLM SERIES	Heat Controller SERIES
TAH	HDG

1	2	3	4 5	6	7	8	9	10
H	D	G	2 4	V	S	A	1	A

MODEL TYPE
H = DX AIR HANDLER

CONFIGURATION
D = WATER SOURCE

REFRIGERANT
R410A

NOMINAL CAPACITY
24
36
48
60

TXV TYPE
V = TXV w/ECM DRIVE

CONTROLS
S = STANDARD

CABINET SIZE

	WIDTH X HEIGHT (INCHES)
A	UNIT SIZE 24 ONLY ; 18.5 X 44
B	UNIT SIZE 24, 36, 48 ONLY ; 22.5 X 55
C	UNIT SIZE 36, 48, 60, ONLY ; 25.5 X 59

VOLTAGE
1 = 208-230/1 (FIELD CONVERTIBLE TO 115V)

REVISION
A = CURRENT REVISION

Notes:
1. Units will be painted with Polar Ice, and come standard with AXM controls and ECM Motor.

REV	DESCRIPTION	BY	PCN	DATE	APPROVED
-	- -	- -	- - ----	- -/- -/- -	- -
-	- -	- -	- - ----	- -/- -/- -	- -
-	- -	- -	- - ----	- -/- -/- -	- -
-	- -	- -	- - ----	- -/- -/- -	- -
-	- -	- -	- - ----	- -/- -/- -	- -
-	- -	- -	- - ----	- -/- -/- -	- -

CLIMATEMASTER®
7300SW44th
OKLA.CITY,OK73179

DESCRIPTION: Decoder HDG - Heat Controller

DRAWN: TM	DATE: 2/9/11	ENG: EL	DATE: 2/9/11
ISSUED: 11-0064	DATE: 2/9/11	DWG #: Decoder HDG-Heat Controller	A SHEET 1

HEAT CONTROLLER TAH

DRAWING NO:

Decoder HDG - Heat Controller

Z2E

CLM SERIES	Heat Controller SERIES
TAH	HDG

1	2	3	4 5	6	7	8	9	10
H	D	G	2 4	V	S	A	1	A

MODEL TYPE
H = DX AIR HANDLER

CONFIGURATION
D = WATER SOURCE

REFRIGERANT
R410A

NOMINAL CAPACITY
24
36
48
60

TXV TYPE
V = TXV w/ECM DRIVE

CONTROLS
S = STANDARD

CABINET SIZE

	WIDTH X HEIGHT (INCHES)
A	UNIT SIZE 24 ONLY ; 18.5 X 44
B	UNIT SIZE 24, 36, 48 ONLY ; 22.5 X 55
C	UNIT SIZE 36, 48, 60, ONLY ; 25.5 X 59

VOLTAGE
1 = 208-230/1 (FIELD CONVERTIBLE TO 115V)

REVISION
A = CURRENT REVISION

Notes:
1. Units will be painted with Polar Ice, and come standard with AXM controls and ECM Motor.

REV	DESCRIPTION	BY	PCN	DATE	APPROVED
-	- -	- -	- - ----	- -/- -/- -	- -
-	- -	- -	- - ----	- -/- -/- -	- -
-	- -	- -	- - ----	- -/- -/- -	- -
-	- -	- -	- - ----	- -/- -/- -	- -
-	- -	- -	- - ----	- -/- -/- -	- -
-	- -	- -	- - ----	- -/- -/- -	- -

CLIMATEMASTER®
7300SW44th
OKLA.CITY,OK73179

DESCRIPTION: Decoder HDG - Heat Controller

DRAWN: TM	DATE: 2/9/11	ENG: EL	DATE: 2/9/11
ISSUED: 11-0064	DATE: 2/9/11	DWG #: Decoder HDG-Heat Controller	A SHEET 1

HEAT CONTROLLER TV

DRAWINGNO:

Decoder HDV, HDH Commercial

Z4H

1 2	3	4 5 6	7	8	9	10	11	12	13	14
H D	V	0 2 4	A	1	D	1	0	A	L	T

SERIES
HD = Tranquility 22 Digital

CONFIGURATION
V = Vertical Up
H = Horizontal

UNIT SIZE
024
030
036
042
048
060

REVISION LEVEL
A = Current Revision

VOLTAGE
1 = 208-230/60/1
8 = 265/60/1
3 = 208-230/60/3
4 = 460/60/3

CONTROLS
D = DXM2

CABINET
1 = EXTENDED RANGE
2 = EXTENDED RANGE, WITH ULTRA QUIET
3 = STANDARD RANGE
4 = STANDARD RANGE, WITH ULTRA QUIET
C = STANDARD RANGE, COOLING ONLY, VERTICAL UNITS

FUTURE USE
0 = NONE
3 = DISCHARGE PRESSURE WATER REGULATING VALVE (COOLING ONLY)
NOT AVAILABLE ON UNIT SIZES 006, 009 AND 012

HEAT EXCHANGER OPTIONS

	Non-Coated Air Coil		Tin Plated Air Coil	
	Copper	Cupro-Nickel	Copper	Cupro-Nickel
Standard	C	N	A	J

RETURN AIR FLOW CONFIGURATION
L = Left Return
R = Right Return

SUPPLY AIR FLOW & MOTOR CONFIGURATION

	Supply	Configuration	Motor
T	Top	HDV	ECM
B	Back	HDH	ECM
S	Straight	HDH	ECM

Notes:
1. Commercial Units are to be all Galvanized.

SEE PAGE 2 FOR REVISIONS

CLIMATEMASTER®
7300SW44th
OKLA.CITY,OK73179

DESCRIPTION: Decoder HDV, HDH Commercial

DRAWN: TM	DATE: 9/9/11	ENG: JE	DATE: 9/9/11
ISSUED: 11-0473	DATE: 9/9/11	DWG #: Decoder HDV HDH Commercial	- SHEET 1-2

DRAWING NO: 69[illegible]02

ASS CODE: Z32

COMPACT | TC

1	2	3	4	5	6	7	8	9	10	11	12	13	14	15
SERIES	APPLICATION	SIZE (CAPACITY)			POWER SUPPLY	AGENCY	CONTROL		AIRFLOW/FILTER RACK		CABINET	CONDENSER	STANDARD/SPECIAL	REVISION CODE
H	E	0	3	6	G	S	S	S	L	S	P	C	S	A

HORIZONTAL

E = EXTENDED RANGE HEAT PUMP

006–E,G,V
009–E,G,V
012–E,G,V
015–E,G,V
019–E,G,V
024–E,G,V
030–F,G,H,U
036–E,F,G,H,U,V
③ 042–F,G,H,U
048–F,G,H,N,U
060–F,G,H,N,U
072–F,G,H,U
096–F,G,H,N,U
120–F,G,H,N,U

E = 265V/1PH/60Hz
F = 460V/3PH/60Hz
G = 208V,230V/1PH/60Hz ⑥
H = 208V,230V/3PH/60Hz ⑥
N = 575V/3PH/60Hz ④
U = 380V/3PH/50Hz ①
V = 220V,240V/1PH/50Hz ①

C = CSA ONLY
N = NON UL/NON CSA
S = UL/CSA

REFER TO SHEET 2 ⑤
FOR COMERCIAL
CONTROL OPTIONS

RETURN/DISCHARGE/FILTER RACK

③
LS = LEFT/STRAIGHT/1"
LB = LEFT/BACK/1"
RS = RIGHT/STRAIGHT/1"
RB = RIGHT/BACK/1"
L2 = LEFT/STRAIGHT/2"
R2 = RIGHT/STRAIGHT/2"
LF = LEFT/BACK/2"
RF = RIGHT/BACK/2"

② C = COPPER
D = COPPER w/HWG
E = CuNi w/HWG
N = CUPRO/NICKEL
P = COPPER w/WATER VALVE WIRING
Q = CuNi w/WATER VALVE WIRING

D = DISTRIBUTOR (PAINTED) 21" FS		
COMMERCIAL UNITS	33.5" FS	21" FS
GALVANIZED	G	H
PAINTED	P	Q
MUTE PACKAGE (GALV)	M	N

A = STANDARD EFFICIENCY, SIZES 006–015; 042–120
B = STANDARD EFFICIENCY, SIZE 036 ONLY; AWF

COMPRESSOR

SIZE	VOLTAGE
019	G,E,V
024	G
030	F,U,H

B

S = STANDARD
A,B,C,...(EXCEPT S) = SPECIAL

ES:
ON UL/CSA.
HWG AVAILABLE ON SIZES 019–060
ONLY, AND 230V UNITS ONLY (G & H)
LS or L2 ARE THE ONLY AVAILABLE
OPTIONS ON SIZES 042–120.
CSA ONLY.
DISTRIBUTOR UNITS COME STANDARD
WITH ANTI-SHORT CYCLE TIMER AND
SERVICE SIGNAL TO TSTAT. DIGITS 8
& 9 ARE "SS" FOR DIGIT 12=D.
DISTRIBUTOR UNITS ARE WIRED FOR 230V POWER.
COMMERCIAL UNITS ARE WIRED FOR 208V POWER.

REV	DESCRIPTION	BY	PCN	DATE	APPROVED
T	DELETED NOTES 7,8; DELETED REVISION CODE OPTION C	RSS	U10345	2/05/95	BM
S	ADDED TO NOTE 5; ADDED BUBBLE REFERENCING NOTE 5. ADDED NOTES 7,8; ADDED E TO SIZE OPTION 030; ADDED N TO SIZE OPTION 042; ADDED TO REV OPTION C	RSS	U10293	3/28/95	BM
Q	ADDED BUBBLES REFERENCING NOTE 6; MISC OTHER NOTE REFERENCES	DR	U10194	2-1-95	BM
P	ADDED CLASS CODE & NOTE 6, REVISED DIGITS 12 & 15	TW	U9848	6/13/94	WW
	DDED "E, V, 030, F,U & H" TO REV CODE	JMC	98-0078	02/12/98	W
	DED 'B' REV CODE, REMOVED ITEMS 'F,H & U' FROM SIZE 024	JMC	97-0430	11/24/97	WW

UNLESS SPECIFIED OTHERWISE DIMENSIONS ARE IN INCHES. TOLERANCES ON DECIMALS = ±0.01 ANGLES = ±1°

MATERIAL:

ClimateMaster 7300 SW 44th OKLA. CITY, OK 73179

TITLE: HORIZONTAL SERIES DECODER
EXTENDED RANGE/LOW TEMP/25°–110°F

DRAWN: RL | DATE: 10/17/90 | DRAWING NO: 69169102
ENG: U/K | DATE: U/K | C.A.D. NO: 69169102
ISSUED: U/K | DATE: U/K | SCALE: .800 | B | SHEET 1

DRAWING NO: 99D0002N06

SS CODE: Z32

COMPACT | TC

1	2	3	4	5	6	7	8	9	10	11	12	13	14	15
SERIES	APPLICATION	SIZE (CAPACITY)			POWER SUPPLY	AGENCY	CONTROL		AIRFLOW/FILTER RACK		CABINET	CONDENSER	STANDARD/SPECIAL	REVISION CODE
H	E	0	2	4	G	S	C	M	L	S	G	C	S	C

HORIZONTAL

E = EXTENDED RANGE (25-110) HEAT PUMP

006-E,G,V (1)
009-E,G,V (1)
012-E,G,V (1)
015-E,G,V (1)
019-E,G,V (1)
024-E,G,V (1)
(3) 072-F,G,H,U (1)
096-F,G,H,N,U (1)
120-F,G,H,N,U (1)

E = 265V/1PH/60Hz
F = 460V/3PH/60Hz
G = 208V,230V/1PH/60Hz
H = 208V,230V/3PH/60Hz
N = 575V/3PH/60Hz
U = 380V/3PH/50Hz
V = 220V,240V/1PH/50Hz
(1)

N-NO SAFETY AGENCY APPROVAL
S-SAFETY AGENCY APPROVED FOR USA & CANADA MARKETS

REFER TO SHEET 2 FOR COMERCIAL CONTROL OPTIONS
SS FOR DISTRIBUTOR CONTROLS (4)

RETURN/DISCHARGE/FILTER RACK
(3) LS = LEFT/STRAIGHT/1"
LB = LEFT/BACK/1"
RS = RIGHT/STRAIGHT/1"
RB = RIGHT/BACK/1"

D = DISTRIBUTOR (GALVANIZED) (4)
COMMERCIAL UNITS: (5)
G = GALVANIZED
M = MUTE PACKAGE (GALVANIZED)

(2) C = COPPER
D = COPPER w/HWG
E = CuNi w/HWG
N = CUPRO/NICKEL

S = STANDARD
A,B,C,...(EXCEPT S) = SPECIAL

C = CURRENT REVISION (11/98) W/ CXM & DXM AIRCOIL END DRAIN; FOR PREVIUOS REVISIONS SEE 69502102

SAFETY AGENCY APPROVAL. DIGIT 7 = N.
AVAILABLE ON SIZES 019-024
Y, AND 230V UNITS ONLY (G & H)
IS THE ONLY AVAILABLE ON RETURN/DISCHARGE
ION ON SIZES 072-120.
TRIBUTOR UNITS HAVE NO OPTIONS,
E STANDARD WITH 75VA TRANSFORMER, CXM BOARD,
P PUMP TERMINAL BLOCK, AND ARE WIRED FOR
V POWER (DIGIT 6 = G). DIGITS 7,8,&9 =SSS.
T 6 = G OR H UNITS ARE WIRED FOR 208V POWER.

HEAT CONTROLLER | TL BELT DRIVE

DRAWING NO: **Decoder HL**

Z 20

1 2	3	4 5 6	7	8	9	10	11	12	13 14
HL	H	096	B	3	C	3	A	C	LS

MODEL TYPE
HL = HEAT CONTROLLER LARGE COMMERCIAL

CONFIGURATION
H = HORIZONTAL (NON PAINTED)
V = VERTICAL (PAINTED POLAR ICE)

UNIT SIZE
072 - (HLH)
096 - (HLH)
120 - (HLH)
080 - (HLV)
100 - (HLV)
120 - (HLV)
160 - (HLV)
200 - (HLV)
240 - (HLV)
300 - (HLV)

REVISION LEVEL
A = CURRENT REVISION FOR HLV
B = CURRENT REVISION FOR HLH

VOLTAGE
3 = 208-230/60/3 (Factory wired 208V)
4 = 460/60/3
5 = 575/60/3 (Not Available HLH 072)

CONTROLS
C = CXM (CSA/NRTL for USA & CANADA)

CABINET INSULATION
3 = STANDARD RANGE

BLOWER DRIVE PACKAGE
A = STANDARD RPM & STANDARD MOTOR
B = LOW RPM & STANDARD MOTOR
C = HIGH RPM & STANDARD MOTOR (NOT AVAILABLE HLH120)
D = STANDARD RPM & LARGE MOTOR (AVAILABLE HLH096 & HLH120 ONLY)
E = HIGH RPM & LARGE MOTOR (NOT AVAILABLE HLV160 & HLV300)

HEAT EXCHANGER OPTIONS
C = Copper Water Coil w/Non-Coated Air Coil
N = Cupro-Nickel Water Coil w/Non-Coated Air Coil

AIR FLOW OPTIONS
LS = LEFT RETURN/STRAIGHT SUPPLY (HLH ONLY)
BF = BACK RETURN/FRONT SUPPLY (HLV080 thru 240)
BT = BACK RETURN/TOP SUPPLY (HLV080 thru 300)
FB = FRONT RETURN/BACK SUPPLY (HLV080 thru 240)
FT = FRONT RETURN/TOP SUPPLY (HLV080 thru 300)
VS = LEFT RETURN/STRAIGHT SUPPLY, S.S DRAIN PAN (HLH ONLY)
YF = BACK RETURN/FRONT SUPPLY, S.S DRAIN PAN (HLV080 thru 240)
YT = BACK RETURN/TOP SUPPLY, S.S. DRAIN PAN (HLV080 thru 300)
ZB = FRONT RETURN/BACK SUPPLY, S.S DRAIN PAN (HLV080 thru 240)
ZT = FRONT RETURN/TOP SUPPLY, S.S. DRAIN PAN (HLV080 thru 300)

NOTES:
1. 75 VA TRANSFORMER STANDARD.

REV	DESCRIPTION	BY	PCN	DATE	APPROVED
-	--	--	-- - ----	- -/- -/- -	--
-	--	--	-- - ----	- -/- -/- -	--
-	--	--	-- - ----	- -/- -/- -	--
-	--	--	-- - ----	- -/- -/- -	--
-	--	--	-- - ----	- -/- -/- -	--
-	INITIAL RELEASE	TM	05-0344	10/11/05	WW

CLIMATEMASTER®
7300SW44th
OKLA.CITY,OK73179

DESCRIPTION: Decoder HL

DRAWN:	TM	DATE:	10/10/05	ENG:	WW	DATE:	10/10/05
ISSUED:	05-0344	DATE:	10/10/05	DWG #:	Decoder HL	A	SHEET 1-1

69169140

CLASS CODE: Z73

COMPACT HORIZONTAL | TCH

1	2	3	4	5	6	7	8	9	10	11	12	13	14	15
H	P	0	3	6	G	S	S	S	L	S	P	C	S	C
SERIES	APPLICATION	SIZE (CAPACITY)			POWER SUPPLY	AGENCY	CONTROL		AIRFLOW/FILTER RACK		CABINET	CONDENSER	STANDARD/SPECIAL	REVISION CODE

HORIZONTAL

P = EXTENDED RANGE HEAT PUMP
R = EXTENDED RANGE COOLING ONLY
A = EXTENDED RANGE HEAT PUMP R407C
B = EXTENDED RANGE COOLING ONLY R407C
④

030-E,F,G,H,U,V
036-E,F,G,H,U,V
042-F,G,H,N,U
048-F,G,H,N,U
060-F,G,H,N,U

E = 265V/1PH/60Hz
F = 460V/3PH/60Hz
G = 208V,230V/1PH/60Hz
H = 208V,230V/3PH/60Hz
⑥
N = 575V/3PH/60Hz
U = 380V/3PH/50Hz
V = 220V,240V/1PH/50Hz
①

N = NON CSA/NRTL
S = CSA/NRTL

REFER TO SHEET 2 ⑤
FOR COMERCIAL
CONTROL OPTIONS

RETURN/DISCHARGE/FILTER RACK

LS = LEFT/STRAIGHT/1"
LB = LEFT/BACK/1"
RS = RIGHT/STRAIGHT/1"
RB = RIGHT/BACK/1"
L2 = LEFT/STRAIGHT/2"
R2 = RIGHT/STRAIGHT/2"
LF = LEFT/BACK/2"
RF = RIGHT/BACK/2"

D = DISTRIBUTOR (PAINTED) 21" FS		
COMMERCIAL UNITS	33.5" FS	21" FS
GALVANIZED	G	H
PAINTED	P	Q
④ MUTE PACKAGE (GALV)	M	N

C = CURRENT REV

S = STANDARD
A,B,C,...(EXCEPT S) = SPECIAL

②
C = COPPER
D = COPPER w/HWG
E = CuNi w/HWG
N = CUPRO/NICKEL
P = COPPER w/WATER VALVE WIRING
Q = CuNi w/WATER VALVE WIRING

NOTES:
1. NON CSA/NRTL
2. HWG AVAILABLE ON SIZES 019-060 ONLY, AND 230V UNITS ONLY (G & H)
4. NOT AVAILABLE AT THIS TIME
5. DISTRIBUTOR UNITS COME STANDARD WITH ANTI-SHORT CYCLE TIMER AND SERVICE SIGNAL TO TSTAT. DIGITS 8 & 9 ARE "ZS" FOR DIGIT 12=D.
6. DISTRIBUTOR UNITS ARE WIRED FOR 230V POWER. COMMERCIAL UNITS ARE WIRED FOR 208V POWER.

REV	DESCRIPTION	BY	PCH	DATE	APPROVED
A	REVISED DIGIT 4,6,7,15 CHANGED NOTE 4 AND 1 REMOVED NOTE 3	JFK	U10627	11/09/95	

ClimateMaster 7300 SW 44th OKLA. CITY, OK 73179

TITLE: HORIZONTAL SERIES DECODER
EXTENDED RANGE 25°-110°F

DRAWN: RSS	DATE: 5/02/95	DRAWING NO: 69169140	
ENG: BM	DATE: 5/08/95	C.A.D. NO: 69169140	
ISSUED: U10345	DATE: 5/08/95	SCALE: .800	B SHEET 1

DRAWING NO 99D0002N08

S CODE: Z73

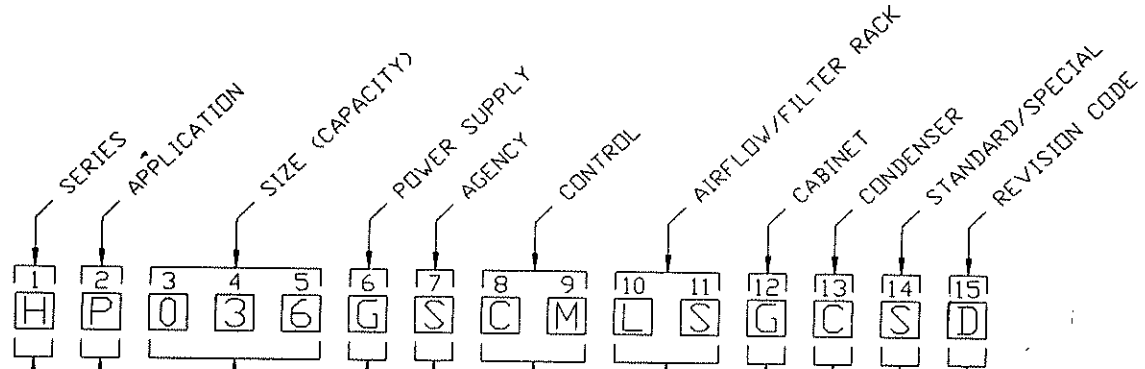

HORIZONTAL

P = HIGH EFFICIENCY EXTENDED RANGE (25-110) HEAT PUMP

030-E,F,G,H,U①,V ①
036-E,F,G,H,U①,V ①
042-F,G,H,N,U ①
048-F,G,H,N,U ①
060-F,G,H,N,U ①

E = 265V/1PH/60Hz
F = 460V/3PH/60Hz
G = 208V,230V/1PH/60Hz
H = 208V,230V/3PH/60Hz
N = 575V/3PH/60Hz
U = 380V/3PH/50Hz
V = 220V,240V/1PH/50Hz
} ①

N-NO SAFETY AGENCY APPROVAL
S-SAFETY AGENCY APPROVED FOR USA & CANADA MARKETS

RETURN/DISCHARGE/FILTER RACK

LS = LEFT/STRAIGHT/1'
LB = LEFT/BACK/1'
RS = RIGHT/STRAIGHT/1'
RB = RIGHT/BACK/1'

REFER TO SHEET 2 FOR COMMERCIAL CONTROL OPTIONS
SS = FOR DISTRIBUTOR CONTROLS ③

D = DISTRIBUTOR (GALVANIZED) ③
COMMERCIAL UNITS ④
GALVANIZED
MUTE PACKAGE (GALVANIZED)

② C = COPPER
D = COPPER w/HWG
E = CuNi w/HWG
N = CUPRO/NICKEL

S = STANDARD
A,B,C,...(EXCEPT S) = SPECIAL

D = CURRENT REVISION (11/98) W/ CXM & DXM. FOR PREVIOUS REVISIONS SEE 69169140.

S:
SAFETY AGENCY APPROVAL. DIGIT 7 = N.
G AVAILABLE ON SIZES 030-060
LY, AND 230V UNITS ONLY (G & H)
STRIBUTOR UNITS HAVE NO OPTIONS,
ME STANDARD WITH 75VA TRANSFORMER, CXM BOARD,
OP PUMP TERMINAL BLOCK, AND ARE WIRED FOR
OV POWER (DIGIT 6 = G). DIGITS 7,8,&9 =SSS.
IT 6 = G OR H UNITS ARE WIRED FOR 208V POWER.

DRAWING NO:
Decoder HR

Z 20

HEAT CONTROLLER TR

1 2	3	4 5 6	7	8	9	10	11	12	13	14
HR	H	036	B	1	C	0	0	A	L	B

MODEL TYPE
HR = HEAT CONTROLLER RECIPROCATING

CONFIGURATION
H = HORIZONTAL
V = VERTICAL

UNIT SIZE
019
024
030
036
042
048
060
070

REVISION LEVEL
A = CURRENT REVISION FOR SIZES 042 - 070
B = CURRENT REVISION FOR 019-036

VOLTAGE
1 = 208-230/60/1 - R22

CONTROLS
C = CXM (CSA/NRTL for USA & CANADA)

CABINET INSULATION
0 = RESIDENTIAL

WATER CIRCUIT OPTIONS
0 = NONE
1 = HWG w/ INTERNAL PUMP

HEAT EXCHANGER OPTIONS
A = Copper Water Coil w/E-Coated Air Coil
J = Cupro-Nickel Water Coil w/E-Coated Air Coil

RETURN AIR OPTIONS
L = LEFT RETURN
R = RIGHT RETURN

SUPPLY AIR OPTIONS
B = BACK DISCHARGE, HORIZONTAL ONLY
T = TOP DISCHARGE, VERTICAL ONLY
S = STRAIGHT DISCHARGE, HORIZONTAL ONLY

NOTES:
1. RESIDENTIAL CLASS UNITS COME STANDARD w/75 VA TRANSFORMER, ULTRA-QUIET INSULATION, STAINLESS STEEL DRAIN PAN, LOOP PUMP AND HWG CONNECTIONS. UNITS ARE PAINTED POLAR ICE.

REV	DESCRIPTION	BY	PCN	DATE	APPROVED
-	- -	- -	-- - ----	--/--/--	---
-	- -	- -	-- - ----	--/--/--	---
-	- -	- -	-- - ----	--/--/--	---
-	- -	- -	-- - ----	--/--/--	---
A	ADDED ULTRA-QUIET INSULATION AND STAINLESS STEEL DRAIN PAN TO NOTE 1	TM	07-0051	02/13/07	SH
-	INITIAL RELEASE	TM	05-0344	10/11/05	WW

CLIMATEMASTER®
7300SW44th
OKLA.CITY,OK73179

DESCRIPTION: Decoder HR

DRAWN:	TM	DATE:	10/11/05	ENG:	WW	DATE:	10/11/05
ISSUED:	05-0344	DATE:	10/11/05	DWG #:	Decoder HR	A	SHEET 1-1

CLASS CODES:
HC = Z30
HL = Z29
HM = Z31
HS = Z24

COMPACT HORIZONTAL | TCH

PRODUCT CODING

One of the most common older units

HORIZONTAL UNITS (COMMERICAL)

1	2	3	4	5	6	7	8	9	10	11	12	13	14	15
SERIES	APPLICATION	SIZE(CAPACITY)			POWER SUPPLY	AGENCY	CONTROLS		AIR FLOW FILTER RACK		CABINET	CONDENSER	STANDARD/SPECIAL	REVISION CODE
H	S	0	1	9	G	S	S	S	L	S	G	C	S	A

H = HORIZONTAL

S = STANDARD RANGE HEAT PUMP
L = LOW TEMPERATURE HEAT PUMP
① C = STANDARD RANGE COOL ONLY
① M = LOW TEMPERATURE COOL ONLY

006–G/E/V ②
009–A/G/E/V ②
012–A/G/E/V ②
015–G/E/V ②
019–G/E/V ②
024–G/E/V ②
030–G/E/V②/F/H/U ②
036–G/E/V②/F/H/U ②
042–G/F/H/U ①
③ 048–G/F/H/U②/N ①
060–G/F/H/U②/N ①
072–F/H/U ①
096–F/H/U②/N ①
120–F/H/U②/N ①

④A = 115V/1PH/60Hz
E = 265V/1PH/60Hz
F = 460V/3PH/60Hz
G = 208V–230V/1PH/60Hz
H = 208V–230V/3PH/60Hz
②U = 380V–420V/3PH/50Hz
② V = 220V–240V/1PH/50Hz
①N = 575V/3PH/60Hz

U–UL
C–CSA
N–NON UL/CSA
S–UL/CSA

SEE PAGE 2 FOR COMMERCIAL CONTROL OPTIONS ⑤

RETURN/DISCHARGE/FILTER RACK
LS = LEFT/STR/1" ③
RS = RIGHT/STR/1"
LB = LEFT/BACK/1"
RB = RIGHT/BACK/1"
XA = SPECIAL
BL = BACK/LEFT/1"④
BR = BACK/RIGHT/1"④
L2 = LEFT/STR/2" ③
R2 = RIGHT/STR/2"
LF = LEFT/BACK/2"
RF = RIGHT/BACK/2"
2L = BACK/LEFT/2"④
2R = BACK/RIGHT/2"④

D = DISTRIBUTOR (PAINTED) ⑤
COMMERCIAL UNITS: ⑦
G = GALVANIZED
P = PAINTED
C = CHICAGO PLENUM (GALVANIZED) SEE TABLE 1
M = MUTE PACKAGE (GALVANIZED)

C = COPPER
N = CUPRO–NICKEL
X = SPECIAL
P = COPPER (WATER VALVE WIRING)
Q = CUPRO–NICKEL (WATER VALVE WIRING) ⑥
R = COPPER(WATER REGULATING VALVE SCHRADER PORT) ⑥
S = CUPRO–NICKEL(WATER REGULATING VALVE SCHRADER PORT)

S = STANDARD
A,B,C...(EXCEPT S) SPECIAL

A = CURRENT REVISION (SIZES 006–015;048–120)
B = SIZES 036/042 (NEW BLOWER DISCHARGE CONFIGURATION 9/6/93) AWF COMPRESSOR

SIZE	VOLTAGE
019	G,E,V
024	G,E,V
030	G,E,V,H,F&U

W = CIAT
Y = EUROPEAN (SIZES 006–015; 036–120)②
Z = EUROPEAN (SIZE 030V VOLTAGE)②

Same as A
Same as B

NOTES:
1. CSA ONLY.
2. NON UL/CSA. DIGIT 7 = N
3. LS IS THE ONLY AVAILABLE RETURN/DISCHARGE OPTION FOR SIZES 048–120.
4. ONLY AVAILABLE ON SIZES 009–012.
5. DISTRIBUTOR UNITS HAVE NO OPTIONS, COME STANDARD WITH ANTI–SHORT CYCLE AND SERVICE SIGNAL TO TSTAT, AND ARE WIRED FOR 230V POWER (DIGIT 6 = G OR H).
6. WATER REGULATING VALVE SCHRADER PORT OPTIONS R & S NOT AVAILABLE FOR HL AND HM UNITS.
7. DIGIT 6 = G OR H UNITS ARE WIRED FOR 208V POWER.

TABLE 1

CHICAGO PLENUM AVAILIBILITY			
SIZE	VOLTAGE		
009	E		G
012	E		G
015	E		G
019	E		G
024	E		G
030		F	G
036		F	G
042		F	G
048		F	G
060		F	G

REV	DESCRIPTION	BY	PCN	DATE	APPROVED
S	ADDED "E,V,F &U" TO REV CODE	JMC	98-0078	02/12/98	
R	ADDED 'Z' & SIZES TO THE REV CODE	JMC	97-0430	11/24/97	WW
P	ADDED REV OPTION Y AND TO NOTE 2	RSS	U10475	7/25/95	BM
N	REARRANGED DIGIT 12 LISTINGS, ADDED NOTE 7	TW	U10194	2-1-95	BM
M	1 WAS •, 2 WAS +, 3 WAS ++, 4 WAS +++ ADDED TABLE 1 & NOTE 6	JMT	U9360	9/8/93	WW

MATERIAL:

ClimateMaster 7300 SW 44th OKLA. CITY, OK 73179

TITLE: HS/HL/HC/HM DECODING SHEET

DRAWN: KN	DATE: 7/6/90	DRAWING NO. 69185700	
ENG. PG	DATE: 7/6/90	C.A.D. NO. 69185700	
MODEL: U7708	DATE: 12/20/90	SCALE: .500	C SHT. 1 of 2

DRAWING NO: 99D0002N04

ASS CODES:
L = Z29
S = Z24

Compact Horizontal

TCH

HORIZONTAL UNITS (COMMERICAL)

1	2	3	4	5	6	7	8	9	10	11	12	13	14	15
H	S	0	1	9	G	S	C	M	L	S	G	C	S	C
SERIES	APPLICATION	SIZE(CAPACITY)			POWER SUPPLY	AGENCY	CONTROLS		AIR FLOW FILTER RACK		CABINET	CONDENSER	STANDARD/SPECIAL	REVISION CODE

H = HORIZONTAL

S = STANDARD RANGE (60-95) HEAT PUMP
W TEMPERATURE RANGE (40-110) HEAT PUMP

006-G/E/V ①
009-G/E/V ①
012-G/E/V ①
015-G/E/V ①
019-G/E/V ①
024-G/E/V ①
030-G/E/V ①/F/H/U ①
036-G/E/V ①/F/H/U ①
042-G/F/H/U ①
② 048-G/F/H/U ①/N
060-G/F/H/U ①/N
072-F/H/U ①
096-F/H/U ①/N
120-F/H/U ①/N

E = 265V/1PH/60Hz
F = 460V/3PH/60Hz
G = 208V-230V/1PH/60Hz
H = 208V-230V/3PH/60Hz
①U = 380V-420V/3PH/50Hz
①V = 220V-240V/1PH/50Hz
N = 575V/3PH/60Hz

N-NO SAFETY AGENCY APPROVAL
S-SAFETY AGENCY APPROVED FOR USA & CANADA MARKETS
E - EUROPEAN 'CE' MARKED.
DIGIT 6=V FOR SIZES 006-030
DIGIT 6=U FOR SIZES 036-120
HL UNITS ONLY

SEE PAGE 2 FOR COMMERCIAL CONTROL OPTIONS
SS FOR DISTRIBUTOR CONTROLS ③

RETURN/DISCHARGE/FILTER RACK
② LS = LEFT/STR/1"
RS = RIGHT/STR/1"
LB = LEFT/BACK/1"
RB = RIGHT/BACK/1"
XA = SPECIAL

D = DISTRIBUTOR (GALVANIZED) ③
COMMERCIAL UNITS: ④
G = GALVANIZED
M = MUTE PACKAGE (GALVANIZED)

C = COPPER
N = CUPRO-NICKEL
X = SPECIAL

S = STANDARD
A,B,C...(EXCEPT S) SPECIAL

C = CURRENT REVISION (11/98) W/AIRCOIL
END DRAIN; CXM & DXM.
FOR PREVIOUS REVISIONS, SEE 69185700.

SAFETY AGENCY APPROVAL. DIGIT 7 = N OR E.
IS THE ONLY AVAILABLE RETURN/DISCHARGE
ON FOR SIZES 048-120.
RIBUTOR UNITS HAVE NO OPTIONS,
STANDARD WITH 75VA TRANSFORMER, CXM BOARD,
PUMP TERMINAL BLOCK, AND ARE WIRED FOR
V POWER (DIGIT 6 = G). DIGITS 7,8,&9 =SSS.
T 6 = G OR H UNITS ARE WIRED FOR 208V POWER.

X X
XX

MATERIAL:

CLIMATEMASTER • 7300 SW 44th OK CITY, OK 73179

TITLE: HS/HL DECODING SHEET

DRAWN: JK	DATE: 9/29/98	DRAWING NO: 99D0002N04	
ENG:	DATE: 10/16	CAD NO: 99D0002N04	

DRAWING NO:
Decoder HS

CLASS CODES:
HS = Z24

HORIZONTAL UNITS
(COMMERICAL)

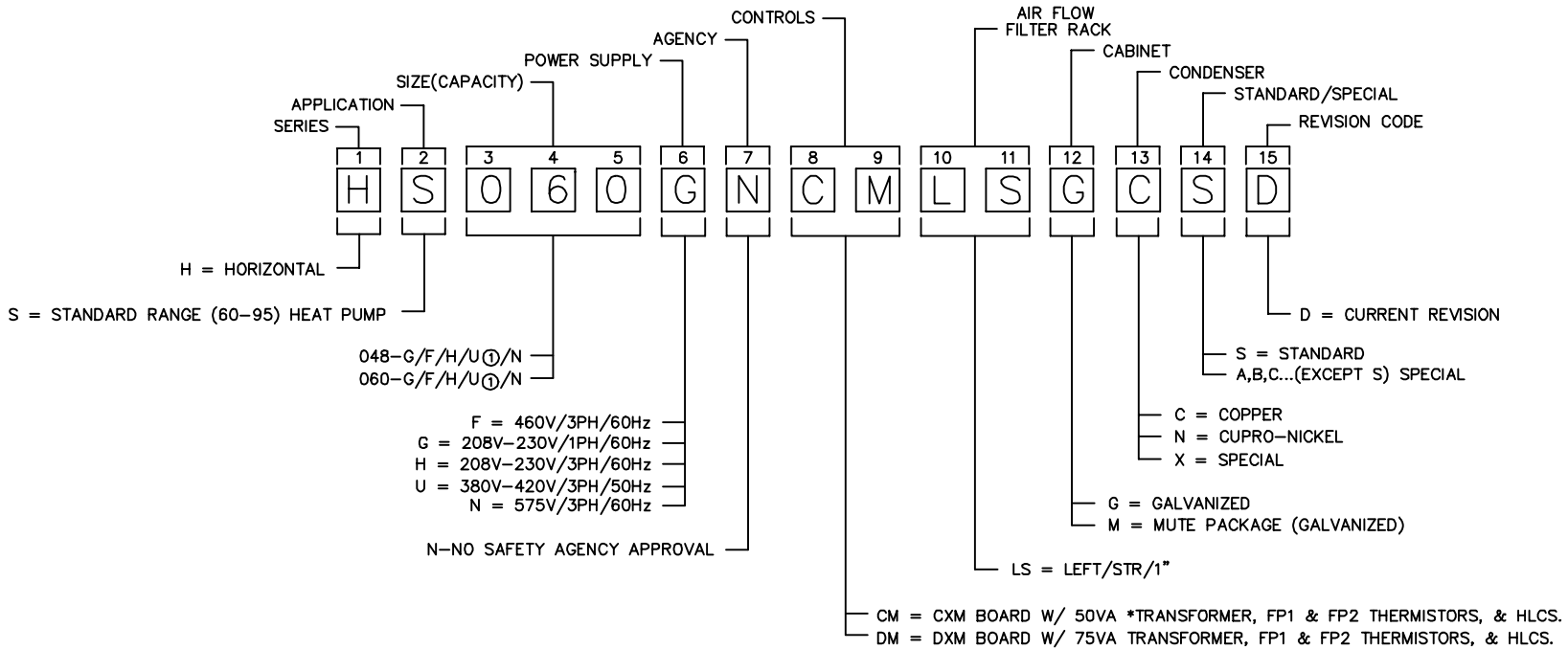

NOTES:
1. DIGIT 6 = G OR H UNITS ARE WIRED FOR 208V POWER.

REV	DESCRIPTION	BY	PCN	DATE	APPROVED
–	–	–			
–	–	–			
–	–	–			
–	–	–			–
A	REMOVED (HL ONLY) ON DIGIT 8 & 9	SAM	04–0249	6/29/04	
–	INITIAL RELEASE (REFER TO "DECODER HS HL" FOR PREVIOUS REVISTIONS)	DR	04–0126	04/14/04	NERU

CLIMATEMASTER
7300 SW 44th
OKLA. CITY, OK 73179

DRAWING NO: Decoder HS

DRAWN: DR	DATE: 04/14/04	ENG: NERU	DATE: 04/14/04
ISSUED: 04-0162	DATE: 04/14/04		A SHEET 1

DRAWING NO:

Decoder HSS

Z 20

1 2	3	4 5 6	7	8	9	10	11	12	13	14
HS	S	036	B	1	C	0	1	C	N	N

MODEL TYPE
HS = SERIES

CONFIGURATION
S = SPLIT INDOOR

UNIT SIZE
018
024
030
036
042
048
060

REVISION LEVEL
B = CURRENT REVISION FOR SIZES 024 - 060
C = CURRENT REVISION FOR SIZES 018

VOLTAGE
1= 208-230/60/1

CONTROLS
C = CXM

CABINET INSULATION
0 = RESIDENTIAL CLASS

HOT WATER GENERATOR OPTIONS
0 = NONE
1 =HWG w/INTERNAL PUMP

HEAT EXCHANGER OPTIONS
C = Copper Water Coil
N = Cupro-Nickel Water Coil

RETURN AIR OPTIONS
N = NOT APPLICABLE

SUPPLY AIR OPTIONS
N = NOT APPLICABLE

REV	DESCRIPTION	BY	PCN	DATE	APPROVED
-	- -	--	-- - ----	- -/- -/- -	- -
-	- -	--	-- - ----	- -/- -/- -	- -
-	- -	--	-- - ----	- -/- -/- -	- -
-	- -	--	-- - ----	- -/- -/- -	- -
A	ADD OPTION C AND UPDATE OPTION A TO DIGIT 7 .	TM	06-0334	08/03/06	SH
-	INITIAL RELEASE	TM	05-0344	10/11/05	WW

CLIMATEMASTER®
7300SW44th
OKLA.CITY,OK73179

DESCRIPTION: Decoder HSS

DRAWN:	DATE:	ENG:	DATE:
TM	10/11/05	WW	10/11/05

ISSUED:	DATE:	DWG #:		SHEET
05-0344	10/11/05	Decoder HSS	A	1-1

DRAWING NO:
Decoder HSW

Z 20

1 2	3	4 5 6	7	8	9	10	11	12	13	14
HS	W	036	A	1	C	1	0	C	F	C

MODEL TYPE
HS = HEAT CONTROLLER SERIES HIGH EFFICIENCY

CONFIGURATION
W = WATER TO WATER

UNIT SIZE
036 - 1,8,3,4
060 - 1,3,4,5
120 - 1,3,4,5

REVISION LEVEL
A = CURRENT

VOLTAGE
(2) (3) 1 = 208-230/60/1 - R22
8 = 265/60/1 - R22
3 = 208-230/60/3 - R22
4 = 460/60/3 - R22
5 = 575/60/3 - R22

CONTROLS
C = CXM (CSA/NRTL for USA & CANADA)

CABINET INSULATION
0 = RESIDENTIAL ("G" VOLTAGE ONLY)
1 = COMMERCIAL EXTENDED RANGE

HOT WATER GENERATOR OPTIONS
0 = NONE
1 = HWG w/INTERNAL PUMP(RESIDENTIAL)

SOURCE WATER COIL OPTIONS
C = Copper
N = Cupro-Nickel

WATER CONNECTION LOCATION
F = FRONT
B = REAR (SIZE 120 ONLY)
L = LEFT (SIZE 120 ONLY)
R = RIGHT (SIZE 120 ONLY)

LOAD WATER COIL OPTIONS
C = Copper
N = Cupro-Nickel

NOTES:
1. UNITS ARE PAINTED POLAR ICE, EXTENDED RANGE STANDARD.
2. RESIDENTIAL UNITS COME STANDARD WITH 75VA TRANSFORMER FACTORY WIRED FOR 240V. AND WITH 1" SWIVEL CONNECTIONS. 120V HAS FPT WATER CONNECTIONS.
3. COMMERCIAL UNITS COME STANDARD WITH 50VA TRANSFORMER (036 & 060) AND 75VA TRANSFORMER (120) FACTORY WIRED FOR 208V, AND FPT WATER CONNECTIONS.

REV	DESCRIPTION	BY	PCN	DATE	APPROVED
-	- -	- -	-- - ----	- -/- -/- -	- -
-	- -	- -	-- - ----	- -/- -/- -	- -
C	UPDATE DIGIT 11, OPTION 0. UPDATE NOTE 3	TM	06-0016	1/09/06	SH
B	ADD OPTION 0 TO DIGIT 10, UPDATE OPTION 0, ADD OPTION 1 TO DIGIT 11, REMOVE OPTION 2 FROM DIGIT 11.	TM	05-0473	12/22/05	SH
A	REMOVE OPTION 0 FROM DIGIT10. REMOVE OPTION 1 FROM DIGIT 11. REMOVE NOTE 2 AND CHANGE NOTE 3 TO NOTE 2	TM	05-0435	12/01/05	SH
-	INITIAL RELEASE	TM	05-0344	10/11/05	WW

CLIMATEMASTER®
7300SW44th
OKLA.CITY,OK73179

DESCRIPTION: Decoder HSW

DRAWN:	TM	DATE:	10/11/05	ENG:	WW	DATE:	10/11/05
ISSUED:	05-0344	DATE:	10/11/05	DWG #:	Decoder HSW	A	SHEET 1

DRAWINGNO:

Decoder HTV, HTD, HTH

Z 15

HEAT CONTROLLER TE

Cross Match Table

CLM Series	Heat Controller Series
TTV	HTV
TTD	HTD
TTH	HTH

1 2	3	4 5 6	7	8	9	10	11	12	13	14
HT	V	0 3 6	C	1	C	0	1	J	L	K

SERIES
HT = Heat Controller Two Stage

CONFIGURATION
V = Vertical Up Flow
D = Vertical Down Flow
H = Horizontal

UNIT SIZE
024
036
048
060
070

REVISION LEVEL
A = Current Revision, (Obsolete 4-9-12, 036 Only)
(Obsolete 6-28-12, 024, 048, 060, and 070)
B = Current Revision K5 Compressor, (Effective 4-9-12, 036 Only)
(Effective 7-10-12, 024, 048, 060, and 070)
C = Current Revision K5 Compressor and Microchannel Air Coil
(036 Only, Effective 3-1-13)

VOLTAGE
1 = 208-230/60/1 (1)

CONTROLS
C = CXM
D = DXM (Reheat only)

CABINET
0 = Residential (1)

WATER CIRCUIT OPTIONS
0 = None
1 = HWG w/Internal Pump

HEAT EXCHANGER OPTIONS

(2)	Tin Plated Coil	
	Copper	Cupro-Nickel
Standard	A	J

RETURN AIR FLOW CONFIGURATION
L = Left Return
R = Right Return

SUPPLY AIR FLOW & MOTOR CONFIGURATION

	Supply	Configuration	Motor
K	Top	HTV	ECM
N	Down	HTD	ECM
P	Back	HTH	ECM
W	Straight		

Notes:
1. Units are to be painted Polar Ice. Units available with CXM controls only.
All units come standard with 75VA Transformer, Loop Pump &
HWG Connections and R410A Refrigerant.
2. Rev “C” units come standard with Non-Coated Microchannel Air Coils.

SEE SHEET 2 FOR REVISION HISTORY

CLIMATEMASTER®
7300SW44th
OKLA.CITY,OK73179

DESCRIPTION: Decoder HTV, HTD, HTH

DRAWN: TM	DATE: 01/03/07	ENG: WW	DATE: 01/03/07
ISSUED: 07-0005	DATE: 01-03-07	DWG #: Decoder HTV	G SHEET 1-2

DRAWINGNO:

Decoder HZS Residential

Z6L

HEAT CONTROLLER TES

Cross Match Table

CLM Series	HeatController
TES	HZS

1 2	3	4 5 6	7	8	9	10	11	12	13	14
HZ	S	036	B	1	D	0	0	C	N	N

MODEL TYPE
HZ = HEAT CONTROLLER RESIDENTIAL 410A

CONFIGURATION
S = SPLIT (INDOOR)

UNIT SIZE
024
036
048
060
070

REVISION LEVEL
B = Current Revision

VOLTAGE
1 = 208-230/60/1

CONTROLS
D = DXM 2
B = DXM 2 w/DISCONNET
4 = DXM 2 w/SECURE START

CABINET INSULATION
0 = RESIDENTIAL

WATER CIRCUIT OPTIONS
0 = NONE
(2) 1 = Internal Flow Controller Standard Head
(2) 2 = Internal Flow Controller High Head
(3) 5 = Motorized Valve (Modulating). Closed Loop Application, Low System Pressure Drop.
(3) 6 = Motorized Valve (Modulating). Open Loop Application, High System Pressure Drop.

HEAT EXCHANGER OPTIONS

	Copper	Cupro-Nickel
HWG w/Pump (Standard)	C	N
No HWG	A	J

RETURN AIR OPTIONS
N = NOT APPLICABLE

SUPPLY AIR OPTIONS
N = NOT APPLICABLE

NOTES:
1. RESIDENTIAL CLASS UNITS COME STANDARD w/75 VA TRANSFORMER AND TWO STAGE SCROLL COMPRESSORS. UNITS ARE PAINTED POLAR ICE.
2. FLOW CONTROLLER COMES STANDARD WITH VARIABLE SPEED PUMP, FLUSHING VALVES, AND EXPANSION TANK. INTERNAL FLOW CONTROLLER IS ONLY AVAILABLE WHEN DIGIT 12 OPTION IS SELECTED FOR COPPER COAX.
3. MOTORIZED VALVE IS TWO WAY MODULATING. IF DIGIT 11 IS OPTION “5”, DIGIT 12 MUST BE OPTION “C” OR “A”. IF DIGIT 11 IS OPTION “6” DIGIT 12 MUST BE “N” OR “J”.

SEE PAGE 2 FOR REVISIONS

CLIMATEMASTER®
7300SW44th
OKLA.CITY,OK73179

DESCRIPTION: Decoder HZS Residential

DRAWN: TM	DATE: 03/11/15	ENG: SH	DATE: 03/11/15
ISSUED: 15-0134	DATE: 03/11/15	DWG #: Decoder HZS Residential	A SHEET 1-2

NRA

1	2	3	4	5	6	7	8	9	10	11	12	13	14	15
L	V	3	6	0	A	F	S	0	6	S	C	R	R	S
SERIES		SIZE (NOM CAPACITY MBH)			REV. CODE	POWER SUPPLY	CONTROLS (NOTE 1)	DRIVE PACKAGE		REFRIGERANT CIRCUIT OPTIONS	CONDENSER & WATER CIRCUIT OPTIONS (NOTE 3)	RETURN & FILTER OPTION (NOTE 2)	SUPPLY (NOTE 2)	STANDARD OR SPECIAL

LARGE VERITCAL UNIT
(NOM CAPACITY 360 MBH AND GREATER)

360
480
600
720

A = CURRENT

F = 460V/3PH/60HZ
H = 208-230V/3PH/60HZ
N = 575V/3PH/60HZ
U = 380-420V/3PH/50HZ

S = CAV + CCM (W/O MCS CONTROLLER)
V = VAV + MCS CONTROLLER
D = DXM CONTROLLER

00 THRU 42 PER PAGE 2

S = STANDARD
H = HOT GAS REHEAT
B = HOT GAS BYPASS
C = HOT GAS REHEAT & HOT GAS BYPASS

C = CU CONDENSER
N = CU-NI CONDENSER
D = CU COND & ECONOMIZER
E = CU-NI COND & ECONOMIZER

R = REAR + FILTER 4"-30% EFF.
S = REAR + FILTER 4"-60% EFF.

R = REAR
F = FRONT

S = STD
A,B,C = SPECIAL

NOTES:

1. CAV = CONSTANT AIR VOLUME UNIT
   VAV = VARIABLE AIR VOLUME UNIT
2. FRONT = SIDE WHERE CONTORL BOX ACCESS PANEL IS LOCATED.
3. WATER IN/OUT CONNECTIONS LOCATED ON LEFT SIDE WHEN FACING FRONT

REV	DESCRIPTION	BY	PCN	DATE	APPROVED	REV	DESCRIPTION	BY	PCN	DATE	APPROVED
						X	X	XX			

MATERIAL:

CLIMATEMASTER • 7300 SW 44th OK CITY, OK 73179

TITLE: LV DECODING SHEET

DRAWN: SR	DATE: 5/17/99	DRAWING NO: 99D0002N17	
ENG: LN	DATE: 7/19/99	C.A.D. NO: 99D0002N17	
ISSUED: 99-0274	DATE: 5/17/99	SCALE: 1.00	A SHEET 1

HEAT CONTROLLER | TL BELT DRIVE

DRAWING NO: **DECODER LGV**

Z03

1 2	3	4 5 6	7	8	9	10	11	12	13 14
L G	V	084	A	3	C	3	A	C	LS

MODEL TYPE
LG = HEAT CONTROLLER LARGE COMMERCIAL

CONFIGURATION
(NOT AVAILABLE AT THIS TIME) H= HORIZONTAL (NON PAINTED)
V = VERTICAL (NON PAINTED)

UNIT SIZE
084
096
120
150
168
192
240
300
(NOT AVAILABLE AT THIS TIME) 360
} LGV ONLY

REVISION LEVEL
A = CURRENT REVISION FOR LGV

VOLTAGE
3 = 208-230/60/3
4 = 460/60/3
5 = 575/60/3

CONTROLS
C = CXM (ETL / NRTL FOR USA & CANADA)

CABINET INSULATION
3 = STANDARD RANGE

BLOWER DRIVE PACKAGE
A = STANDARD RPM & STANDARD MOTOR
B = LOW & RPM & STANDARD MOTORI
C = HIGH RPM & STANDARD MOTOR
D = STANDARD RPM & LARGE MOTOR (NOT AVAILABLE FOR 240)
E = HIGH RPM & LARGE MOTOR

HEAT EXCHANGER OPTIONS
C = COPPER WATER w/ NON-COATED AIR COIL
N =CUPRO-NICKEL WATER COIL w/ NON COATED AIR COIL

AIR FLOW OPTIONS
LS = LEFT RETURN / STRAIGHT SUPPLY (LGH ONLY)
BF = BACK RETURN / FRONT SUPPLY (LGV084-360)
BT = BACK RETURN /TOP SUPPLY (LGV084 - 360)
FB = FRONT RETURN / BACK SUPPLY (LGV084-360)
FT = FRONT RETURN / TOP SUPPLY (LGV084 - 360)
VS = LEFT RETURN / STRAIGHT SUPPLY, S.S DRAIN PAN (LGH ONLY)
YF = BACK RETURN / FRONT SUPPLY, S.S DRAIN PAN (LGV084 - 360)
YT = BACK RETURN / TOP SUPPLY, S.S DRAIN PAN (LGV084 - 360)
ZB = FRONT RETURN / BACK SUPPLY, S.S DRAIN PAN (LGV084 - 360)
ZT = FRONT RETURN / TOP SUPPLY, S.S DRAIN PAN (LGV084 - 360)

NOTES:
1. All Units come standard with 75 VA Transformer.

REV	DESCRIPTION	BY	PCN	DATE	APPROVED
-	- -	--	-- - ----	- -/- -/- -	- -
-	- -	--	-- - ----	- -/- -/- -	- -
-	- -	--	-- - ----	- -/- -/- -	- -
-	- -	--	-- - ----	- -/- -/- -	- -
-	- -	--	-- - ----	- -/- -/- -	- -
-	INITIAL RELEASE	TM	09-0020	1/21/09	TN

CLIMATEMASTER®
7300SW44th
OKLA.CITY,OK73179

DESCRIPTION: Decoder LGV

DRAWN:	TM	DATE:	01/21/09	ENG:	TN	DATE:	01/21/09
ISSUED:	09-0020	DATE:	01/21/09	DWG #:	Decoder LGV	A	SHEET 1-1

DRAWING NO:

Decoder LV Series

NRA

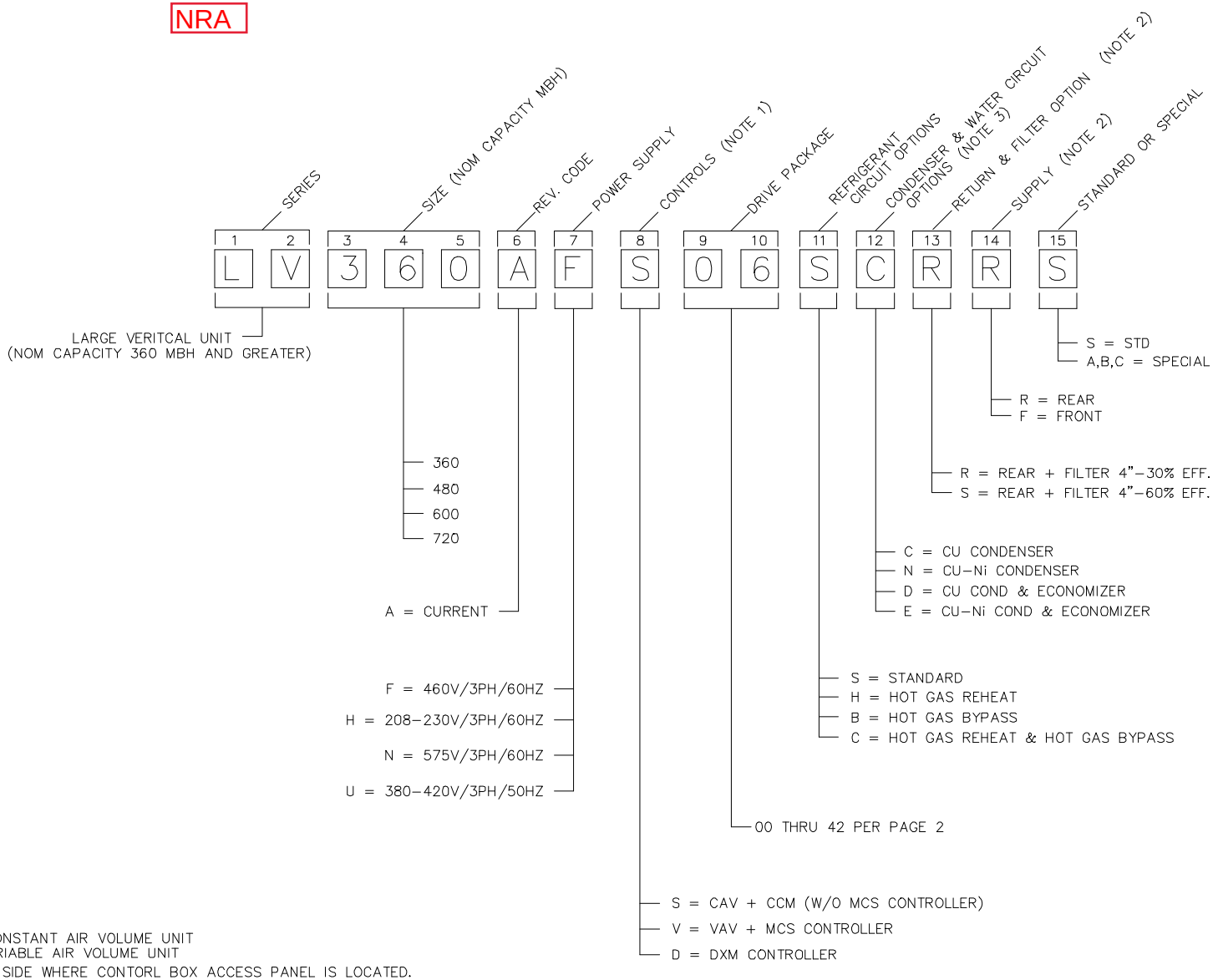

NOTES:

1. CAV = CONSTANT AIR VOLUME UNIT
   VAV = VARIABLE AIR VOLUME UNIT
2. FRONT = SIDE WHERE CONTORL BOX ACCESS PANEL IS LOCATED.
3. WATER IN/OUT CONNECTIONS LOCATED ON LEFT SIDE WHEN FACING FRONT

REV	DESCRIPTION	BY	PCN	DATE	APPROVED
–	–	–			
–	–	–			
–	–	–			
–	–	–			
–	–	–			
–	–	–			

CLIMATEMASTER®
7300 SW 44th
OKLA. CITY, OK 73179

DRAWING NO: Decoder LV Series

DRAWN: JK	DATE: 6/30/00	ENG:	DATE:
ISSUED: 000347	DATE: 6/23/00		A SHEET 1-2

1	2	3	4	5	6	7	8	9	10	11	12	13	14	15
M	C	2	0	3	0	A	A	F	A	C	0	0	S	S

MODEL TYPE
MC = MODULAR WATER-COOLED CHILLER
MH = MODULAR W/C CHILLER, HIGH TEMP.

CONFIGURATION
2 = TWO CIRCUITS

UNIT SIZE
025 - 25 TON *
030 - 30 TON
050 - 50 TON
065 - 65 TON

REVISION LEVEL
A = CURRENT

WATER X WATER

TMW LARGE

VOLTAGE & REFRIGERANT
A = 208-230/60/3, R-407C
B= 460/60/3, R-407C
C = 575/60/3, R-407C
D = 380/50/3, R-407C
F = 460/60/3, R-22
H = 208-230/60/3, R-22
N = 575/60/3, R-22
U = 380/50/3, R-22
J = 208-230/60/3, R-410A *
K= 460/60/3, R-410A *
L = 575/60/3, R-410A *
M = 380/50/3, R-410A *

FEATURE TYPE
F = FLEX
V = VALUE (MC ONLY)
E = ELITE *

CONTROLS
A = 24/60/1, STANDARD
B = 120/60/1, STANDARD ***
C = 230/60/1, STANDARD ***
D = 24/60/1, MICRO-BASED, FULL
E = 120/60/1, MICRO-BASED, FULL ***
F = 230/60/1, MICRO-BASED, FULL ***
G = 24/60/1, MICRO-BASED, LIMITED
H = 120/60/1, MICRO-BASED, LIMITED ***
J = 230/60/1, MICRO-BASED, LIMITED ***

HEAT EXCHANGER FLOW SCHEME
C = COUNTERFLOW FOR EVAP. HX & COUNTERFLOW FOR COND. HX
U = UNIFLOW FOR EVAP. HX & COUNTERFLOW FOR COND. HX
D = COUNTERFLOW FOR EVAP. HX & UNIFLOW FOR COND. HX
N = UNIFLOW FOR EVAP. HX & UNIFLOW FOR COND. HX

SYSTEM UNLOADING TYPE
0 = NO HOT GAS BYPASS UNLOADING ON EITHER COMPRESSOR STAGE
1 = HOT GAS / LIQ. INJ. AFTER EVAP. ON FRONT COMPRESSOR ONLY (STAGE #1)

WATER VALVE OPTIONS
0 = EVAP. HAND VALVES & COND. HAND VALVES
1 = EVAP. MOTORIZED VALVES & COND. HAND VALVES
2 = EVAP. HAND VALVES & COND. MOTORIZED VALVES
3 = EVAP. MOTORIZED VALVES & COND. MOTORIZED VALVES
4 = NO EVAP. VALVES & NO COND. VALVES
5 = EVAP. MOTORIZED VALVES & 3-WAY COND. BYPASS VALVE **
6 = EVAP. MOTORIZED VALVE & 2-WAY COND. REGULATING VALVE **
7 = EVAP. HAND VALVES & 3-WAY COND. BYPASS. VALVE **
8 = EVAP. HAND VALVES & 2-WAY COND. REGULATING VALVE **

COMPRESSOR SOUND ENCLOSURE
S = WITH COMPRESSOR SOUND ENCLOSURE
N = NO COMPRESSOR SOUND ENCLOSURE

MODEL CONFIGURATION
S = STANDARD
X = SPECIAL OPTIONS, DEFINE

NOTES: * FUTURE MODEL
** ALL CONDENSER REGULATION VALVES ARE TEMPERATURE ACTUATED TO CONTROL LEAVING CONDENSER WATER TEMP.
*** SPECIAL CONFIGURATION

REV	DESCRIPTION	BY	PCN	DATE	APPROVED
B	REVISED SYSTEM UNLOADING TYPES TO INCLUDE HOT GAS / LIQ. INJ. AFTER EVAP. ON FRONT COMPRESSOR ONLY	MK	06-0368	6/1/2006	MK
A	UPDATE TO CURRENT STANDARD	TM	06-0096	3/6/2006	MK
--	INITIAL RELEASE	TM	05-0291	9/7/2005	LN

ClimaCool Corp.

This document is the sole property of ClimaCool Corp. Distribution of this document is forbidden without the written consent of ClimaCool Corp. Design changes to any portion of this document may occur without notice.

Decoder - MC2 / MH2

Modular Water-Cooled Chiller

SIZE	File No.	Dwg. No.	REV
A	Decoder-MC2-MH2-revB.xls	Decoder-MC2-MH2	B
SCALE None	DATE 03/8/2005	SHEET 1 OF 1	

CLASS CODE: Z71

Split System condenser

TEP, TES

DRAWING NO: 69 3

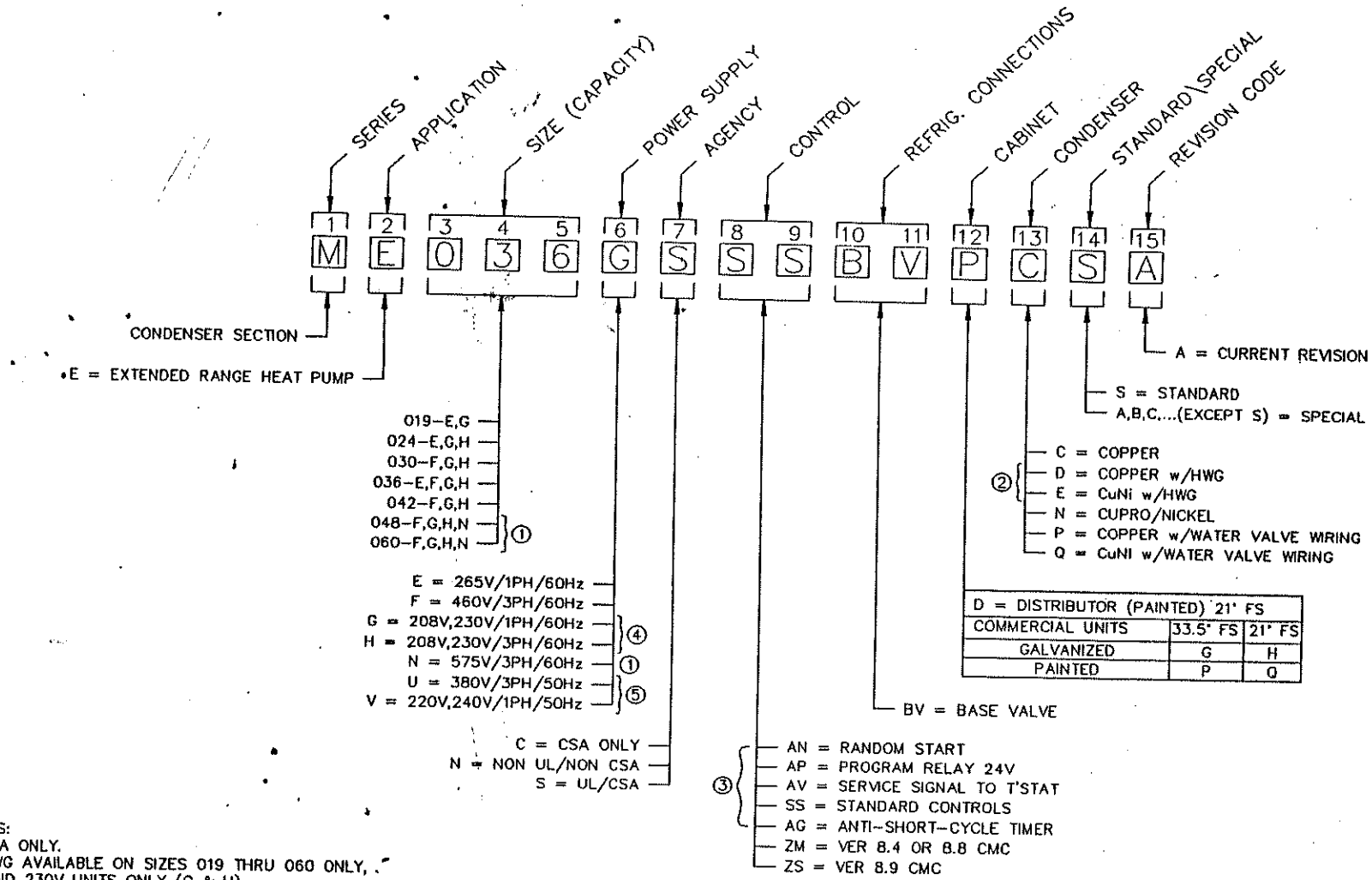

D = DISTRIBUTOR (PAINTED) 21" FS		
COMMERCIAL UNITS	33.5" FS	21" FS
GALVANIZED	G	H
PAINTED	P	Q

NOTES:
1. CSA ONLY.
2. HWG AVAILABLE ON SIZES 019 THRU 060 ONLY, AND 230V UNITS ONLY (G & H).
3. DISTRIBUTOR UNITS COME STANDARD WITH ANTI–SHORT CYCLE TIMER AND SERVICE SIGNAL TO TSTAT.
4. DISTRIBUTOR UNITS ARE WIRED FOR 230V POWER. COMMERCIAL UNITS ARE WIRED FOR 208V POWER.
5. NON UL/CSA.

E	CONTROL OPTION ZM WAS VER. 8.4 ONLY	RSS	U10736	1/11/96	ZMP
D	ADDED ZM AND ZS TO DIGIT 8,9	JFK	U10627	11/09/95	BM
C	ADDED CLASS CODE, & U & V TO DIGIT 6 & REVISED DIGIT 12	TW	U10194	2-1-95	BM
B	CHANGED NOTE SYMBOLS TO NUMBERS, ADDED NOTE 3	JMT	U9360	9/8/93	JN
A	REMOVED UNIT SIZE 015,072,096 & 120 FROM DECODER	KR	U8881	10/21/92	JN

UNLESS SPECIFIED OTHERWISE DIMENSIONS ARE IN INCHES TOLERANCES ON DECIMALS ± 0.01 ANGLES ± 1°

MATERIAL:

ClimateMaster 7300 SW 44th OKLA. CITY, OK 73179

TITLE: CONDENSER SECTION DECODING
EXTENDED RANGE LOW TEMPERATURE
25T – 110T

DRAWN: AP	DATE: 12/12/91	DRAWING NO:	69169103
CHKD: JN	DATE: 5/6/92	C.A.D. NO:	69169103

ASS CODE: Z78

DOAS TOH, TOV

DRAWING NO: 69 4

1	2	3	4	5	6	7	8	9	10	11	12	13	14	15
TYPE	APPLICATION	SIZE (CAPACITY)			POWER SUPPLY	HEAT RECOVERY	COIL	CONTROL	FILTERS	AIR FLOW CONFIG.	BLOWER DRIVE PKG.	CORROSION	CONDENSER	STANDARD\SPECIAL	REVISION CODE
M	H	0	5	2	F	S	S	S	F	A	P	C	S	A

MAKEUP AIR UNIT

H=HORZ (INDOOR)
V= VERT (INDOOR)

052-F,G,H,U
094-F,G,H,U
122-F,G,H,N,U
180-F,G,H,N,U
220-F,G,H,N,U
240-F,G,H,N,U
260-F,G,H,N,U

F = 460V/3PH/60Hz
G = 208V/1PH/60Hz
H = 208V/3PH/60Hz
N = 575V/3PH/60Hz
U = 380V/3PH/50Hz

S = NONE
= EXHAUST HEAT RECOVERY COAXIAL HEAT EXCHANGER AND UNIT MOUNTED PUMP.

S= STANDARD JOHNSON A350 WITH CMC BOARD. CMC BOARD TO ACT AS LOCKOUT RELAY WITH FAULT LIGHTS, ANTI SHORT CYCLE, NSB DEVICE, EMERGENCY SHUTDOWN DEVICE, UNIT MOUNTED SENSOR

= STANDARD JOHNSON A350 WITH CMC BOARD. CMC BOARD TO ACT AS LOCKOUT RELAY WITH FAULT LIGHTS, ANTI SHORT CYCLE, NSB DEVICE, EMERGENCY SHUTDOWN DEVICE, REMOTE MOUTNED SENSORS

D= STANDARD JOHNSON METASYS CONTROLLER. UNIT MOUNTED SENSORS

E= STANDARD JOHNSON METASYS CONTROLLER. REMOTE MOUNTED SENSORS

S = 2" FIBERGLASS
P = 2" 30% PLEATED
C = 2" CLIMAKLEEN
T = 4" CLIMAKLEEN
D = 4" 30% PLEATED
M = 4" 65% PLEATED

T = MV ONLY TOP DISCHARGE, BACK RETURN
F = MV ONLY FRONT DISCHARGE, BACK RETURN
S = MH ONLY STRAIGHT DISCHARGE, BACK RETURN
U = MH ONLY UP DISCHARGE, BACK RETURN
D = MH ONLY DOWN DISCHARGE, BACK RETURN

A = CURRENT REVISION

S = STANDARD
A,B,C... = SPECIALS

C = COPPER
N = CUPRO-NICKEL

S= STANDARD 1000 HOUR SALT SPRAY PROTECTIVE COATING ON COIL, WHEEL FAN HOUSINGS, SHAFTS AND BEARINGS
A= STANDARD 3000 HOUR SALT SPRAY PROTECTIVE COATING ON COIL, WHEEL, FAN HOUSINGS, SHAFTS AND BEARINGS
C= COPPER AIR COIL AND COPPER FINS, 1000 HOUR SALT SPRAY PROTECTIVE COATING ON, WHEEL, FAN HOUSINGS, SHAFTS AND BEARINGS

A
B
C
D
E
R = DRIVE PACKAGE 'A' (HIGH EFFICIENCY)
S = DRIVE PACKAGE 'B' (HIGH EFFICIENCY)
T = DRIVE PACKAGE 'C' (HIGH EFFICIENCY) (3)
U = DRIVE PACKAGE 'D' (HIGH EFFICIENCY)
W = DRIVE PACKAGE 'E' (HIGH EFFICIENCY)

NOTES:
1. ALL 60HZ UNITS AGENCY LISTED FOR BOTH U.S. AND CANADIAN MARKETS. 50HZ UNITS AND SPECIALS ARE NOT AGENCY APPROVED, EXCEPT BY REQUEST.
(3) 3. NOT AVAILABLE AT THIS TIME.
4. ALL UNITS TO BE PAINTED POLAR ICE.

DESCRIPTION	BY	PCN	DATE	APPROVED	REV	DESCRIPTION	BY	PCN	DATE	APPROVED
					A	CHANGED SIZE	DBM	U11076	06/17/96	

UNLESS SPECIFIED DIMENSIONS ARE IN INCHES TOLERANCES ARE DECIMALS = ±.03 ANGLES = ±1°

MATERIAL:

ClimateMaster 7300 SW 44th OKLA. CITY, OK 73179

TITLE: DECODER MAKEUP AIR UNITS

DRAWN: JFK DATE: 11/10/95 DRAWING NO: 69160144
CHG: DATE: 6/17/96 CAD NO: 69
ISSUED: U10627 DATE: 11/09/95 SCALE: .80 1

TC LARGE

DRAWING NO:

Decoder NC Large Capacity 60Hz

Z2H

1 2	3	4 5 6	7	8	9	10	11	12	13 14	15
NC	H	096	A	H	C	3	A	C	LS	S

S = STANDARD

MODEL TYPE
NC = INTENSITY COMPACT COMMERCIAL R410A

CONFIGURATION
H = HORIZONTAL
V = VERTICAL

UNIT SIZE
072
096
120
160
192
240
300
(160, 192, 240, 300: VERTICAL ONLY)

REVISION LEVEL
A = CURRENT REVISION

VOLTAGE
(2) H = 208-230/60/3 (FACTORY WIRED 208)

(1) **CONTROLS**
C = CXM

CABINET INSULATION / FILTER RAILS/FRAMES (3)
3 = STANDARD RANGE WITH 1" FILTER

BLOWER DRIVE PACKAGE
A = STANDARD RPM & STANDARD MOTOR

HEAT EXCHANGER OPTIONS
C = COPPER (CU) WATER COIL AND COPPER (CU)AIR COIL

AIR FLOW OPTIONS
NCH ONLY { LS = LEFT RETURN/STRAIGHT DISCHARGE
NCV ONLY { FT = FRONT RETURN/TOP DISCHARGE

NOTES:
1. All units come standard with 75VA transformer.
2. 208-230 Volt units wired for 208 Volt service
3. Horizontal Units come standard with Filter Rails.
   Vertical Units come standard with Filter Frames.
4. Not Currently available.

REV	DESCRIPTION	BY	PCN	DATE	APPROVED
-	INITIAL RELEASE	TM	17-0170	4/24/17	MP

CLIMATEMASTER®
7300SW44th
OKLA.CITY,OK73179

DESCRIPTION: Decoder NC Large Capacity 60Hz

DRAWN:	DATE:	ENG:	DATE:
TM	7/15/10	MP	7/15/10

ISSUED:	DATE:	DWG #	SHEET
10-0333	7/15/10	Decoder NC Large Capacity 60Hz	1 - 1

DRAWINGNO:

Decoder NC

Z2G

1 2	3	4 5 6	7	8	9	10	11	12	13	14	15
NC	H	036	A	G	C	3	0	C	L	B	S

MODEL TYPE
NC -INTENSITY COMPACT R410A

CONFIGURATION
H = HORIZONTAL

UNIT SIZE
006
009
012
015
018
024
030
036
042
048
060

REVISION LEVEL
A = CURRENT REVISION FOR ALL SIZES

VOLTAGE
G = 208-230/60/1
H = 208-230/60/3

CONTROLS
C = CXM

CABINET INSULATION
3 = STANDARD RANGE WITH 1" FILTER RAIL

FUTURE USE
0 = NONE

HEAT EXCHANGER OPTIONS
C = COPPER (CU) WATER COIL AND COPPER (CU) AIR COIL

RETURN AIR OPTIONS
L = LEFT RETURN
R = RIGHT RETURN

SUPPLY AIR OPTIONS

Option	Supply	Configuration	Motor
B	Back	TCH	PSC
S	Straight	TCH	PSC

S = STANDARD

REV	DESCRIPTION	BY	PCN	DATE	APPROVED
-	INITIAL RELEASE	TM	17-0170	4/24/17	MP

CLIMATEMASTER®
7300SW44th
OKLA.CITY,OK73179

DESCRIPTION: Decoder NC

DRAWN:	DATE:	ENG:	DATE:
TM	04/24/17	MP	04/24/17

ISSUED:	DATE:	DWG #:		SHEET
17-0170	04/24/17	Decoder NC	-	1-1

DRAWING NO:

Decoder NR

Z2D

1 2	3	4 5 6	7	8	9	10	11	12	13	14	15
NR	H	036	A	G	C	3	0	C	L	B	S

MODEL TYPE
NR = INTENSITY HIGH EFFICIENCY 410A

CONFIGURATION
H = HORIZONTAL

UNIT SIZE
006
009
012
015
018
024
030
036
042
048
060

REVISION LEVEL
A = CURRENT REVISION

VOLTAGE
G = 208-230/60/1
H = 208-230/60/3

CONTROLS
C = CXM

CABINET INSULATION
3 = STANDARD RANGE WITH 1" FILTER RAIL

WATER CIRCUIT OPTIONS
0 = None

HEAT EXCHANGER OPTIONS
C = COPPER (CU) WATER COIL AND COPPER (CU) AIR COIL

RETURN AIR OPTIONS
L = LEFT RETURN

SUPPLY AIR OPTIONS

Option	Supply	Configuration	Motor
B	Back	TRH	PSC
S	Straight	TRH	PSC

S = STANDARD

REV	DESCRIPTION	BY	P.C.N.	DATE	APPROVED
-	-	--	-----	--/--/----	--
-	-	--	-----	--/--/----	--
-	-	--	------	--/--/----	--
-	-	-	-----	--/--/----	--
-	-	--	-----	--/--/--	--
-	INITIAL RELEASE	TM	17-0170	04/24/17	MP

CLIMATEMASTER®
7300SW44th
OKLA.CITY,OK73179

DESCRIPTION: Decoder NR

DRAWN: TM	DATE: 4/24/17	ENG: MP	DATE: 4/24/17
ISSUED: 17-0170	DATE: 4/24/17	DWG #: Decoder NR -	SHEET 1-1

DRAWING NO:

Decoder NR

Z2D

1 2	3	4 5 6	7	8	9	10	11	12	13	14	15
NR	H	036	A	G	C	3	0	C	L	B	S

MODEL TYPE
NR = INTENSITY HIGH EFFICIENCY 410A

CONFIGURATION
H = HORIZONTAL

UNIT SIZE
006
009
012
015
018
024
030
036
042
048
060

REVISION LEVEL
A = CURRENT REVISION

VOLTAGE
G = 208-230/60/1
H = 208-230/60/3

CONTROLS
C = CXM

CABINET INSULATION
3 = STANDARD RANGE WITH 1" FILTER RAIL

WATER CIRCUIT OPTIONS
0 = None

HEAT EXCHANGER OPTIONS
C = COPPER (CU) WATER COIL AND COPPER (CU) AIR COIL

RETURN AIR OPTIONS
L = LEFT RETURN

SUPPLY AIR OPTIONS

Option	Supply	Configuration	Motor
B	Back	TRH	PSC
S	Straight	TRH	PSC

S = STANDARD

REV	DESCRIPTION	BY	P.C.N.	DATE	APPROVED
-	-	--	-----	--/--/----	--
-	-	--	-----	--/--/----	--
-	-	--	------	--/--/----	--
-	-	-	-----	--/--/----	--
-	-	--	-----	--/--/--	--
-	INITIAL RELEASE	TM	17-0170	04/24/17	MP

CLIMATEMASTER®
7300SW44th
OKLA.CITY,OK73179

DESCRIPTION: Decoder NR

DRAWN: TM	DATE: 4/24/17	ENG: MP	DATE: 4/24/17
ISSUED: 17-0170	DATE: 4/24/17	DWG #: Decoder NR -	SHEET 1-1

DRAWINGNO:

Decoder PDW

Z67

1 2	3	4 5	6	7	8	9	10	11	12
P D	W	3 6	G	A	A	D	C	S	B

MODEL TYPE
PARADIGM SERIES (R22)

APPLICATION
W = WEATHER PROOF

UNIT SIZE
018
024
030
036
042
048
060

VOLTAGE
G = 208-230/60/1 - R22
(2) { F = 460/60/3 - R22
U = 380-420/50/1 - R22

FUTURE USE

FUTURE USE

MARKET
(1) D = DISTRIBUTOR

CONDENSER
C = COPPER
N =CUPRO-NICKEL

STANDARD/SPECIAL
S = STANDARD
A,B,C...(EXCEPT S) = SPECIAL1,2,3 etc...

REVISION LEVEL
B = CURRENT REVISION (CXM CONTROLLER)
FOR PREVIOUS REVISION SEE 69169147

NOTES:
1. DISTRIBUTOR IS STANDARD WITH CXM CONTROLS AND HWG SERVICE VALVES.
HWG AND FLOW CONTROLLER SOLD AS FIELD INSTALLED KITS.
2. "F" AND "U" VOLTAGE MUST BE UNIT SIZES 36, 42, 48, or 60 ONLY.
"G" VOLTAGE APPLIES TO ALL SIZES.

REV	DESCRIPTION	BY	PCN	DATE	APPROVED
-	- -	--	-- - ----	- -/- -/- -	- -
-	- -	--	-- - ----	- -/- -/- -	- -
-	- -	--	-- - ----	- -/- -/- -	- -
-	--	--	-- - ----	- -/- -/- -	- -
-	--	--	-- - ----	- -/- -/- -	- -
A	CONVERTED TO FREEHAND FORMAT.	TM	09-0018	01/20/09	JT

CLIMATEMASTER®
7300SW44th
OKLA.CITY,OK73179

DESCRIPTION: Decoder PDW

DRAWN: JK	DATE: 6/30/00	ENG:	DATE:
ISSUED: 000347	DATE: 6/30/00	DWG #: Decoder PDW	A SHEET 1-1

DRAW 69169147

FEB 18 1997

OUTDOOR SPLIT | TEP

FEB 18 1997

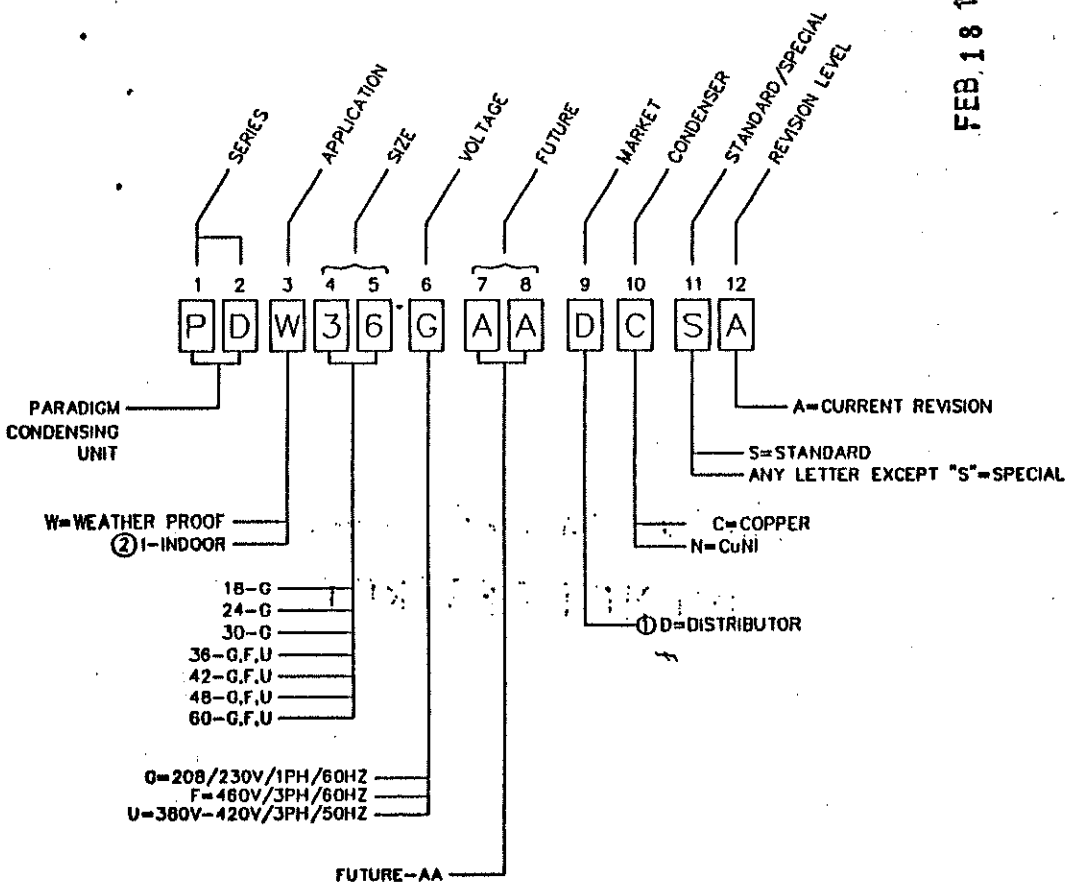

1. DISTRIBUTOR IS STANDARD WITH ELETRO-MECH. CONTROLS AND HWG SERVICE VALVES: HWG AND FLOW CONTROLLER SOLD AS FIELD INSTALLED KITS
2. NOT AVAILABLE

DRAWING NO: 6[illegible]13

CLASS CODES:
PTA = W10
PTP = W30

PTAC NRA

1	2	3	4	5	6	7	8	9	10	11	12	13	14	15
SERIES		TYPE	NOMINAL CAPACITY		VOLTAGE	ELECTRIC HEAT	CONTROL	FRESH AIR DAMPER	RETURN AIR	CONSTRUCTION	POWER CONNECTION	SHIPPING/PACKAGING	STANDARD/SPECIAL	REVISION CODE
P	T	A	0	7	G	N	A	M	B	C	C	1	S	A

PACKAGED TERMIAL UNIT

A = AIR CONDITIONER
P = HEAT PUMP

07 = 7000 BTUH
09 = 9000 BTUH
12 = 12000 BTUH
15 = 15000 BTUH

A = 115V/1PH/60Hz ④
B = 208V/1PH/60Hz
C = 230V/1PH/60Hz
E = 265V/1PH/60Hz ⑦
G = 208/230V/1PH/60Hz
V = 220V,240V/1PH/50Hz
X = SPECIAL #

A = OBSOLETE
*** B= REV 10/13/95 07-15, TUBING CHANGES & AIR SEALS
*** C= SIZE 07 ONLY; TECUMSEH COMPRESSOR REPLACES PANASONIC
*** D= REV 8/20/96, VALLEY ELECTRIC HEATERS REPLACE TUTCO
S = STANDARD
A,B,C,...(EXCEPT S) = SPECIAL

1 = CHASSIS ONLY
2 = CHASSIS & FRONT RETURN ROOM CABINET
3 = CHASSIS & BOTTOM RETURN ROOM CABINET
4 = CHASSIS,FRONT RETURN ROOM CABINET & NON-INSULATED WALL SLEEVE
5 = CHASSIS,BOTTOM RETURN ROOM CABINET & NON-INSULATED WALL SLEEVE
6 = CHASSIS,FRONT RETURN ROOM CABINET & INSULATED WALL SLEEVE
7 = CHASSIS,BOTTOM RETURN ROOM CABINET & INSULATED WALL SLEEVE
NOTE: #4 THRU #7 FOR EXPORT ONLY

C = CORD CONNECTED (MINIMUM SIZE AS REQUIRED BY UNIT LOAD)
L = LINE CORD SUPPLIED BY OTHERS
P = PERMANENTLY CONNECTED
* 1 = 20AMP/125V CORD
** 2 = 20AMP/250V CORD
} NOT AVAILABLE IF DIGIT #7 IS "3", "6" OR "7".

C = STANDARD CONSTRUCTION
R = SEACOAST/ CORROSION RESISTANT
# X = SPECIAL
D = REHEAT DEHUMIDIFIER OPTION
E = R PLUS D

⑥ A = ADJOINING ROOM (BOTTOM RETURN)
B = BOTTOM
F = FRONT
# X = SPECIAL

E = ELECTRIC
M = MANUAL
# X = SPECIAL

A = MCO
B = MCO w/24V N.C. PROGRAM RELAY
C = MCO w/NIGHT LOW-LIMIT THERMOSTAT
D = MCO w/24V N.C. PROGRAM RELAY & NIGHT LOW-LIMIT THERMOSTAT
⑨ E = 24V WALL THERMOSTAT
F = ACO
G = ACO w/24V N.C. PROGRAM RELAY
H = ACO w/NIGHT LOW-LIMIT THERMOSTAT
J = ACO w/24V N.C. PROGRAM RELAY & NIGHT LOW-LIMIT THERMOSTAT

NOTES:
1. SIZE 12 & 15 ONLY.
① DIGIT #12 MUST BE "C" OR "P".
②2. DIGIT #6 MUST BE "B".
③3. IF SERIES "PTA" REQUIRES STANDBY, HI, LO, FAN PUSHBUTTON SWITCH & DECO LABEL SAME AS THAT USED FOR CONTROLS "F", "G", "H" & "J".
IF SERIES "PTP" USE PUSH-BUTTON SWITCH & DECO LABEL SAME AS "A", "B", "C" & "D".
OMIT ELECTRIC HEATER, HI LIMIT SWITCH, CHANGE OVER TSTAT(s)/EMERGENCY HEAT SWITCH AND USE A SINGLE STAGE TSTAT.

	ELECTRIC HEAT/kW		
OPTION	208/230V	208V	265V
N ③	NONE	- - -	NONE
1	2.1/2.5	- - -	- - -
2	2.8/3.4	- - -	- - -
3	3.9/4.8 ①	- - -	- - -
4	- - -	- - -	2.5
5	- - -	- - -	3.4
6	- - -	- - -	4.8 ①
7 ⑧	- - -	4.6 ①③	- - -

④4. DIGIT #7 MUST BE "N" & NOT AVAILABLE IN SIZE 15
⑤5. REQUIRES JOB SITE VOLTAGE BE SPECIFIED FOR 24V PRIMARY WIRING.
IF 208V, DIGIT #6 MUST BE "B".
IF 230V, DIGIT #6 MUST BE "C".
IF DIGIT #6 = "V", WIRE SAME AS IF IT WERE "C".
⑨6. SIZE 12 & 15 ONLY. DIGIT #13 MUST BE "1".
⑦7. DIGIT 12 MUST BE "P".
8. STANDARD UNITS ARE UL/CSA LISTED. (REV A&B) OR CSA/NRTL (REV C,D & UP)
SPECIALS ARE NOT AGENCY APPROVED.
9. NOT CURRENTLY AVAILABLE.
= NON-UL, NON-CSA LISTED (EXCEPT BY SPECIAL ORDER)
* = DIGIT #6 MUST BE "A". SIZE 07 & 09 ONLY.
** = DIGIT #6 MUST BE "G" OR "V".
*** = SEE SHEET 2 FOR CURRENT REVISION

H	"& NOT AVAILABLE..." & "(REV A & B)"... TO NOTE 5, 8, & ADDED NOTE 9	JMC	97-0373	11/07/97				
	REVISED & RETRACED DWG FROM REV H, ADDED							

UNLESS SPECIFIED OTHERWISE DIMENSIONS ARE IN INCHES TOLERANCES ON: DECIMALS ± .031 ANGLES ± 1/2°

MATERIAL:

ClimateMaster 7300 SW 44th OKLA. CITY, OK 73179

TITLE: DECODER
PACKAGED TERMINAL UNIT

DRAWN: ML	DATE: 7-30-92	DRAWING NO: 69169113	
ENG: RL	DATE: 7-31-92	CAD NO: 69169113	
ISSUED: 118714	DATE: 07/10/92	SCALE: NONE	

CLASS CODE: W20

PTAC NRA

1	2	3	4	5	6	7	8	9	10	11	12	13	14	15
SERIES		TYPE	NOMINAL CAPACITY		VOLTAGE	HYDRONIC HEAT	CONTROL	FRESH AIR DAMPER	RETURN AIR	CONSTRUCTION	POWER CONNECTION	SHIPPING/PACKAGING	STANDARD/SPECIAL	REVISION CODE
P	T	H	0	7	G	H	A	M	B	C	B	1	S	A

PACKAGED TERMIAL UNIT

H = AIR CONDITIONER w/HYDRONIC HEATING #

07 = 7000 BTUH
09 = 9000 BTUH
12 = 12000 BTUH
15 = 15000 BTUH

A = 115V/1PH/60Hz ③
B = 208V/1PH/60Hz
C = 230V/1PH/60Hz
E = 265V/1PH/60Hz ③
G = 208V,230V/1PH/60Hz
V = 220V,240V/1PH/50Hz
X = SPECIAL #

A = HOT WATER w/AQUASTAT
H = HOT WATER
S = STEAM
T = STEAM w/THERMAL STAT

A = MCO
B = MCO w/24V N.C. PROGRAM RELAY
C = MCO w/TEMPERATURE SET-BACK THERMOSTAT
D = MCO w/24V N.C. PROGRAM RELAY & TEMPERATURE SET-BACK THERMOSTAT
E = 24V WALL THERMOSTAT ①
F = ACO
G = ACO w/24V N.C. PROGRAM RELAY
H = ACO w/TEMPERATURE SET-BACK THERMOSTAT
J = ACO w/24V N.C. PROGRAM RELAY & TEMPERATURE SET-BACK THERMOSTAT
K = MCO w/115V EMERGENCY POWER

E = ELECTRIC
M = MANUAL
X = SPECIAL #

A = ADJOINING ROOM (BOTTOM RETURN) ②
F = FRONT
B = BOTTOM #
X = SPECIAL

C = STANDARD CONSTRUCTION
D = REHEAT DEHUMIDIFIER OPTION
E = R PLUS D
R = SEACOAST/CORROSION RESISTANT
X = SPECIAL

A= OBSOLETE
B= CURRENT REVISION FOR 09-012 & 15 ONLY (10/13/95)
C= CURRENT REVISION FOR 07 ONLY (7/30/96)

S = STANDARD
A,B,C,...(EXCEPT S) = SPECIAL

1 = CHASSIS ONLY
3 = CHASSIS & (42") BOTTOM RETURN ROOM CABINET
5 = CHASSIS, (42") BOTTOM RETURN ROOM CABINET & NON-INSULATED WALL SLEEVE
7 = CHASSIS, (42") BOTTOM RETURN ROOM CABINET & INSULATED WALL SLEEVE
NOTE: #5 & #7 FOR EXPORT ONLY.

X = SPECIAL
B = HYDRONIC SUBBASE CONNECTION
E = HYDRONIC SUBBASE W/EMERGENCY POWER CONNECTIONS *
L = LINE CORD SUPPLIED BY OTHERS

W/THH TOP-MOUNT HYDRONIC HEATING ASSEMBLY

C = 15A SERVICE CORD CONNECTED
P = PERMANENTLY CONNECTED
1 = 20A/125V CORD IN PLACE OF 15A/125V SERVICE CORD
2 = 20A/250V CORD IN PLACE OF 15A/250V SERVICE CORD

W/THH TOP-MOUNT HYDRONIC HEATING ASSEMBLY & EMERGENCY POWER OPTION *

3 = 15A/125V CORD & 15A/125V CORD FOR COOLING CIRCUIT (07, 09)
4 = 15A/125V CORD & 20A/125V CORD FOR COOLING CIRCUIT (12)
5 = 15A/125V CORD & 15A/250V CORD FOR COOLING CIRCUIT
6 = 20A/125V CORD & 20A/125V CORD FOR COOLING CIRCUIT
7 = 20A/125V CORD & 20A/250V CORD FOR COOLING CIRCUIT
8 = 125V & 125V OR 125V & 265V PERMANENT CONNECTIONS
9 = 125V & 250V PERMANENT CONNECTIONS

NOTES FOR DIGIT #12:

1. * CHASSIS DIGIT #8 MUST EQUAL "K".
2. "1, 2, 6 & 7" OPTIONAL, IF REQUIRED BY LOCAL CODE.
3. "P" REQUIRES PERMANENT CONNECTION KIT.
4. "8" REQUIRES (2) PERMANENT CONNECTION KITS (2) PCKWN's OR (2) PCKWD's.
5. "9" REQUIRES (2) PERMANENT CONNECTION KITS (1) PCKWN's OR (1) PCKWD's & (1) PCKBN OR (1) PCKBD.
6. DIGIT #13 MUST BE "1" IN ORDER TO USE ANY OPTIONS FOR THH.

NOTE:
① 1. REQUIRES JOB SITE VOLTAGE BE SPECIFIED FOR 24V PRIMARY WIRING.
IF 208V, DIGIT #6 MUST BE "B".
IF 230V, DIGIT #6 MUST BE "C".
IF DIGIT #6 = "V", WIRE SAME AS IF IT WERE "C".
② 2. SIZE 12 & 15 ONLY. DIGIT #13 MUST BE "1".
③ 3. DIGIT 12 MUST BE "P".
4. UNITS ARE NOT UL/CSA LISTED.
5. NOT AVAILABLE IN SIZE 15.

= NON-UL, NON-CSA LISTED

REV	DESCRIPTION	BY	PCN	DATE	APPROVED
F	ADDED NOTE 5 TO DWG	JMC	97-0373	11/07/97	BC
E	ADDED REVISION CODE C	RSS	U11398	01/02/96	EDR
D	REVISED DIGIT 11 (R) AND 15 (B) ADDED NOTE 3 AND 4	JFK	U10627	11/09/95	BM
C	ADDED (J) TO DIGIT 3; REMOVED (EXCEPT BY SPECIAL ORDER) FROM J	DR	U10243	02/28/95	BM
B	ADDED 'A' & 'T' TO HYDRONIC HEAT; ADDED "A" TO RETURN AIR; ADDED NOTE #2; ADDED "L" & NOTE #6 AT DIGIT 12	ML	U9783	5-10-94	BM
A	REVISED AND REDRAWN TO INCLUDE THH (TOP-MOUNT HYDC)	DR	U9126	03/23/93	ML

UNLESS SPECIFIED OTHERWISE DIMENSIONS ARE IN INCHES TOLERANCES ON: DECIMALS ± 0.031 ANGLES ± 0.5°

MATERIAL:

ClimateMaster 7300 SW 44th OKLA. CITY, OK 73179

TITLE: DECODER
PACKAGED TERMINAL UNIT w/HYDC HEAT

DRAWN: DR DATE: 08/13/92 DRAWING NO: 69169115
ENG: DATE: CAD NO: 69169115
ISSUED: U8738 DATE: 08/25/92 SCALE: .800 A SHEET 1

69564901

POOL UNIT NRA

PV/PH
(PDE SERIES)
PRODUCT CODING

1	2	3	4	5	6	7	8	9	10	11	12	13	14	15
SERIES	ARRANGEMENT	CAPACITY			POWER SUPPLY	AIRFLOW	AUXILIARY	HEAT EXCHANGER	CONDENSER OPTION	CONTROLS/GUAGES	FAN DRIVE	FILTER RACK	SPECIAL ORDER	REVISION CODE
P	V	1	1*	*5	F	A	K	A	A	D	A	B	0	A

P = PDE SERIES

V = VERTICAL
H = HORIZONTAL

082
115
145
165
180
230
290
350

F = 460V-3PH
G = 208V-3PH
H = 208V-3PH

A = RIGHT RETURN/TOP DISCHARGE CCW ROTATION
B = RIGHT RETURN/TOP DISCHARGE CW ROTATION
C = RIGHT RETURN/LEFT DISCHARGE CW ROTATION
D = RIGHT RETURN/LEFT DISCHARGE CCW ROTATION
E = RIGHT RETURN/BOTTOM DISCHARGE CCW ROTATION
F = RIGHT RETURN/BOTTOM DISCHARGE CW ROTATION

NOTE: RETURN/DISCHARGE/ROTATION AS VIEWED FROM MOTOR END

0 = NONE
I = STEAM COIL WITHOUT VALVE
J = HOT WATER COIL WITHOUT VALVE
K = HOT WATER COIL W/3-WAY VALVE (ON/OFF)
L = HOT WATER COIL W/3-WAY (MODULATING)
M = HOT WATER COIL W/2-WAY VALVE (ON/OFF)
N = HOT WATER COIL W/2-WAY VALVE (MODULATING)
X = SPECIAL

*A = POOL HEAT
*B = POOL + SPA HEAT
*C = POOL + DOMESTIC HOT WATER HEAT
*D = POOL HEAT (FULL CONDENSING)
*0 = NO POOL HEAT

*NOTE: PV/PH 165/230/290/350 TWO REFRIGERATION CIRCUITS WILL HAVE IDENTICAL CONFIGERATION USE "X" IF CONFIGURATION IS DIFFERENT FOR EACH CIRCUIT

0 = NO CONDENSER
A = REMOTE AIR COOLED CONDENSER SET-UP
B = WATER COOLED CONDENSOR (SHELL AND TUBE)
X = SPECIAL

A = STANDARD CONTROLS
B = STANDARD CONTROLS - STATUS LIGHTS
C = STANDARD CONTROLS - GUAGES
D = STANDARD CONTROLS - STATUS LIGHTS AND GUAGES
E = STANDARD DDC CONTROLS NCBS
X = SPECIAL

A = STANDARD MOTOR SIZE AND DRIVE
X = SPECIAL

0 = NO FILTERS
A = THROWAWAY 2'
B = PLEATED 2'
X = SPECIAL

0 = STANDARD
A,B,C... ENGINEERING ASSIGNED

A

ADDED O TO COND. OPTIONS	TN	U10917	4/23/93		
DESCRIPTION	BY	PCN	DATE	APPROVED	

ClimateMaster 7300 SW 44th OKLA CITY, OK 73179

TITLE: PRODUCT DECODING SHEET
PV/PH (PDE SERIES)

DRAWN: UK	DATE: 4/30/93	DRAWING NO: 69564901	
ENG: NERU	DATE: 4/30/93	C.A.D. NO: 69564901	
ISSUED: N/A	DATE: 4/30/93	SCALE: .100	V SHEET 1

DRAWING NO 99D0002N12

ASS CODE: Z74

ROOFTOP TRE

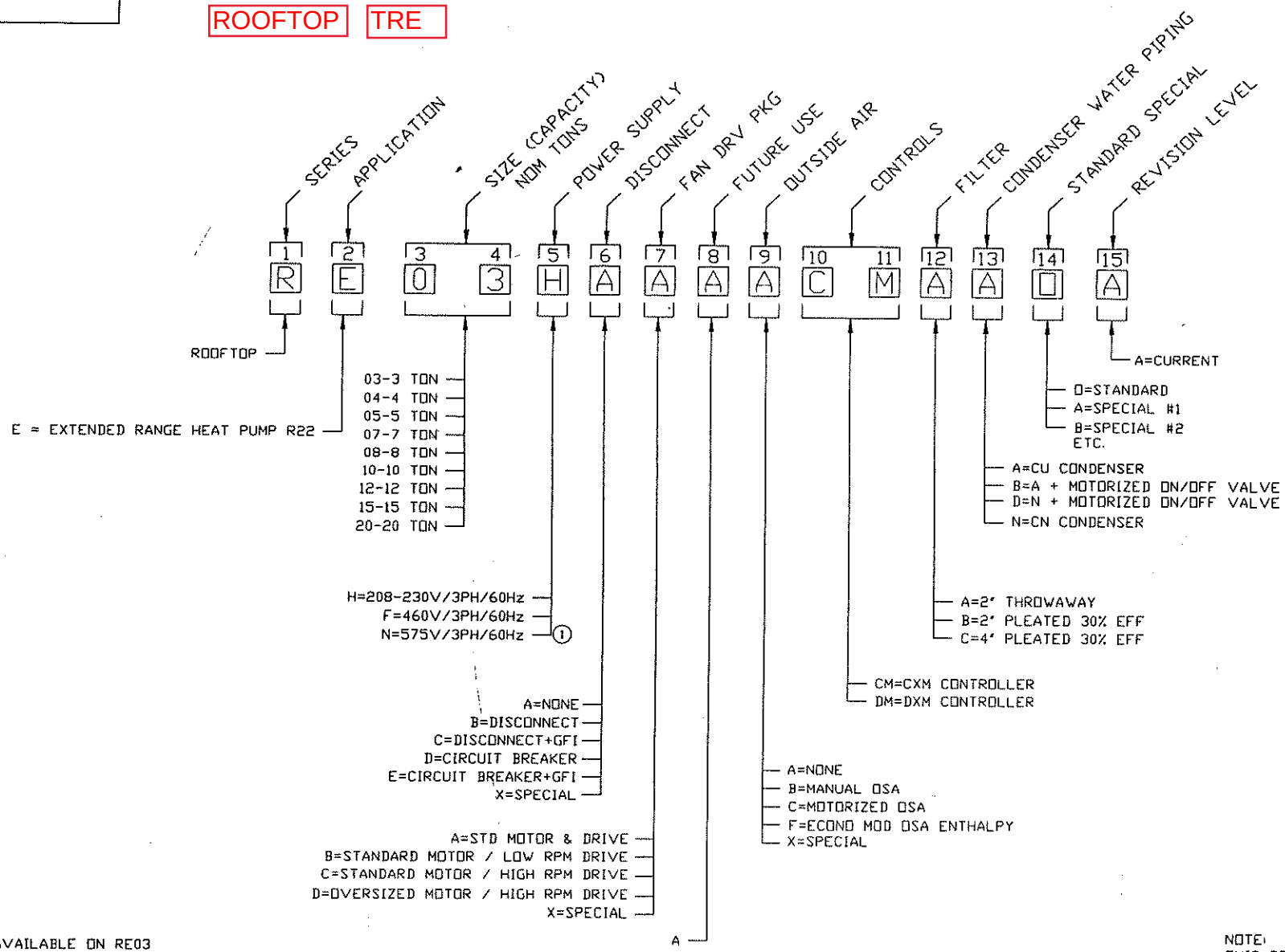

TE:
OT AVAILABLE ON RE03

NOTE:
THIS DECODER SUPERSEDES 69840800

CLASS CODE: Z74

ROOFTOP TRE

DRAWING NO. 691

DEC 10 1996

1	2	3	4	5	6	7	8	9	10	11	12	13	14	15
SERIES	APPLICATION	SIZE (CAPACITY)		POWER SUPPLY	ELECTRIC HEAT	FRESH AIR OPTION	CONTROL		FILTER	FAN DRIVE PACKAGE	CABINET	CONDENSER	STANDARD/SPECIAL	REVISION CODE
R	L	0	3	G	S	S	S	S	S	A	S	C	S	A

ROOFTOP

C = COOLING ONLY
E = EXTENDED LOW TEMPERATURE HEAT PUMP
L = LOW TEMPERATURE HEAT PUMP
W = WALMART SPECIFICATION HEAT PUMP (R407C)
③

03 ①
05
08
10
15
20

F = 460V/3PH/60Hz
G = 208V,230V/1PH/60Hz ④
H = 208V,230V/3PH/60Hz

③

OPTION	HEAT kW
A	5
B	10
C	15
D	20
E	25
F	30
S	NONE

A = 4" THROW-AWAY
B = 2" PLEATED
C = 4" PLEATED
S = 2" THROW-AWAY

SS = STANDARD (CMC CONTROLLER)
WS = NOVAR & CMC CONTROLLERS

③ A = MANUAL DAMPER (5-25%)
B = MOTORIZED DAMPER ON/OFF (0-25%)
S = NONE (0%)

REFER TO CHART @ RIGHT

A = SINGLE SKIN PANELS
S = DOUBLE SKIN PANELS

A = COPPER w/WATER VALVE
B = CUPRO-NICKEL w/WATER VALVE
C = COPPER
N = CUPRO/NICKEL

S = STANDARD
A,B,C,...(EXCEPT S) = SPECIAL

A = CURRENT REVISION

OPTION	MOTOR HP	RPM RANGE MIN	RPM RANGE MAX	
A	3/4	- - -	- - -	②
B	1.5	900	1150	⑤
C	1.5	1100	1300	③
D	2	850	1100	⑥
E	2	1050	1300	③
F	3	750	900	⑦
G	3	900	1100	⑧
H	5	850	1000	⑨
J	5	950	1100	③

NOTES:
① 1. DIGIT #11 MUST BE "A".
② 2. SIZE 03 ONLY.
③ 3. NOT AVAILABLE AT THIS TIME.
④ 4. AVAILABLE FOR SIZES 03 AND 05 ONLY.
⑤ 5. SIZE 05 ONLY
⑥ 6. SIZE 08 ONLY
⑦ 7. SIZE 15 ONLY
⑧ 8. SIZE 10 ONLY
⑨ 9. SIZE 20 ONLY

NOT TYPOGRAPHICAL ERRORS

OBSOLETE

REV	DESCRIPTION	BY	PCN	DATE	APPROVED
A	MADE OBSOLETE	TN	U11324	12/4/96	

UNLESS SPECIFIED OTHERWISE DIMENSIONS ARE IN INCHES TOLERANCES ARE: DECIMALS ± .030 ANGLES ± 1°

MATERIAL:

ClimateMaster 7300 SW 44th OKLA CITY, OK 73179

TITLE: DECODER ROOFTOP UNITS

DRAWN: ML DATE: 3-20-95 DRAWING NO. 69185701

ENG: DATE: CAD NO. 69185701

ISSUED: U10345 DATE: 5/02/95 SCALE .800 A SHEET 1

DRAWING NO: 99D0011N02

CLASS CODE: Z6A

NOTES:
1. UNITS ARE WIRED FOR 230V POWER.

1	2	3	4	5	6	7	8	9	10	11	12	13	14	15
S	D	0	3	6	G	S	S	S	L	T	D	C	S	A
SERIES		SIZE (CAPACITY)			POWER SUPPLY	AGENCY	CONTROL		AIR FLOW CONFIGURATION		CABINET	CONDENSER	STANDARD\SPECIAL	REVISION CODE

SD = GEOSTAR DUAL

030 (NOT AVAIL.)
036
042
048
060
072

G = 208V,230V/1PH/60Hz (1)

N = NON CSA/NRTL
S =CSA/NTRL

SS = STANDARD
INCLUDES: CXM CONTROLLER AND ICM CONTROL BOARD

OPTION	RETURN	DISCHARGE
LT	LEFT	TOP
RT	RIGHT	TOP

D = DISTRIBUTOR, (PAINTED)

C = COPPER
D = COPPER w/HOT WATER GENERATOR
E = CUPRO-NICKEL w/HOT WATER GENERATOR
N = CUPRO-NICKEL

S = STANDARD
A,B,C,...(EXCEPT S) = SPECIAL

A = CURRENT REVISION (EQUIVALENT TO VT REV F)

REV	DESCRIPTION	BY	PCN	DATE	APPROVED	REV	DESCRIPTION	BY	PCN	DATE	APPROVED
						X	X	XX			

UNLESS SPECIFIED OTHERWISE DIMENSIONS ARE IN INCHES, TOLERANCES ON:
DECIMALS ±.031
ANGLES ±1°

MATERIAL:

CLIMATEMASTER • 7300 SW 44th OK CITY, OK 73179

TITLE: DECODER (GEOSTAR) SD (TWO STAGE)

DRAWN: SR DATE: 5/21/99 DRAWING NO: 99D0011N02
ENG: RW DATE: 5/28/99 C.A.D. NO: 99D0011N02
ISSUED: 99-0290 DATE: 5/21/99 SCALE: 1.00 A SHEET 1

DRAWING NO: 99D0011N03

CLASS CODE: Z6A

1	2	3	4	5	6	7	8	9	10	11	12	13	14	15
SERIES		CONFIGURATION	SIZE			REVISION LEVEL	ELECTRICAL CHARACTERISTICS	CONTROLS	CABINET	HWG OPTIONS	COAX OPTIONS	RETURN	SUPPLY	STANDARD
S	T	S	0	3	6	A	G	C	0	0	C	N	N	S

GS = GEOSTAR SERIES

S = SPLIT

018
024
030
036
042
048
060

A = CURRENT
(EQUIVALENT TO GSS REV B)

G = 208-230/60/1

C = CXM CONTROLLER

0 = DISTRIBUTOR CLASS ('G' VOLT ONLY)

0 = NONE
1 = HWG W/INTERNAL PUMP ('G' VOLTAGE ONLY)

C = COPPER
N = CUPRO-NICKEL

N = NOT APPLICABLE

N = NOT APPLICABLE

S = STANDARD

REV	DESCRIPTION	BY	PCN	DATE	APPROVED	REV	DESCRIPTION	BY	PCN	DATE	APPROVED
						X	X	XX			

MATERIAL:

CLIMATEMASTER • 7300 SW 44th OK CITY, OK 73179

TITLE: GEOSTAR DECODING SHEET
ST SPLIT MODEL

DRAWN: SR	DATE: 5/21/99	DRAWING NO: 99D0011N03	
ENG: uw	DATE: 5/28/99	C.A.D. NO: 99D0011N03	
ISSUED: 99-0290	DATE: 5/21/99	SCALE: 1.00	A SHEET 1

DRAWING NO 99D0011N01

CLASS CODE: Z6A

1	2	3	4	5	6	7	8	9	10	11	12	13	14	15
SERIES		CONFIGURATION	SIZE			REVISION LEVEL	ELECTRICAL CHARACTERISTICS	CONTROLS	CABINET	HWG OPTIONS	COAX OPTIONS	RETURN	SUPPLY	STANDARD
S	T	V	0	3	6	A	G	C	0	0	C	L	T	S

ST = GEOSTAR SERIES

V = VERTICAL UP FLOW
D = VERTICAL DOWN FLOW
H = HORIZONTAL

009 (NOT AVAIL)
012 (NOT AVAIL)
015
018
024
030
036
042
048
060
070

A = CURRENT

G = 208/230/60/1

C = CXM CONTROLLER
D = DXM CONTROLLER
E = CXM WITH ICM (SIZE 024:070)

0 = DISTRIBUTOR CLASS ('G' VOLT ONLY)

0 = NONE
1 = HWG W/INTERNAL PUMP ('G' VOLT ONLY)

C = COPPER
N = CUPRO-NICKEL

L = LEFT RETURN
R = RIGHT RETURN

T = TOPFLOW [STV ONLY]
D = DOWNFLOW [STD ONLY]
B = BACK DISCHARGE
S = STRAIGHT DISCHARGE [STH ONLY]

S = STANDARD

REV	DESCRIPTION	BY	PCN	DATE	APPROVED	REV	DESCRIPTION	BY	PCN	DATE	APPROVED
						X	X	XX			

MATERIAL:

CLIMATEMASTER • 7300 SW 44th OK CITY, OK 73179

TITLE: GEOSTAR DECODING SHEET
HORIZONTAL, VERTICAL SERIES

DRAWN: SR	DATE: 5/21/99	DRAWING NO: 99D0011N01	
ENG: RW	DATE: 5/28/99	CAD NO: 99D0011N01	
ISSUED: 99-0290	DATE: 5/21/99	SCALE: 1.00	A SHEET 1

CLASS CODE: Z6A

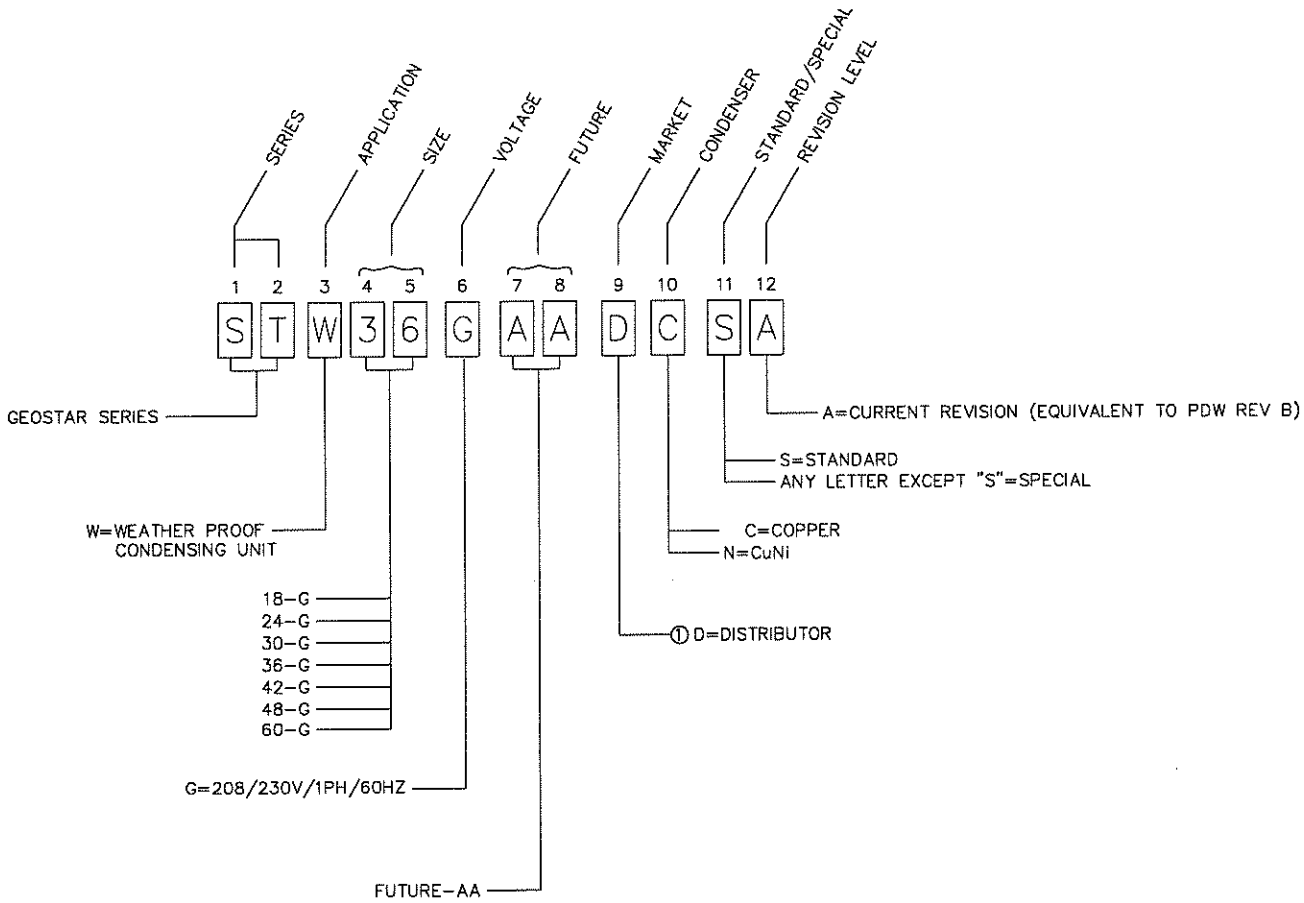

1. DISTRIBUTOR IS STANDARD WITH CXM. CONTROLS AND HWG SERVICE VALVES: HWG AND FLOW CONTROLLER SOLD AS FIELD INSTALLED KITS

REV	DESCRIPTION	BY	PCN	DATE	APPROVED	REV	DESCRIPTION	BY	PCN	DATE	APPROVED
						X	X	XX			

UNLESS SPECIFIED OTHERWISE DIMENSIONS ARE IN INCHES. TOLERANCES ON:
DECIMALS ±.031
ANGLES ±1°

MATERIAL:

CLIMATEMASTER • 7300 SW 44th OK CITY, OK 73179

TITLE: UNIT DECODER STW

DRAWN: SR DATE: 5/21/99 DRAWING NO: 99D0011N04
ENG: DATE: A.D. NO: 99D0011N04
ISSUED: 99-0290 DATE: 5/21/99 SCALE: 1.00 A SHEET 1

DRAWINGNO:
Decoder TTS

Z46

SPLIT SYSTEM CONDENSER

TES

1 2	3	4 5 6	7	8	9	10	11	12	13	14	15
TT	S	0 2 6	C	G	C	0	0	C	N	N	S

SERIES
TT = Tranquility Two Stage Scroll

CONFIGURATION
S = SPLIT (Indoor)

UNIT SIZE
026
038
049
064

REVISION LEVEL
A = Current Revision for Sizes 026-049 (Obsolete 06/17/13)
B = Current Revision for Size 064 (Obselete 06/17/13)
C = Current Revision for Sizes 026-064
K5 Compressor 06/17/13 (Effective 06/17/13)

VOLTAGE
G = 208-230/60/1

CONTROLS
C = CXM

CABINET
0 = Residential (1)
5 = Residential w/Ultra Quiet (1)

WATER CIRCUIT OPTIONS
0 = None
1 = HWG w/Internal Pump

HEAT EXCHANGER OPTIONS

	Copper	Cupro-Nickel
Standard	C	N

RETURN AIR FLOW CONFIGURATION
N = NOT APPLICABLE

SUPPLY AIR FLOW & MOTOR CONFIGURATION
N = NOT APPLICABLE

STANDARD
S = Standard

Notes:
1. Residential Units are Black with Stainless Steel front access panels.
Residential Units come standard with CXM controls,
Loop Pump & HWG Connections.

SEE SHEET 2 FOR REVISION HISTORY

CLIMATEMASTER®
7300SW44th
OKLA.CITY,OK73179

DESCRIPTION: Decoder TTS			
DRAWN: TM	DATE: 06/27/05	ENG: SH	DATE: 06/27/05
ISSUED: 04-0354	DATE: 06/27/05	DWG #: Decoder TTS	A SHEET 1-1

DRAWINGNO:

Decoder TTP

Z6B

TEP

1 2	3	4 5 6	7	8	9	10	11	12	13	14	15
TT	P	0 2 6	A	G	C	0	0	C	N	N	S

SERIES
TT = Tranquility Two Stage Scroll

CONFIGURATION
P = Protective Cabinet (Outdoor)

UNIT SIZE
026
038
049
064

REVISION LEVEL
A = Current Revision for Sizes 026-049
B = Current Revision for Size 064

VOLTAGE
G = 208-230/60/1

CONTROLS
C = CXM

CABINET
0 = Residential (1)

WATER CIRCUIT OPTIONS
0 = Single Pump for sizes (026 & 038) Only.
Double Pump for sizes (049 & 064) Only.

HEAT EXCHANGER OPTIONS

	Copper	Cupro-Nickel
Standard	C	N

FUTURE
N = NOT APPLICABLE

FUTURE
N = NOT APPLICABLE

STANDARD
S = Standard

Notes:
1. Units are to be Silver w/Black Pump access panel.
   Units come standard w/CXM controls, UP26-99 Loop Pump(s)
   w/Check Valve, Flushing Valves, P/T Ports, Expansion Tank & HWG connections.
   P/T Ports will be mounted to a threaded plug inserted into the purge valves.

SEE SHEET 2 FOR REVISION HISTORY

CLIMATEMASTER®
7300SW44th
OKLA.CITY,OK 73179

DESCRIPTION: Decoder TTP

DRAWN: DR	DATE: 04/22/09	ENG: JIM T.	DATE: 04/22/09
ISSUED: 09-0038	DATE: 04/22/09	DWG #: Decoder TTP	A SHEET 1-1

TEV, H

DRAWINGNO:

Decoder TTV, TTH Commercial

Z46

1 2	3	4 5 6	7	8	9	10	11	12	13	14	15
TT	V	026	B	G	D	1	0	E	L	K	S

SERIES
TT = Tranquility Two Stage Scroll

CONFIGURATION
V = Vertical Up
H = Horizontal

UNIT SIZE
026 = “E, F, G, H”
038 = “E, F, G, H”
049 = “E, F, G, H”
064 = “E, F, G, H”
072 = “F, G, H”

REVISION LEVEL
B = Current Revision,
Unit sizes 026, 049, 064, 072
C = Current Revision,
Unit sizes 038

VOLTAGE
E = 265/60/1
G = 208-230/60/1
H = 208-230/60/3
F = 460/60/3

CONTROLS
D = DXM
M = DXM w/LON
P = DXM w/MPC

B = DXM
K = DXM w/LON
S = DXM w/MPC
} w/ Disconnect

CABINET

	OPTION	RANGE	ULTRA QUIET	1” FILTER RACK	2” FILTER RACK	1” FILTER FRAME	2” FILTER FRAME
1	1	EXTENDED RANGE	NO	YES	NO		
	A			NO			YES
	J			NO	YES	NO	
	K			NO		YES	NO
1	2		YES	YES	NO		
	C			NO			YES
	L			NO	YES	NO	
	M			NO		YES	NO
1	3	STANDARD RANGE	NO	YES	NO		
	E			NO			YES
	N			NO	YES	NO	
	P			NO		YES	NO
1	4		YES	YES	NO		
	G			NO			YES
	R			NO	YES	NO	
	S			NO		YES	NO

STANDARD
S = Standard

SUPPLY AIR FLOW & MOTOR CONFIGURATION

	Supply	Configuration	Motor
K	Top	TTV	ECM
P	Back	TTH	ECM
W	Straight	TTH	ECM

RETURN AIR FLOW CONFIGURATION
L = Left Return
R = Right Return

HEAT EXCHANGER OPTIONS

	Non Coated Air Coil		Tin Plated Air Coil/ Microchannel 4	
	Copper	Cupro-Nickel	Copper	Cupro-Nickel
2 Reheat	E	P	D	F

WATER CIRCUIT OPTIONS
0 = None
2 = HWG (Coil Only)

1. Commercial Units are to be Black w/Silver Front Access Panels.
2. Units with Reheat are available with Control Options “D”, “M”, “P”, “B”, “K” and “S” only.
   Digit 11 must be ”0” or “2”.
   Options “P” and “F” Bronze Pump Only
   Options “D”, “F”, “E” and “P” come standard with Non-Coated Reheat Coil
3. For UltraQuiet option base pan and all acess panels are coverd with high density noise suppression material and 1/2” fiberglass insulation. Blower housing is covered with high density noise suppression material. Spring isolation for the compressor.
4. Size 038 Rev “C” comes standard with Non-Coated Microchannel Air Coil.

SEE PAGE 2 FOR REVISIONS

CLIMATEMASTER
7300SW44th
OKLA.CITY,OK73179

DESCRIPTION: Decoder TTV TTH Commercial

DRAWN: TM	DATE: 04/11/11	ENG: JE	DATE: 04/11/11
ISSUED: 11-0144	DATE: 04/11/11	DWG #: Decoder TTV TTH TTD cmrcl	REV A	SHEET 1-2

DRAWINGNO:

Decoder TTV, TTH Residential

Z46

1 2	3	4 5 6	7	8	9	10	11	12	13	14	15
TT	V	0 2 6	B	G	D	0	1	D	L	K	S

SERIES
TT = Tranquility Two Stage Scroll

CONFIGURATION
V = Vertical Up
H = Horizontal

UNIT SIZE
026
038
049
064
072

REVISION LEVEL
B = Current Revision For Residential Units K5 Compressor (Effective 4-9-12, 038 Only); (Effective 7-10-12, 026, 049, 064, and 072)

C = Current Revision For Residential Units K5 Compressor and Microchannel Air Coils (Effective 9-13-12, Size 038 Only)

VOLTAGE
G = 208-230/60/1

CONTROLS
D = DXM (Reheat Only)

CABINET
0 = Residential

WATER CIRCUIT OPTIONS
0 = None
1 = HWG w/Internal Pump

HEAT EXCHANGER OPTIONS

	Tin Plated Air Coil/ Microchannel (3)	
	Copper	Cupro-Nickel
(2) Reheat	D	F

RETURN AIR FLOW CONFIGURATION
L = Left Return
R = Right Return

SUPPLY AIR FLOW & MOTOR CONFIGURATION

	Supply	Configuration	Motor
K	Top	TTV	ECM
P	Back	TTH	ECM
W	Straight	TTH	ECM

STANDARD
S = Standard

Notes:
1. Residential Units are to be Black w/Stainless Steel Front Access Panels and have 75VA transformer, Loop Pump & HWG Connections, and CXM with ECM controls.. Units with Reheat come standard,with DXM Controls.
2. Units with Reheat are standard with Non-Coated Reheat Coil and are available with Control Option “D” Only. Option “F” is Bronze Pump Only.
3. Size 038 Rev “C” comes standard with Non-Coated Microchannel Air Coils.

SEE PAGE 2 FOR REVISIONS

CLIMATEMASTER
7300SW44th
OKLA.CITY,OK73179

DESCRIPTION: Decoder TTV TTH Residential

DRAWN: TM	DATE: 04/04/12	ENG: WW	DATE: 004/0412
ISSUED: 12-0069	DATE: 04/0412	DWG #: Decoder TTV TTH TTD Res	A SHEET 1-2

WATER X WATER | TMW LARGE

DRAWINGNO:

Decoder UMW-LARGE CAPACITY

Z 1D

1 2 3	4 5 6	7	8	9	10	11	12	13	14	15
UMW	360	A	F	S	S	A	R	0	0	S

MODEL TYPE
UMW = TRANQUILITY MEDIUM TEMPERATURE WATER TO WATER

UNIT SIZE (nominal kbtu/h)
360
600
840

REVISION LEVEL
A = CURRENT

VOLTAGE
F = 460/60/3
H = 208-230/60/3
N = 575/60/3
U = 380-420/50/3 (No Agency Approval)

CONTROLS
S = SINGLE UNIT CONTROL

COMPRESSOR TYPE
S = SCROLL

REFRIGERANT
A = HFC410A

APPLICATION
R = REVERSE CYCLE HEAT PUMP

WATER ISOLATION VALVES
0 = NONE
(3) B = EVAP & COND MOTORIZED VALVES
C = EVAP MOTORIZED VALVES
(3) S = COND MOTORIZED VALVES

REFRIGERANT OPTIONS
0 = NONE

MODEL CONFIGURATION
S = STANDARD

NOTES:
1. UNITS ARE PAINTED BLACK (PEWTER)
2. STANDARD LOAD/SOURCE WATER CONNECTIONS ARE TOP.
3. IF DIGIT 13 IS OPTION "B" or "S", AND IF THE ESWT IS 60F OR BELOW IN COOLING MODE, THEN CONDENSER MWV IS REQUIRED.

REV	DESCRIPTION	BY	PCN	DATE	APPROVED
-	SEE SHEET 2 FOR REVISION HISTORY				

CLIMATEMASTER®
7300SW44th
OKLA.CITY,OK73179

DESCRIPTION: Decoder UMW-LARGE CAPACITY

DRAWN:	DATE:	ENG:	DATE:
TM	3/3/11	TA	3/3/11

ISSUED:	DATE:	DWG #:		SHEET
11-0104	3/3/11	Decoder UMW-LARGE	B	1-2

V PRODUCT CODING

VERTICAL LARGE BELT DRIVE

TC, TL BELT DRIVE

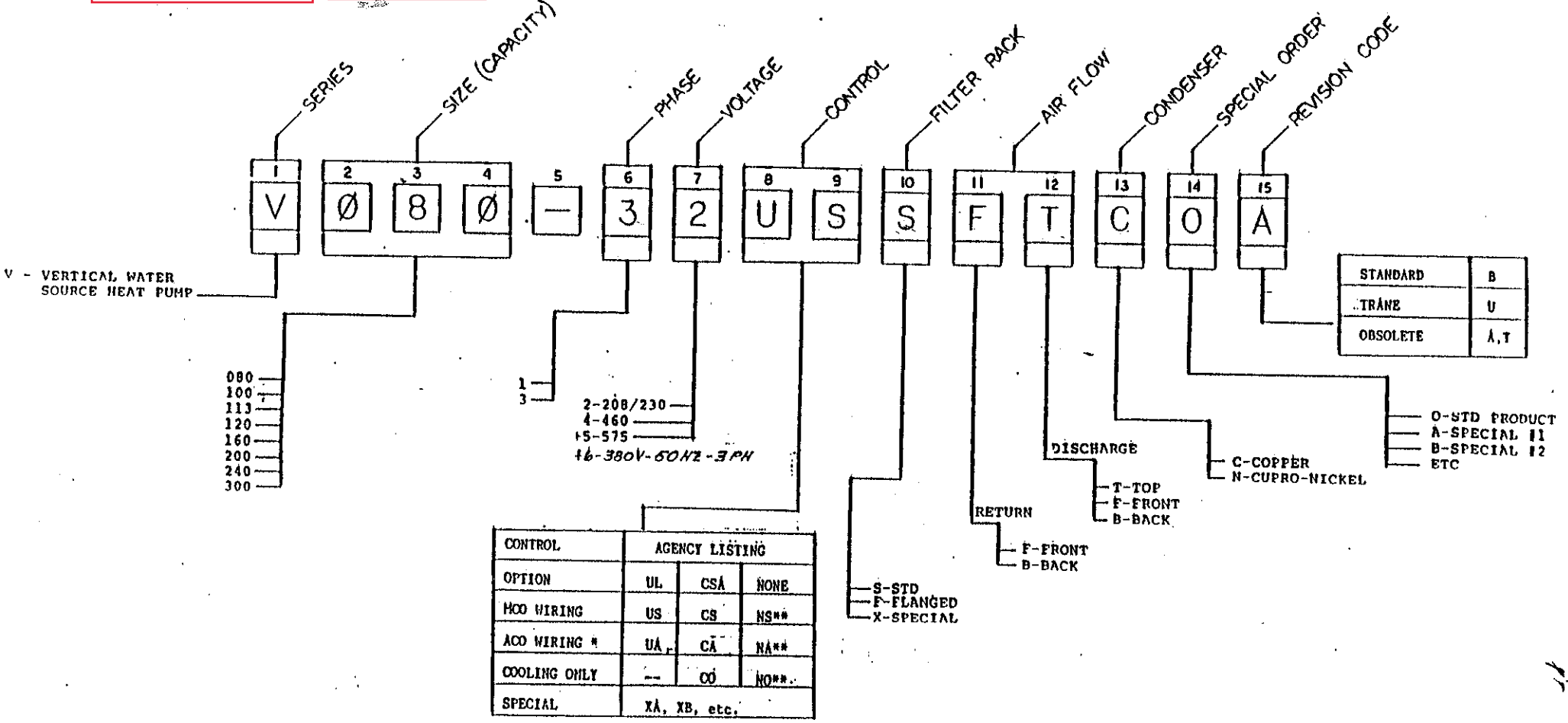

CONTROL	AGENCY LISTING		
OPTION	UL	CSA	NONE
HCO WIRING	US	CS	NS**
ACO WIRING *	UA	CA	NA**
COOLING ONLY	--	CO	NO**
SPECIAL	XA, XB, etc.		

REV	DESCRIPTION	DISTRIB / ECO.NO.	DATE
09	CNG CONTROL OPT LISTING & REV. CODE CHART	DISTRIB	4/22/89
08	ADDED "6" FOR 380V-50HZ-3PH	DISTRIB	4/8/88
07	TRANE IS REV KORK FOR ALL UNITS EXCEPT 113	DISTRIB	2/14/88
06	ADD "T" FOR TRANE; "U" FOR TRANE - "B" SUFFIX	DISTRIB	10/21/87
05	ADDED 08 REV KORK 100,120,200,240,300	DISTRIB	10-1-87
04	ADD OS & OA TO CONTROL FOR V100 & V200 ONLY	DISTRIB	1/3/85

* APPLIES TO V113, 160,200,240,300 ONLY

** APPLIES TO V300, AND ALL V SERIES WITH 380V POWER SUPPLY

68823200

REV. A

DRAWING NO: 68

CLASS CODE: Z40

NOTES:
1. V300 IS AVAILABLE IN TOP DISCHARGE ONLY
2. NON-UL/CSA
3. V080 ARE OBSOLETE. FOR V•080 SEE DECODER SHEET 69169133.

VERTICAL, LARGE, BELT DRIVE

TC, TL BELT DRIVE

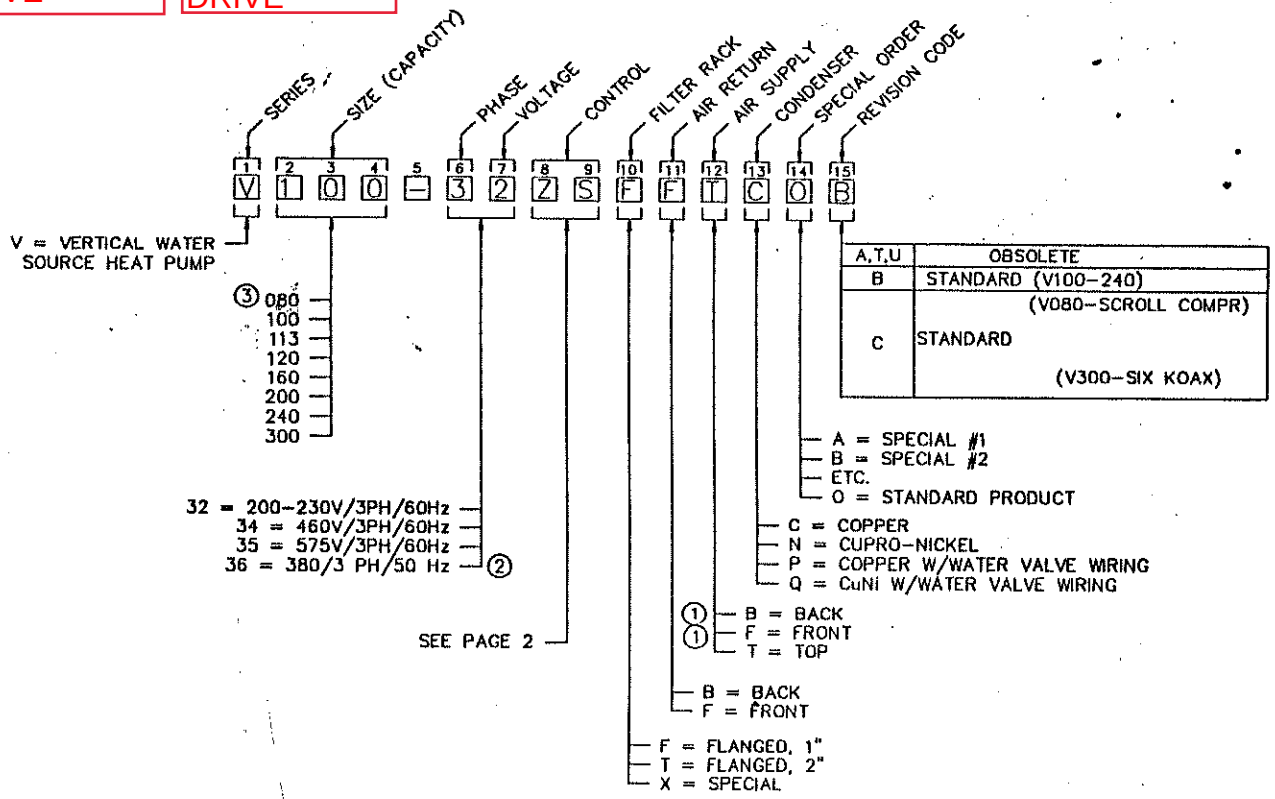

A,T,U	OBSOLETE
B	STANDARD (V100-240) (V080-SCROLL COMPR)
C	STANDARD (V300-SIX KOAX)

REV	DESCRIPTION	BY	PCN	DATE	APPROVED
	CHANGED NOTE 1& 10TH DIGIT FROM "S" TO "F"	SAM	97-0094	6/5/97	
	ADDED NOTE 3	DBM	U11209	09/05/96	BM
	REVISED DIGIT 13 AND 15	JFK	U10627	11/09/95	BM
	REV CODE OPTION B WAS V100; ADDED TO REV CODE OPTION C; PHASE/VOLTAGE 12 IS UNAVAILABLE	RSS	U10293	3/28/95	BM
P	REMOVED NOTE 2, REVISED REVISION CODE (C)	BL	U10194	2-1-95	BM
N	DELETED NOTE 3; CHANGED NOTE 2; COMBINED DIGITS 6 & 7 & ADDED TO THEM	KB	U9341	8/25/93	JN
M	ADDED NOTES	JMT	U9233	6/17/93	JN
L	MOVED •NOTE TO SHT.2 ADDED SIZE TO B,C OPTION ON REVISION CODE.	BL	U9144	4/14/93	PC
K	UPDATED TITLE BLOCK AND ADDED OPTION C ON REVISION CODE	KB	U9055	2/3/93	PC
J	REVISED AND REDRAWN TO CAD FORMAT, ADDED PAGE 2	KB	U9016	1/8/93	PC

UNLESS SPECIFIED OTHERWISE DIMENSIONS ARE IN INCHES. TOLERANCE ON DECIMALS = ±.031 ANGLES = ±1°

MATERIAL:

ClimateMaster 7300 SW 44th OKLA. CITY, OK 73179

TITLE: V SERIES DECODER

DRAWN: U/K DATE: U/K DRAWING NO: 68823200

ENG: DATE: CAD NO: 68823200

ISSUED: U/K DATE: U/K SCALE: .500 A SHEET 1

LASS CODE: Z45

VERTICAL COMPACT | TCV

DRAWING NO: 69 01

1	2	3	4	5	6	7	8	9	10	11	12	13	14	15
SERIES	APPLICATION	SIZE (CAPACITY)			POWER SUPPLY	AGENCY	CONTROL		AIRFLOW/FILTER RACK		CABINET	CONDENSER	STANDARD/SPECIAL	REVISION CODE
V	E	0	3	6	G	S	S	S	L	T	P	C	S	A

VERTICAL

E = EXTENDED RANGE HEAT PUMP

009–E,G,V
012–E,G,V
015–E,G,V
019–E,G,V
024–E,G,V
030–F,G,H,U
036–E,F,G,H,U,V
042–F,G,H,U
048–F,G,H,N,U
060–F,G,H,N,U
072–F,G,H,U
096–F,G,H,N,U
120–F,G,H,N,U

NOT AVAILABLE AT THIS TIME

E = 265V/1PH/60Hz
F = 460V/3PH/60Hz
G = 208V,230V/1PH/60Hz
H = 208V,230V/3PH/60Hz ⑥
N = 575V/3PH/60Hz ④
U = 380V/3PH/50Hz
V = 220V,240V/1PH/50Hz ①

C = CSA ONLY
N = NON UL/NON CSA
S = UL/CSA

REFER TO SHEET 2 FOR COMMERCIAL CONTROL OPTIONS ⑤

RETURN/DISCHARGE/FILTER RACK

LT = LEFT/TOP/1"
RT = RIGHT/TOP/1"
FT = FRONT/TOP/1"
BT = BACK/TOP/1"
③ 15 = FRONT/TOP/1"
25 = LEFT/TOP/1"
35 = BACK/TOP/1"
45 = RIGHT/TOP/1"
L2 = LEFT/TOP/2"
R2 = RIGHT/TOP/2"
F2 = FRONT/TOP/2"
B2 = BACK/TOP/2"

A = STANDARD EFFICIENCY (SIZE 009–015, 036/060)
B = AWF COMPRESSOR

SIZE	VOLTAGE
019	G,E,V
024	G
030	F,U,H

S = STANDARD
A,B,C,...(EXCEPT S) = SPECIAL

② C = COPPER
D = COPPER w/HWG
E = CuNi w/HWG
N = CUPRO/NICKEL
P = COPPER w/WATER VALVE WIRING
Q = CuNi w/WATER VALVE WIRING

D = DISTRIBUTOR (PAINTED) 21" FS		
COMMERCIAL UNITS	33.5" FS	21" FS
GALVANIZED	G	H
PAINTED	P	Q
MUTE PACKAGE (GALV)	M	N

OTES:
NON UL/CSA.
HWG AVAILABLE ON SIZES 019–060 ONLY, AND 230V UNITS ONLY (G & H).
SIZE 019–060 CUBE UNITS ONLY.
CSA ONLY.
DISTRIBUTOR UNITS COME STANDARD WITH ANTI-SHORT CYCLE TIMER AND SERVICE SIGNAL TO TSTAT. DIGITS 8 & 9 ARE "SS" FOR DIGIT 12=D.
DISTRIBUTOR UNITS ARE WIRED FOR 230V POWER.
COMMERCIAL UNITS ARE WIRED FOR 208V POWER.

REV	DESCRIPTION	BY	PCN	DATE	APPROVED
	DDED "E,V, 030 F,U & H" TO REV CODE	JMC	98-0078	02/12/98	
R	ADDED 'B' REV CODE, REMOVED ITEMS 'F,H&U' FROM 024 SIZE	JMC	97-0430	11/24/97	WW
P	DELETED NOTES 7,8;DELETED REVISION CODE OPTION C	RSS	U10345	5/02/95	BM
N	ADDED TO NOTE 5;SIZE OPTIONS 072,096,&120 ARE UNAVAILABLE;ADDED NOTES 7,8;ADDED E TO SIZE OPTION 030; ADDED N TO SIZE OPTION 042;ADDED TO REV OPTION C	RSS	U10293	3/28/95	BM
M	ADDED BUBBLES REFERENCING NOTE 6;MISC OTHER NOTE REFERENCES	ML	U10194	2-1-95	BM

UNLESS SPECIFIED OTHERWISE DIMENSIONS ARE IN INCHES TOLERANCES ARE
DECIMALS = ±.031
ANGLES = ±1°

MATERIAL:

ClimateMaster 7300 SW 44th OKLA. CITY, OK 73179

TITLE: VERTICAL SERIES DECODER
EXTENDED RANGE LOW TEMPERATURE/25°F–110°F

DRAWN: RL	DATE: 10/17/90	DRAWING NO: 69169101	
CHK: U/K	DATE: U/K	C.A.D. NO: 69169101	
ISSUED: U/K	DATE: U/K	SCALE: .888	A SHEET 1

DRAWING 99D0002N07

S CODE: Z45

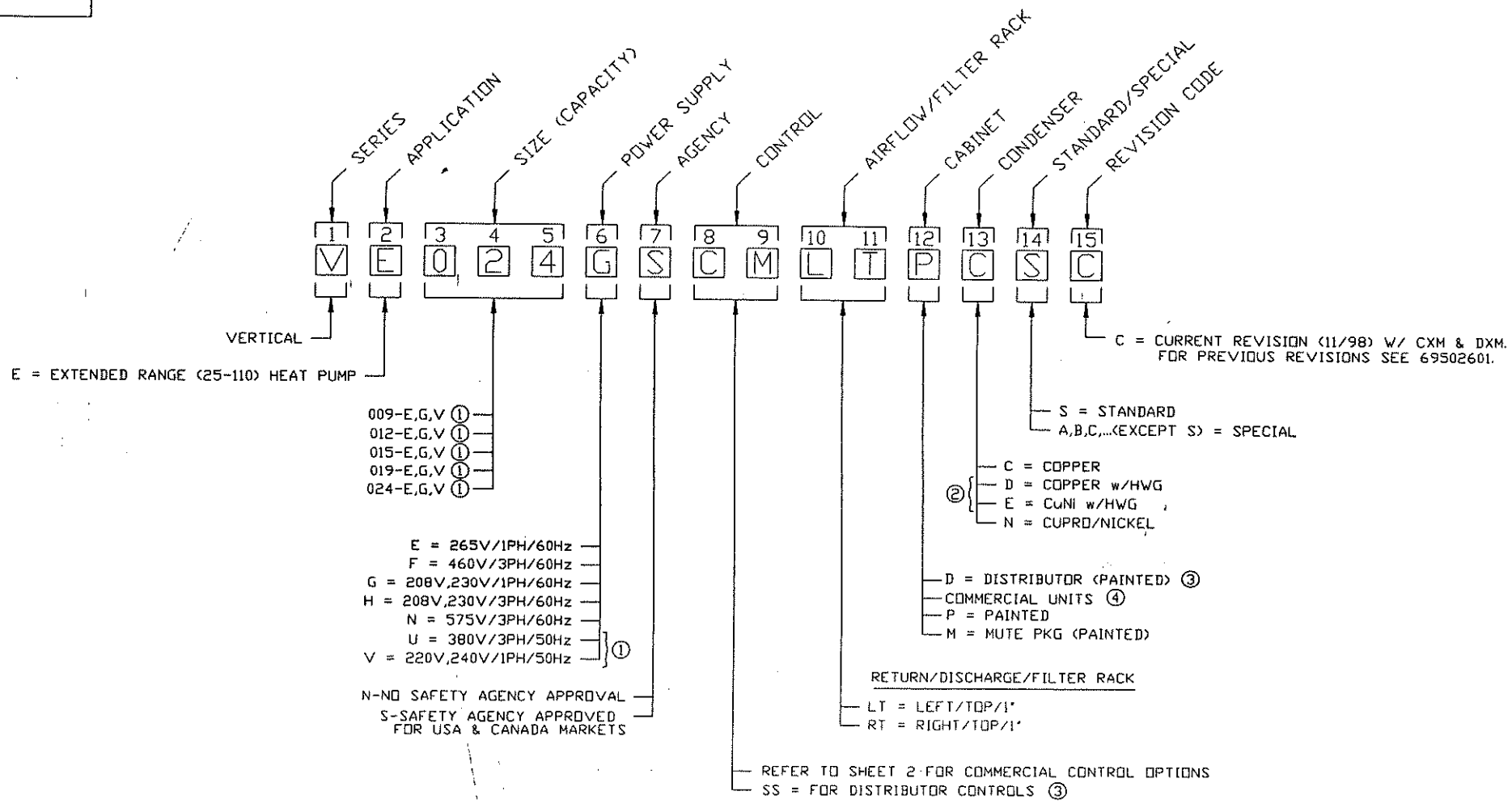

SAFETY AGENCY APPROVAL. DIGIT 7 = N.
AVAILABLE ON SIZES 019-024
Y, AND 230V UNITS ONLY (G & H)
TRIBUTOR UNITS HAVE NO OPTIONS,
E STANDARD WITH 75VA TRANSFORMER, CXM BOARD,
P PUMP TERMINAL BLOCK, AND ARE WIRED FOR
V POWER (DIGIT 6 = G). DIGITS 7,8,&9 =SSS.
T 6 = G OR H UNITS ARE WIRED FOR 208V POWER.

DESCRIPTION	BY	PCN	DATE	APPROVED	DESCRIPTION				
				X	X	XX			

MATERIAL:

CLIMATEMASTER • 7300 SW 44th OK CITY, OK 73179

TITLE: VE DECODING SHEET

DRAWN JK	DATE 10/3/98	DRAWING NO 99D0002N07	
ENG BW	DATE 10/9	CAD NO 99D0002N07	
ISSUED 98-0516	DATE 9/28/98	SCALE 1.00	

JUL 2 1 1997

DRAWING NO: 6.

ASS CODE: Z72

VERTICAL COMPACT TCV

1	2	3	4	5	6	7	8	9	10	11	12	13	14	15
V	P	0	3	6	G	S	S	S	L	T	P	C	S	C
SERIES	APPLICATION	SIZE (CAPACITY)			POWER SUPPLY	AGENCY	CONTROL		AIRFLOW/FILTER RACK		CABINET	CONDENSER	STANDARD/SPECIAL	REVISION CODE

VERTICAL

- P = EXTENDED RANGE HEAT PUMP
- R = EXTENDED RANGE COOLING ONLY
- A = EXTENDED RANGE HEAT PUMP R407C
- B = EXTENDED RANGE COOLING ONLY R407C

(4)

030–E,F,G,H,U,V
036–E,F,G,H,U,V
042–F,G,H,N,U
048–F,G,H,N,U
060–F,G,H,N,U

E = 265V/1PH/60Hz
F = 460V/3PH/60Hz
G = 208V,230V/1PH/60Hz
H = 208V,230V/3PH/60Hz
N = 575V/3PH/60Hz
U = 380V/3PH/50Hz
V = 220V,240V/1PH/50Hz

(6) (1)

N = NON CSA/NRTL
S = CSA/NRTL

REFER TO SHEET 2 FOR COMMERCIAL CONTROL OPTIONS (5)

RETURN/DISCHARGE/FILTER RACK

- LT = LEFT/TOP/1"
- RT = RIGHT/TOP/1"
- L2 = LEFT/TOP/2"
- R2 = RIGHT/TOP/2"

- C = COPPER
- D = COPPER w/HWG
- E = CuNi w/HWG
- N = CUPRO/NICKEL
- P = COPPER w/WATER VALVE WIRING
- Q = CuNi w/WATER VALVE WIRING

(2)

D = DISTRIBUTOR (PAINTED) 21" FS		
COMMERCIAL UNITS	33.5" FS	21" FS
PAINTED	P	Q
(4) MUTE PACKAGE (GALV)	M	N

- C= CURRENT REV
- S = STANDARD
- A,B,C,...(EXCEPT S) = SPECIAL

TES:
NON CSA/NRTL
HWG AVAILABLE ON SIZES 019–060 ONLY, AND 230V UNITS ONLY (G & H).
NOT AVAILABLE AT THIS TIME
DISTRIBUTOR UNITS COME STANDARD WITH ANTI-SHORT CYCLE TIMER AND SERVICE SIGNAL TO TSTAT. DIGITS 8 & 9 ARE ZS FOR DIGIT 12=D
DISTRIBUTOR UNITS ARE WIRED FOR 230V POWER.
COMMERCIAL UNITS ARE WIRED FOR 208V POWER.

B	CORRECTED DECODER TO ELIMINATE FRONT TOP/BACK TOP OPTIONS	JMC	97-0217	07/08/97					
A	REVISED DIGIT 4,6,7,12, CHANGED NOTE 1 AND 4 REMOVED NOTE 3	JFK	U10627	11/09/95	BM				

UNLESS SPECIFIED OTHERWISE DIMENSIONS ARE IN INCHES. TOLERANCES ON: DECIMALS = ±.031 ANGLES = ±1°

MATERIAL:

ClimateMaster 7300 SW 44th OKLA. CITY, OK 73179

TITLE: VERTICAL SERIES DECODER
EXTENDED RANGE LOW TEMPERATURE/25°F–110°F

DRAWN: RSS	DATE: 5/02/95	DRAWING NO: 69169139	
ENG: BM	DATE: 5/08/95	C.A.D. NO: 69169139	

DRAWING 99D0002N09

S CODE: Z72

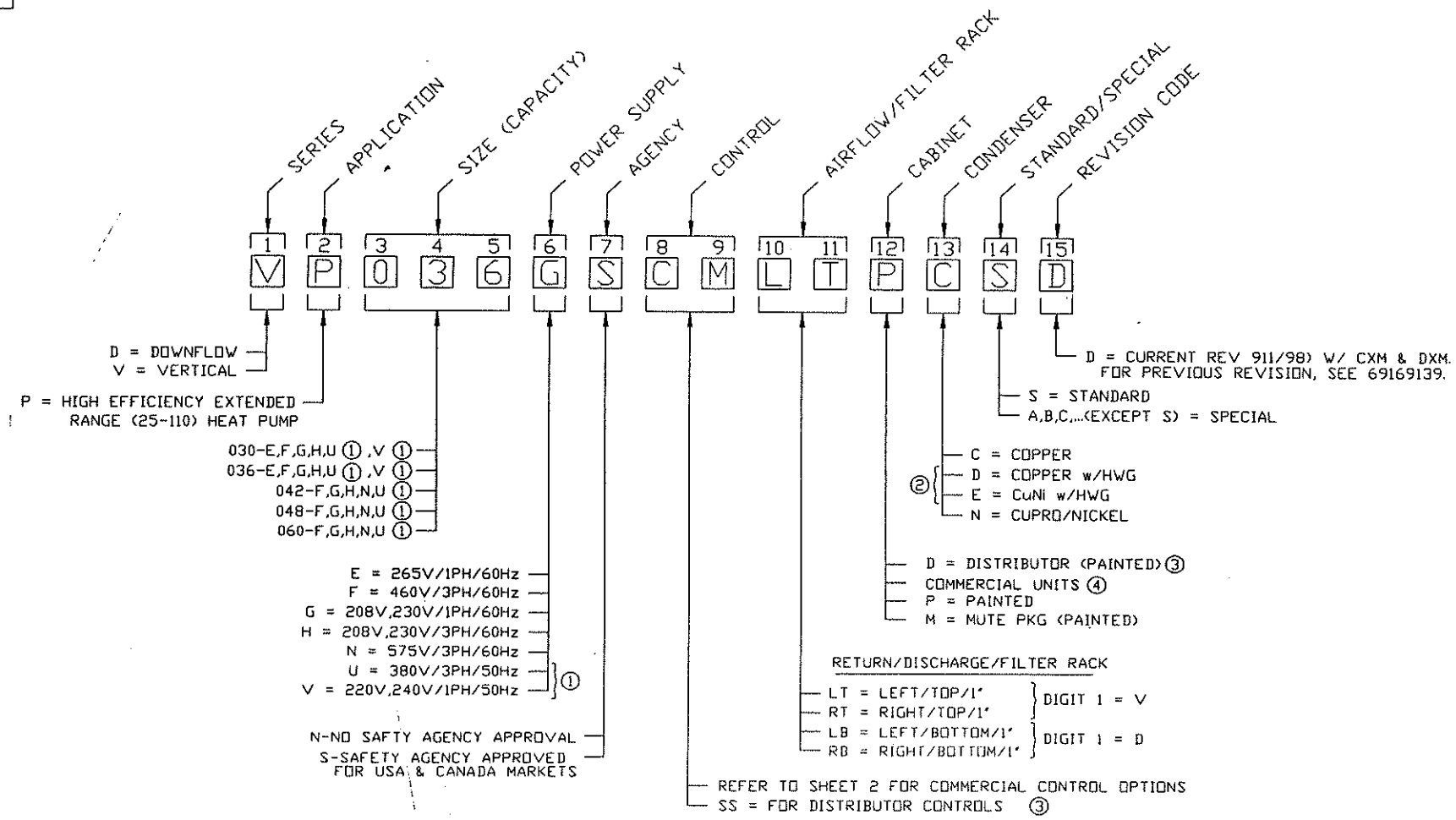

SAFETY AGENCY APPROVAL. DIGIT 7 = N.
AVAILABLE ON SIZES 030-060
Y, AND 230V UNITS ONLY (G & H)
TRIBUTOR UNITS HAVE NO OPTIONS,
E STANDARD WITH 75VA TRANSFORMER, CXM BOARD,
P PUMP TERMINAL BLOCK, AND ARE WIRED FOR
V POWER (DIGIT 6 = G). DIGITS 7,8,&9 =SSS.
IT 6 = G OR H UNITS ARE WIRED FOR 208V POWER.

DESCRIPTION	BY	PCN	DATE	APPROVED	REV	DESCRIPTION	BY	PCN	DATE	APPROVED
					X	X	XX			

MATERIAL:

CLIMATEMASTER 7300 SW 44th OK CITY, OK 73179

TITLE: VE DECODING SHEET

DRAWN: JK	DATE: 10/3/98	DRAWING NO: 99D0002N09	
ENG: BA	DATE: 10/9	CAD NO: 99D0002N09	
ISSUED: 98-0516	DATE: 9/28/98	SCALE: 1.00	A SHEET 1

CLASS CODES:
VC = Z43
VL = Z42
VM = Z44
VS = Z41

VERTICAL COMPACT | TCV

PRODUCT CODING

VERTICAL UNITS (COMMERICAL)

1	2	3	4	5	6	7	8	9	10	11	12	13	14	15
SERIES	APPLICATION	SIZE(CAPACITY)			POWER SUPPLY	AGENCY	CONTROLS		AIR FLOW FILTER RACK		CABINET	CONDENSER	STANDARD/SPECIAL	REVISION CODE
V	S	0	1	9	G	S	S	S	L	T	P	C	S	A

V = VERTICAL

S = STANDARD RANGE HEAT PUMP
L = LOW TEMPERATURE HEAT PUMP
① C = STANDARD RANGE COOL ONLY
① M = LOW TEMPERATURE COOL ONLY

009-A/G/E/V ②
012-A/G/E/V ②
015-G/E/V ②
019-G/E/V ②
024-G/E/V ②
030-G/E/V②/F/H/U ②
036-G/E/V②/F/H/U ②
042-G/F/H/U ①
048-G/F/H/U②/N ①
060-G/F/H/U②/N ①

③ A = 115V/1PH/60Hz
E = 265V/1PH/60Hz
F = 460V/3PH/60Hz
G = 208V-230V/1PH/60Hz
H = 208V-230V/3PH/60Hz
② U = 380V-420V/3PH/50Hz
② V = 220V-240V/1PH/50Hz
① N = 575V/3PH/60Hz

U-UL
C-CSA
N-NON UL/CSA
S-UL/CSA

SEE PAGE 2 FOR COMMERCIAL CONTROL OPTIONS ④

RETURN/DISCHARGE/FILTER RACK
LT = LEFT/TOP/1"
RT = RIGHT/TOP/1"
FT = FRONT/TOP/1"
BT = BACK/TOP/1"
XA = SPECIAL
L2 = LEFT/TOP/2"
R2 = RIGHT/TOP/2"
F2 = FRONT/TOP/2"
B2 = BACK/TOP/2"

D = DISTRIBUTOR (PAINTED) ④
COMMERCIAL UNITS: ⑥
P = PAINTED
M = MUTE PACKAGE (PAINTED)

C = COPPER
N = CUPRO-NICKEL
X = SPECIAL
P = COPPER (WATER VALVE WIRING)
Q = CUPRO-NICKEL (WATER VALVE WIRING) ⑤
R = COPPER(WATER REGULATING VALVE SCHRADER PORT) ⑤
S = CUPRO-NICKEL(WATER REGULATING VALVE SCHRADER PORT)

S = STANDARD
A,B,C...(EXCEPT S) SPECIAL

A = CURRENT REVISION (SIZES 009-015; 036-060)
Y = EUROPEAN (SIZES 009-015; 036-060) ②
B = AWF COMPRESSOR
Z = EUROPEAN SIZE 030'V' VOLTAGE ②

SIZE	VOLTAGE
019	G,E,V
024	G,E,V
030	G,E,H,V,F,U

NOTES:
1. CSA ONLY.
2. NON UL/CSA. DIGIT 7 = N.
3. ONLY AVAILABLE ON SIZES 009-012.
4. DISTRIBUTOR UNITS HAVE NO OPTIONS, COME STANDARD WITH ANTI-SHORT CYCLE AND SERVICE SIGNAL TO TSTAT, AND ARE WIRED FOR 230V POWER (DIGIT 6 = G OR H).
5. WATER REGULATING VALVE SCHRADER PORT OPTIONS R & S NOT AVAILABLE FOR HL AND HM UNITS.
6. DIGIT 6 = G OR H UNITS ARE WIRED FOR 208V POWER.

REV	DESCRIPTION	BY	PCN	DATE	APPROVED
N	ADDED 'E,V,F & U TO REV CODE	JMC	98-0078	02/12/98	
M	ADDED 'B','Z' & SIZES TO THE REV CODE	JMC	97-0430	11/24/97	WW
L	ADDED REV OPTION Y AND TO NOTE 2	RSS	U10475	7/25/95	BM
K	REMOVED ALL PREVIOUS REV. NOTES;UPDATED CONTROL OPTIONS	ML	U10194	2-1-95	BM

ClimateMaster

TITLE: VS/VL/VC/VM DECODING SHEET

DRAWN: KN DATE: 12/6/90 DRAWING NO: 69502600
ENG: PG DATE: 1/29/91 C.A.D. NO: 69502600
ISSUED: U7737 DATE: 1/29/91 SCALE: .500 C SHEET 1

CLASS CODE: Z40

NOTES:
1. DIGIT 7 MUST=N
2. NOT AVAILABLE IN SIZE 300.
3. ALL UNITS TO BE PAINTED POLAR ICE.
4. UNAVAILABLE AT THIS TIME.
5. OPTIONS ARE NOT AVAILABLE ON SIZE 300.

1	2	3	4	5	6	7	8	9	10	11	12	13	14	15
V	S	1	6	0	F	S	S	S	F	A	P	C	S	C
TYPE	APPLICATION	SIZE (CAPACITY)			POWER SUPPLY	AGENCY	CONTROL		AIR FLOW CONFIG.	BLOWER DRIVE PKG.	CABINET/REFRIG.	CONDENSER	STANDARD\SPECIAL	REVISION CODE

TYPE: VERTICAL

APPLICATION:
- C = STANDARD RANGE COOLING ONLY
- E = EXTENDED RANGE HEAT PUMP
- L = LOW TEMPERATURE HEAT PUMP
- M = LOW TEMPERATURE COOLING ONLY
- S = STANDARD RANGE HEAT PUMP

(4)

SIZE (CAPACITY): 080, 100, 113, 120, 160, 200, 240, 300 (4)

POWER SUPPLY:
- F = 460V/3PH/60Hz
- H = 208V,230V/3PH/60Hz
- N = 575V/3PH/60Hz
- U = 380V,420V/3PH/50Hz

AGENCY:
- N = NON AGENCY APPROVED
- S = CSA/NRTL

CONTROL: REFER TO SHEET 2 FOR OPTIONS

AIR FLOW CONFIG.:

UNIT SIZES 080 thru 300			
OPTION	RETURN	DISCHARGE	FILTER
S	BACK	FRONT	1.000"
T	BACK	FRONT	2.000"
B	BACK	TOP	1.000"
C	BACK	TOP	2.000"
D	BACK	BACK	1.000"
E	BACK	BACK	2.000"
J	FRONT	FRONT	1.000"
K	FRONT	FRONT	2.000"
F	FRONT	TOP	1.000"
G	FRONT	TOP	2.000"
Z	FRONT	BACK	1.000"
A	FRONT	BACK	2.000"

(5) (5) (5)

BLOWER DRIVE PKG.:
- A = STANDARD DRIVE PACKAGE
- B
- C
- D
- E
- R = DRIVE PACKAGE 'A' (HIGH EFFICIENCY)
- S = DRIVE PACKAGE 'B' (HIGH EFFICIENCY)
- T = DRIVE PACKAGE 'C' (HIGH EFFICIENCY)
- U = DRIVE PACKAGE 'D' (HIGH EFFICIENCY)
- W = DRIVE PACKAGE 'E' (HIGH EFFICIENCY)

(4)

CABINET/REFRIG.:
- B = HOT GAS BYPASS
- E = WATERSIDE ECONOMIZER
- F = WATERSIDE ECONOMIZER & MUTE PACKAGE
- H = HOT GAS BYPASS & MUTE PACKAGE
- J = WATERSIDE ECONOMIZER & HOT GAS BYPASS
- K = UNIT ISOLATION KIT
- M = MUTE PACKAGE
- P = STANDARD

(4)

CONDENSER:
- C = COPPER
- N = CUPRO-NICKEL
- P = COPPER WATER VALVE WIRING
- Q = CUPRO-NICKEL WATER VALVE WIRING

STANDARD\SPECIAL:
- S = STANDARD
- A,B,C,...(EXCEPT S) = SPECIAL (1)

REVISION CODE:
- A,B = NON-EXISTENT
- C = CURRENT REVISION

REV	DESCRIPTION	BY	PCH	DATE	APPROVED
B	CHANGED NOTE 5 & CALLOUTS FOR DIGIT 10	SAM	97-0094	6/5/97	
A	MADE APPLICATION OPTION L & M UN[illegible]LE;MADE SIZE 080-120 & REFRIG. OPTION B AVAILA[illegible]DDED NOTE 6	RSS	U11212	9/13/96	

MATERIAL:

ClimateMaster 7300 SW 44th OKLA. CITY, OK 73179

TITLE: DECODER
LARGE COMMERCIAL UNITS - VERTICAL

DRAWN: BL	DATE: 2/19/96	DRAWING NO: 69[illegible]33	
ENG: AKHAN	DATE: 2/29/96	CAD NO: 691[illegible]	
ISSUED: U10786	DATE: 2/27/96	SCALE: .800	A SHEET 1

DRAWING NO:

Decoder VS VL 080–300

CLASS CODE: Z40

1	2	3	4	5	6	7	8	9	10	11	12	13	14	15
TYPE	APPLICATION	SIZE (CAPACITY)			POWER SUPPLY	AGENCY	CONTROL		AIR FLOW CONFIG.	BLOWER DRIVE PKG.	CABINET/REFRIG.	CONDENSER	STANDARD\SPECIAL	REVISION CODE
V	S	0	8	0	F	S	C	M	F	A	P	C	S	D

TYPE:
- V = LARGE COMMERCIAL UNIT (LCU) VERTICAL

APPLICATION:
- L = LOW TEMPERATURE (40–110) HEAT PUMP
- S = STANDARD RANGE (60–95) HEAT PUMP

SIZE (CAPACITY):
- 080
- 100
- 120
- 160
- 200
- 240
- 300

POWER SUPPLY:
- F = 460V/3PH/60Hz
- (3) H = 208V,230V/3PH/60Hz
- N = 575V/3PH/60Hz
- (1) U = 380V,420V/3PH/50Hz

AGENCY:
- N–NO SAFETY AGENCY APPROVAL
- S–SAFETY AGENCY APPROVED FOR USA & CANADA MARKETS

CONTROL:
- CM = CXM
- DM = DXM
- CL = CXM w/LON
- DL = DXM w/LON

AIR FLOW CONFIG.:

OPTION	RETURN	DISCHARGE	FILTER
S	BACK	FRONT	1.000"
B	BACK	TOP	1.000"
F	FRONT	TOP	1.000"
Z	FRONT	BACK	1.000"

UNIT SIZES 080 thru 240

OPTION	RETURN	DISCHARGE	FILTER
B	BACK	TOP	1.000"
F	FRONT	TOP	1.000"

UNIT SIZES 300

BLOWER DRIVE PKG.:
- A = STANDARD RPM/STANDARD MOTOR (ALL SIZES)
- B = LOW RPM/STANDARD MOTOR (ALL SIZES)
- C = HIGH RPM/STANDARD MOTOR (SIZE 080 & 160 ONLY)
- D = HIGH RPM/LARGE MOTOR (SIZE 080,100, 120, 200, & 240)

CABINET/REFRIG.:
- M = MUTE PACKAGE
- P = STANDARD
- (2)

CONDENSER:
- C = COPPER
- N = CUPRO–NICKEL

STANDARD\SPECIAL:
- S = STANDARD
- (1) A,B,C,...(EXCEPT S) = SPECIAL

REVISION CODE:
- D = CURRENT REV (11/98) W/ CXM & DXM. FOR PREVIOUS REVISION, SEE 69169133 & 68823200.

NOTES:
1. NO SAFETY AGENCY APPROVAL. DIGIT 7 = N.
2. ALL UNITS TO BE PAINTED POLAR ICE.
3. UNITS WIRED FOR 208V POWER.

REV	DESCRIPTION	BY	PCN	DATE	APPROVED
–	–	–			
–	–	–			
–	–	–			
–	–	–			
B	ADDED LON TO DIGIT 8&9 AND REVISED INFO. ON DIGITS 10 & 11 REMOVED NOTE 2	SAM	02–0092	4/11/02	
A	REMOVED SHEET 2 ADDED CL AND DL TO CONTROL	DR	02–0063	02/28/02	

CLIMATEMASTER®
7300 SW 44th
OKLA. CITY, OK 73179

DRAWING NO: Decoder VS VL 080-300

DRAWN: JK DATE: 6/29/00 ENG: NH DATE: 6/29/00

ISSUED: 000347 DATE: 6/23/00 A SHEET 1-1

LASS CODE: Z48

NOTES:
1. UNITS ARE WIRED FOR 230V POWER.

DRAWING NO: 69[illegible]8

RESIDENTIAL TWO STAGE | TZV, TEV

1	2	3	4	5	6	7	8	9	10	11	12	13	14	15
V	T	0	3	6	G	S	S	S	L	T	D	C	S	C
SERIES		SIZE (CAPACITY)			POWER SUPPLY	AGENCY	CONTROL		AIR FLOW CONFIGURATION		CABINET	CONDENSER	STANDARD\SPECIAL	REVISION CODE

T = VERTICAL TWIN

030
036
042
048
060
072

G = 208V,230V/1PH/60Hz (1)

N = NON CSA/NRTL
S =CSA/NTRL

SS = STANDARD
INCLUDES: CCM BOARD AND ICM CONTROL BOARD

OPTION	RETURN	DISCHARGE	DIGIT #1
LT	LEFT	TOP	V
RT	RIGHT	TOP	
LD	LEFT	DOWN	D
RD	RIGHT	DOWN	

D = DISTRIBUTOR, (PAINTED)

C = COPPER
(2) D = COPPER w/HOT WATER GENERATOR
(2) E = CUPRO-NICKEL w/HOT WATER GENERATOR
N = CUPRO-NICKEL

S = STANDARD
A,B,C,...(EXCEPT S) = SPECIAL

A = ORIGINAL REVISION w/CMC BOARDS
B = SIZE 072 HAS DIFFERENT COMPR
C = CURRENT VT REVISION w/CCM BOARD
D = CURRENT VT (SIZE 036-048 & 072) REV W/ SPORLAN VALVES
E = CURRENT VT060 REV W/TECUMSEH AWF COMPRESSOR

DESCRIPTION	BY	PCN	DATE	APPROVED	REV	DESCRIPTION	BY	PCN	DATE	APPROVED
					J	ADDED 'E' TO THE REV CODE REVISED & RETRACED DWG FROM REV H,	JMC	97-0430	11/24/97	

UNLESS OTHERWISE DIMENSIONS ARE IN INCHES TOLERANCES ON DECIMALS ± 0.031 ANGLES ± 0.1°

MATERIAL:

ClimateMaster 7300 SW 44th OKLA. CITY, OK 73179

TITLE: DECODER DT/VT (TWO STAGE)

DRAWN: DR	DATE: 4/28/93	DRAWING NO: 69169128	
ENG: RK	DATE: 6/30/93	C.A.D. NO: 69169128	
ISSUED: U9247	DATE: 6/30/93	SCALE: .800 A	SHEET 1

CLASS CODE: Z48

NOTES:
1. UNITS ARE WIRED FOR 230V POWER.

TEV

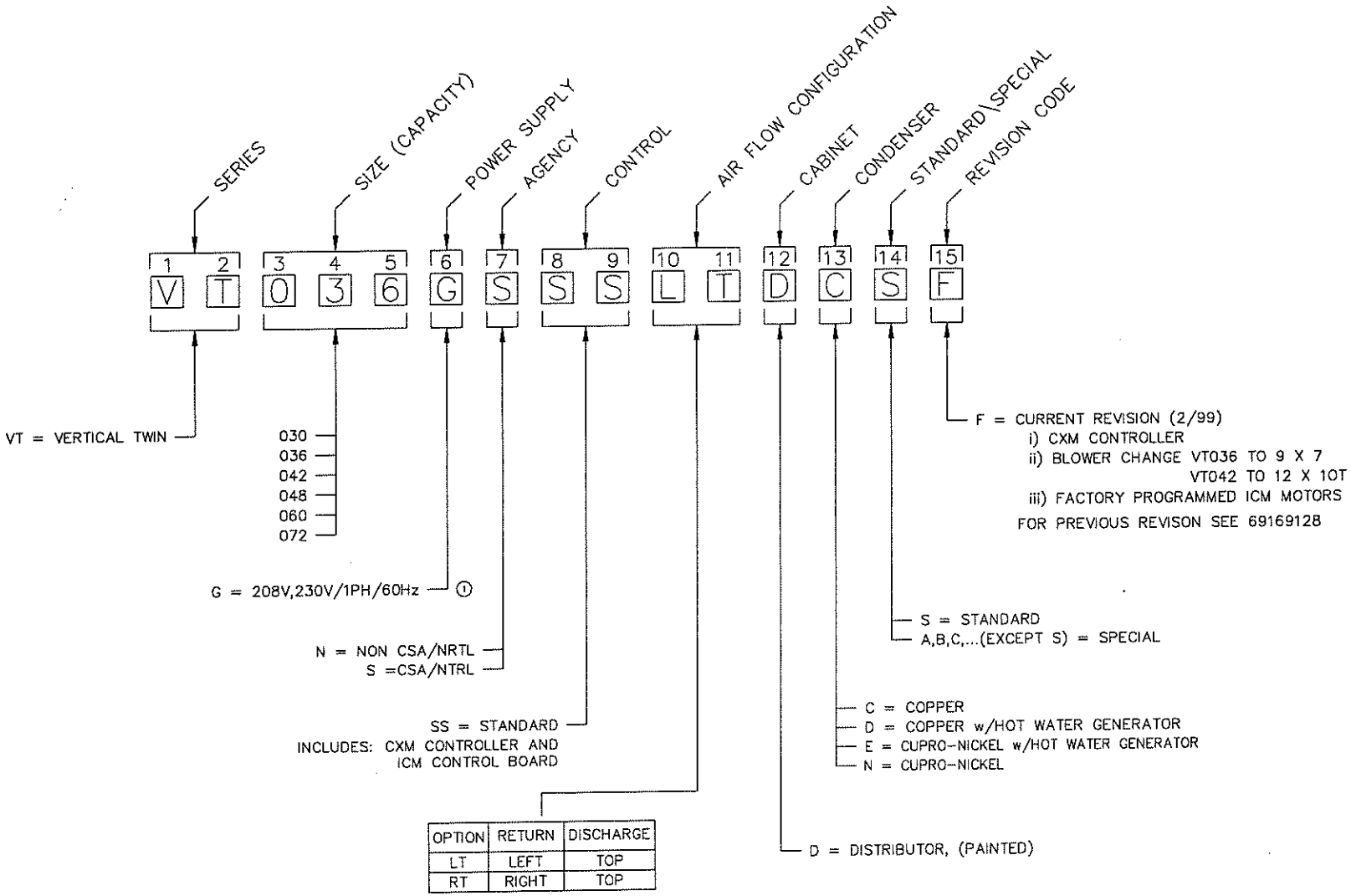

OPTION	RETURN	DISCHARGE
LT	LEFT	TOP
RT	RIGHT	TOP

REV	DESCRIPTION	BY	PCN	DATE	APPROVED
X	X				

REV	DESCRIPTION	BY	PCN	DATE	APPROVED
XX					

UNLESS SPECIFIED OTHERWISE DEMINSIONS ARE IN INCHES. TOLERANCES ON:
DECIMALS ±.031
ANGLES ±1°

MATERIAL:

CLIMATEMASTER • 7300 SW 44th OK CITY, OK 73179

TITLE: DECODER (ULTRA CLASSIC)
VT (TWO STAGE)

DRAWN: SR	DATE: 2/20/99	DRAWING NO: 99D0002N15	
ENG: LN	DATE: 2/24/99	C.A.D. NO: 99D0002N15	
ISSUED: 99-0106	DATE: 2/22/99	SCALE: 1.00	A SHEET 1

CLASS CODE: VTA=W50

PTAC, VERTICAL | NRA

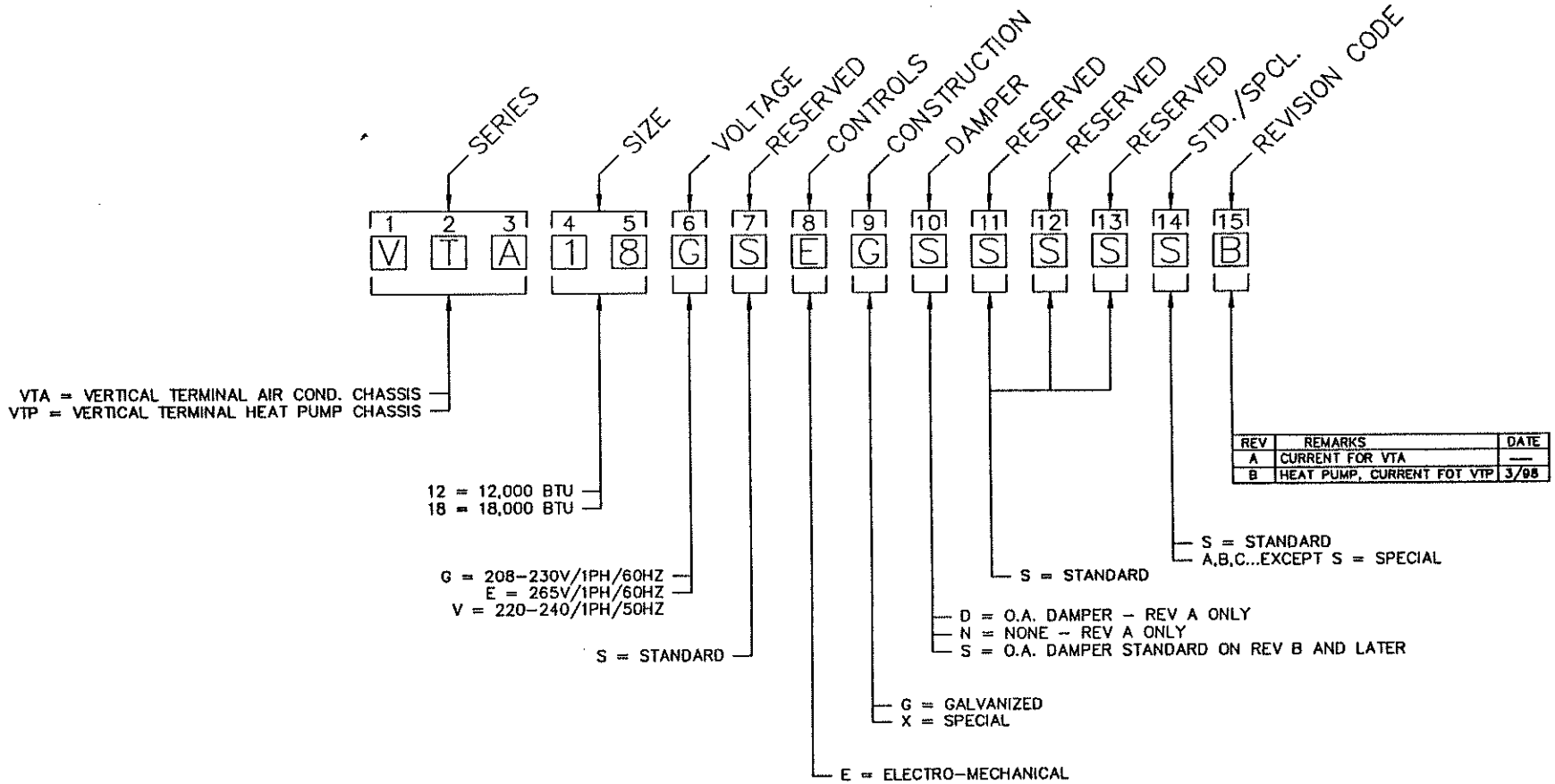

REV	REMARKS	DATE
A	CURRENT FOR VTA	—
B	HEAT PUMP, CURRENT FOT VTP	3/98

NOTE:
1. STD UNITS ARE CSA/NRTL APPROVED.
   SPECIALS ARE NOT AGENCY APPROVED.

REV	DESCRIPTION	BY	PCN	DATE	APPROVED
F	ADDED REV. BLOCK TO REVISION CODE.	GN	980529	10/09/98	
E	MODIFIED DIGITS 3, 10 & 15	DR	98-0062	02/20/98	EN
D	ADDED & REMOVED NOTES	JK	970380	11/3/97	EN
C	ADDED NOTES	JFK	U10627	11/09/95	BM
B	DIGIT 7 WAS FOR HEAT OPTION, REMOVED VTH SERIES & REVISED DIGIT DEFINITIONS	TW	U10354	5/4/95	TW
A	ADDED S OPTION TO RESERVED 11, 12, 13	RSS	U10293	3/28/95	BM

UNLESS SPECIFIED OTHERWISE DIMENSIONS ARE IN INCHES TOLERANCES ON DECIMALS = ±.005 ANGLES = ±1°

MATERIAL:

ClimateMaster 7300 SW 44th OKLA. CITY, OK 73179

TITLE: DECODER CHASSIS-VTAC

DRAWN: TW DATE: 8/17/94 DRAWING NO. 69169135

CHK: TW DATE: 10/10/94 C.A.D. NO. 69169135

ISSUED: U10025 DATE: 10/7/94 SCALE: .800 A SHEET 1

DRAWING NO: 69169130

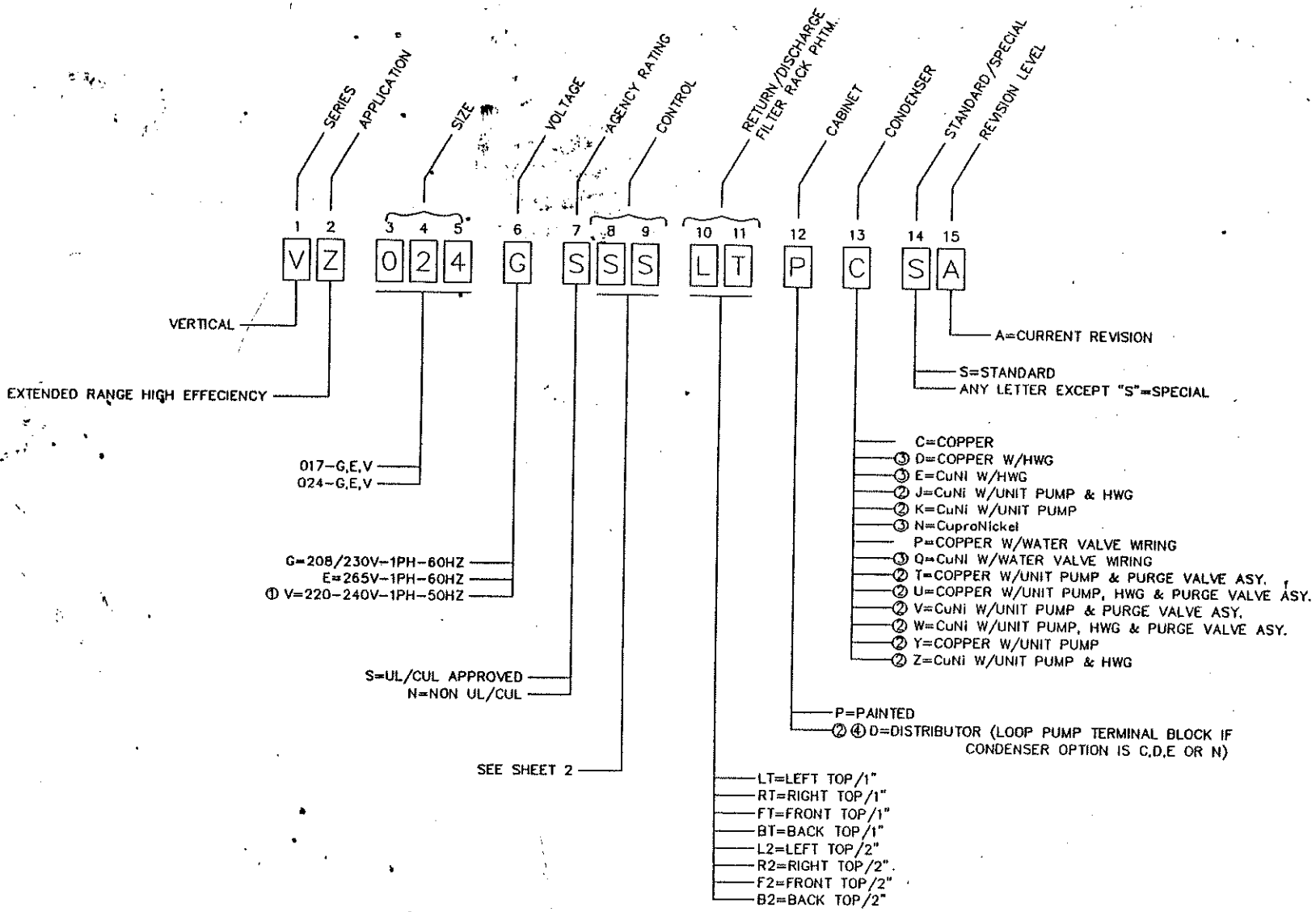

1. NON-UL/CUL
2. NOT AVAILABLE W/VOLTAGE V OPTION (50HZ).
3. NOT YET AVAILABLE.
4. DISTRIBUTOR IS STANDARD W/SERVICE SIGNAL TO TSTAT & ANTI-SHORT CYCLE TIMER.

REV	DESCRIPTION	BY	PCN	DATE	APPROVED
B	CHANGED CSA TO CUL ON DIGIT 7	JFK	U10627	11/09/95	BM
A	CABINET OPTION D, LOOP PUMP TERMINAL BLOCK WAS FUSED PUMP CONNECTIONS	RSS	U10293	3/28/95	BM

UNLESS SPECIFIED OTHERWISE DIMENSIONS ARE IN INCHES TOLERANCES ON: DECIMALS = ± 0.01 ANGLES = ± 1°

MATERIAL:

ClimateMaster 7300 SW 44th OKLA. CITY, OK 73179

TITLE: UNIT DECODER VZ

DRAWN: TW	DATE: 1/29/94	DRAWING NO: 69169130	
ENG: JN	DATE: 2/4/94	C.A.D. NO: 69169130	
ISSUED: U9607	DATE: 1/28/94	SCALE: 1.00	A SHEET 1

DRAWING NO:
Decoder WCE

CLASS CODES:
WCE = Z58

CONSOLE TRC

1	2	3	4	5	6	7	8	9	10	11	12	13	14	15
W	C	E	0	7	A	T	E	A	S	S	C	S	R	S
SERIES			SIZE (CAPACITY)		REVISION LEVEL	ELECTRICAL/REFRIGERANT	CONTROLS/AGENCY APPROVAL	POWER TERMINATION	CABINET	SUBBASE	HEAT EXCHANGER & APPLICATION OPTIONS	WATER CIRCUIT OPTIONS	WATER SUPPLY	STANDARD

WESPER= CONSOLE SERIES

07
09
12
15
19

CURRENT

	V/Hz/Ph	REFRIGERANT	
T	220–240/50/1	R407C	CE

NOTES:
1. DIGIT 11 MUST BE "N".
2. DIGIT 10 MUST BE B, C, E, F, G, OR N
3. ALL SPECIALS "X" ARE NOT AGENCY LISTED (EXCEPT BY SPECIAL ORDER).
4. CXM CONTROLLERS TAKE 50 VA TRANSFORMER. DXM CONTROLLERS TAKE 75VA TRANSFORMER. ALL DDC CONTROLLERS TAKE 75 VA TRANSFORMERS.
5. CHASSIS ONLY IS FOR BOTTOM RETURN UNIT REPLACEMENT.
6. DIGIT 12 MUST BE "C", "N","A", OR "J"
7.

SIZE	2.25 GPM/TON	3.0 GPM/TON
07	1.5	2.0
09	2.0	2.5
12	2.5	3.0
15	3.0	3.5
19	3.5	4.0

④	CONTROL OPTIONS	AGENCY APPROVAL ③
E	MCO W/CXM	CE FOR EUROPE
F	ACO W/CXM	
J	MCO W/DXM	
K	ACO W/DXM	
Q	REM TSTAT W/CXM	
G	REM TSTAT W/DXM	
H	LON W/CXM	
V	LON W/DXM	
T	MPC W/CXM	
U	MPC W/DXM	

A = FIELD CONNECTED (HARD WIRE)

S= STANDARD
③ A,B,C... (EXCEPT S) = SPECIAL

R= RIGHT
L= LEFT

		SWEAT	FPT	MPT
	NONE	S	F	M
	MOTORIZED WATER VALVE	A	G	N
⑦	AFR (2.25 GPM/TON)	B	H	P
⑦	AFR (3.0 GPM/TON)	C	J	Q
	MOTORIZED WATER VALVE & AFR (2.25 GPM/TON)	D	K	R
	MOTORIZED WATER VALVE & AFR (3.0 GPM/TON)	E	L	T
⑥	INTERNAL SECONDARY PUMP	U	V	W

	NON COATED AIR COIL		COATED AIR COIL	
	COPPER	CUPRO–NICKEL	COPPER	CUPRO–NICKEL
STD. RANGE	C	N	A	J
EXT. RANGE	E	F	V	M

S = 3" SUBBASE
D = 3" SUBBASE W/MOTORIZED DAMPER
G = 5" SUBBASE
H = 5" SUBBASE w/MOTORIZED DAMPER
② N = NONE

	NO LOCKING CONTROL DOOR		W/LOCKING CONTROL DOOR		NO CABINET
	BOTTOM RETURN	FRONT ① RETURN	BOTTOM RETURN	FRONT ① RETURN	CHASSIS ONLY ① ⑤
STANDARD	S	F	L	G	N
MUTE	M	B	D	E	C

REV	DESCRIPTION	BY	PCN	DATE	APPROVED
–	–	–			–
–	–	–			–
–	–	–			–
–	–	–			–
–	–	–			–
A	CHANGED NOTE 2,5, & 6 & REMOVED 8, & 9 UPDATED DIGIT 7,8, & 10	SAM	04–0188	5/19/04	

CLIMATEMASTER
7300 SW 44th
OKLA. CITY, OK 73179

DRAWING NO: Decoder WCE

DRAWN: SAM	DATE: 1/22/04	ENG: RL	DATE: 1/22/04
ISSUED: 04-0011	DATE: 1/22/04		A SHEET 1-1

CLASS CODE: Z71

DRAWING NO: 69169107

WATER TO WATER | TMW, TBW, TCW

1	2	3	4	5	6	7	8	9	10	11	12	13	14	15
SERIES	APPLICATION	SIZE (CAPACITY)			POWER SUPPLY	AGENCY	CONTROL		WATER RETURN	LOAD WATER COIL	CABINET	SOURCE WATER COIL	STANDARD/SPECIAL	REVISION CODE
W	E	0	3	6	G	S	S	S	1	C	P	C	S	A

SERIES: W = WATER to WATER UNIT

APPLICATION: E = EXTENDED RANGE HEAT PUMP

SIZE (CAPACITY): 036, 060, 120

POWER SUPPLY:
- E = 265V/1PH/60Hz
- F = 460V/3PH/60Hz
- G = 208V,230V/1PH/60Hz ⑤
- H = 208V,230V/3PH/60Hz ⑤
- N = 575V/3PH/60Hz
- U = 380V/3PH/50Hz ①
- V = 220V,240V/1PH/50Hz ①

AGENCY:
- N = NON CSA/NRTL
- S = CSA/NRTL

CONTROL:

ELECTRO-MECHANICAL:
- AN = RANDOM START
- AP = PROGRAM RELAY 24V
- SS = STANDARD CONTROLS ③

CMC BOARD:
- ZS = VERSION 8.9/9.0

WATER RETURN / LOAD DIRECTION:
- 1 = FRONT
- 2 = LEFT
- 3 = BACK
- 4 = RIGHT
- ② ②

LOAD WATER COIL:
- C = COPPER
- N = CUPRO/NICKEL
- V = DOUBLE WALL VENTED (CuNI) ③

CABINET:
- D = DISTRIBUTOR (PAINTED)
- P = COMMERCIAL (PAINTED)

SOURCE WATER COIL:
- C = COPPER
- D = COPPER w/HWG ④
- E = CuNI w/HWG ④
- N = CUPRO/NICKEL
- P = COPPER w/WATER VALVE WIRING
- Q = CuNI w/WATER VALVE WIRING

STANDARD/SPECIAL:
- S = STANDARD
- A,B,C,...(EXCEPT S) = SPECIAL

REVISION CODE:
- A = CURRENT REVISION
- Y = EUROPEAN (CE) ⑥

NOTES:
1. NON CSA/NRTL.
2. LEFT AND RIGHT WATER RETURN NOT AVAILABLE ON WE120.
3. "V" OPTION NOT AVAILABLE ON WE036.
4. AVAILABLE ONLY ON 230V UNITS, (G & H).
5. DISTRIBUTOR UNITS ARE WIRED FOR 230V POWER. COMMERCIAL UNITS ARE WIRED FOR 208V POWER.
6. CONTROL (DIGITS 8 & 9) MUST = ZS
7. LOAD FREEZESTAT IS 33° AND SENSES WATER LEAVING THE LOAD COIL. SOURCE FREEZESTAT IS 21° AND SENSES WATER LEAVING THE SOURCE COIL.

NOTES:
STANDARD CONTROLS:
HIGH PRESSURE SWITCH (HPS)
LOSS OF CHARGE SWITCH (LOCS)
LOAD FREEZESTAT (LFS)
SOURCE FREEZESTAT (SFS)
ANTI-SHORT CYCLE TIMER (ASCT)

REV	DESCRIPTION	BY	PCN	DATE	APPROVED
	DATED DECODER TO MATCH CURRENT REV LEVEL	JMC	98-0267	05/30/98	N H
	DED "Y" TO REVISION CODE	JMC	U11469	02/10/97	BM
	NTROL OPTION ZM WAS VER 8.4 ONLY; ADDED	RSS	U10736	1/10/96	BM
	NI) TO LOAD WATER COIL OPTION V				
	VISED DIGIT 8,9 DELETED NOTE 7	JFK	C10627	11/09/95	BM
	VISED DIGIT ENCY				
F	CHANGED NOTE 1 FROM NON-UL,NON-CSA REMOVED NOTE 7	JFK	C10627	11/09/95	BM
E	ADDED CLASS CODE, & U & V TO DIGIT 6, & REVISED DIGIT 12	TW	U10243	02/28/95	BM
D	ADDED NOTES 4,5	JMT	U9360	9/8/93	JN
C	ADDED NOTES 1,2,3.	BL	U9144	4/14/93	JN
B	CHANGED TITLE & ADDED LETTER V TO LOAD WATER COIL	KB	U8534	5/6/92	JN
A	REVISED DECODER SHEET	TW	U8512	4/27/92	JN

UNLESS SPECIFIED OTHERWISE DIMENSIONS ARE IN INCHES TOLERANCES ON DECIMALS = ±0.01 ANGLES = ±1°

MATERIAL:

ClimateMaster 7300 SW 44th OKLA. CITY, OK 73179

TITLE: WATER to WATER UNIT DECODING EXTENDED RANGE LOW TEMPERATURE 25°F - 110°F

DRAWN: AP DATE: 3/4/92 DRAWING NO: 69169107

ENG: JN DATE: 3/4/92 C.A.D. NO: 6916910

ISSUED: U8184 DATE: 3/4/92 SCALE: .500 SHEET 1

LARGE BELT DRIVE | TC BELT DRIVE

DRAWING: **Decoder WL**

Z4B

1 2	3	4 5 6	7	8	9	10	11	12	13 14	15
WL	H	096	B	G	C	3	A	A	LS	S

MODEL TYPE
GL = GENESIS LARGE COMMERCIAL

CONFIGURATION
H = HORIZONTAL (NON PAINTED)
V = VERTICAL (PAINTED POLARICE)

UNIT SIZE
072 - (GLH)
096 - (GLH)
120 - (GLH)
080 - (GLV)
100 - (GLV)
120 - (GLV)
160 - (GLV)
200 - (GLV)
240 - (GLV)
300 - (GLV)

REVISION LEVEL
A = CURRENT REVISION FOR GLV
B = CURRENT REVISION FOR GLH

VOLTAGE
H = 208-230/60/3 - R22 (Factory wired 208V)
F = 460/60/3 - R22
N = 575/60/3 - R22 (Not Available GLH072)
U = 380-420/50/3 - R22 (Factory wired 380V) (2)
S = 380-420/50/3 - R407C (Factory wired 380V) (4)

CONTROLS
C = CXM (CSA/NRTL for USA & CANADA)
D = DXM (CSA/NRTL for USA & CANADA)
L = CXM w/LON (CSA/NRTL for USA & CANADA)
M = DXM w/LON (CSA/NRTL for USA & CANADA)
N = CXM w/MPC (CSA/NRTL for USA & CANADA)
P = DXM w/MPC (CSA/NRTL for USA & CANADA)

F = CXM (CE for EUROPE)
G = DXM (CE for EUROPE)
H = CXM w/LON (CE for EUROPE)
J = DXM w/LON (CE for EUROPE)
T = CXM w/MPC (CE for EUROPE)
U = DXM w/MPC (CE for EUROPE)
} "S" VOLTAGE ONLY

CABINET INSULATION
1 = EXTENDED RANGE
2 = EXTENDED RANGE w/ULTRA QUIET
3 = STANDARD RANGE
4 = STANDARD RANGE w/ULTRA QUIET

BLOWER DRIVE PACKAGE (3)
A = STANDARD RPM & STANDARD MOTOR (AVAILABLE ALL)
B = LOW RPM & STANDARD MOTOR (AVAILABLE ALL)
C = HIGH RPM & STANDARD MOTOR (NOT AVAILABLE GLH120)
D = STANDARD RPM & LARGE MOTOR (AVAILABLE GLH096 & GLH120 ONLY)
E = HIGH RPM & LARGE MOTOR (NOT AVAILABLE GLV160 & GLV300)

HEAT EXCHANGER OPTIONS
A = Copper Water Coil w/E-Coated Air Coil
C = Copper Water Coil w/Non-Coated Air Coil
J = Cupro-Nickel Water Coil w/E-Coated Air Coil
N = Cupro-Nickel Water Coil w/Non-Coated Air Coil

AIR FLOW OPTIONS
LS = LEFT RETURN/STRAIGHT SUPPLY (GLH ONLY)
BF = BACK RETURN/FRONT SUPPLY (GLV080 thru 240)
BT = BACK RETURN/TOP SUPPLY (GLV080 thru 300)
FB = FRONT RETURN/BACK SUPPLY (GLV080 thru 240)
FT = FRONT RETURN/TOP SUPPLY (GLV080 thru 300)

S = STANDARD

NOTES:
1. 75 VA TRANSFORMER STANDARD.
2. "U" VOLTAGE HAS NO AGENCY APPROVAL.
3. REFER TO THE BLOWER PERFORMANCE TABLES IN THE SPEC CATALOG TO DETERMINE THE CORRECT DRIVE PACKAGE.
4. DIGIT 9 MUST HAVE "CE" AGENCY APPROVAL.

REV	DESCRIPTION	BY	ECN	DATE	APPROVED
-		--	--------	--/--/--	--
-	-	--	--------	--/--/--	--
-	-	--	--------	--/--/--	--
-	-	--	--------	--/--/--	--
-	-	--	--------	--/--/--	--
-	INITIAL RELEASE	TM	05-0029	2/03/05	MF

CLIMATEMASTER

DESCRIPTION: Decoder WL

DRAWN	DATE	ENG	DATE
TM	2/3/05	MF	2/3/05

ISSUED	DATE	DWG #	REV	SHEET
05-0029	2/3/05	Decoder WL	A	1 of 1