CLIMATEMASTER®
A NIBE GROUP MEMBER

Trilogy® Variable (VE) Series

97B0119N01

Residential Horizontal, Vertical & Downflow Packaged Geothermal Heat Pumps

Installation, Operation & Maintenance Instructions

Rev.: June 26, 2023

Table of Contents

Model Nomenclature	3	ECM Blower Performance Data	33
General Information	4	System Configuration	34
Vertical Installation	5	Unit Commissioning and Operating Conditions	39
Horizontal Installation	7	Operating and Commissioning Limits	39
Condensate and Water Connection	11	Unit Start-Up Procedure	41
vFlow® Heat Pump Applications Overview	12	Unit Operating Conditions	42
Closed Loop Heat Pump Applications w/Internal Flow Controller	13	Performance Tables Legend	43
		Performance Data - 0930 - Heating	44
Flushing the Earth Loop	15	Performance Data - 0930 - Cooling	46
Multiple Unit Piping and Flushing	18	Performance Data - 1860 - Heating	48
Ground-Loop Heat Pump Applications	21	Performance Data - 1860 - Cooling	50
Water Quality Requirements	23	Preventive Maintenance	52
Electrical – Line Voltage	26	Troubleshooting	53
Electrical – Low Voltage Wiring	27	Refrigeration Troubleshooting Form - Heating	64
Electrical – Thermostat Wiring	29	Refrigeration Troubleshooting Form - Cooling	66
EXM Wiring Diagrams	30	Warranty	68
ECM Blower Control	32	Revision History	72

This page was intentionally left blank.

Model Nomenclature: General Overview

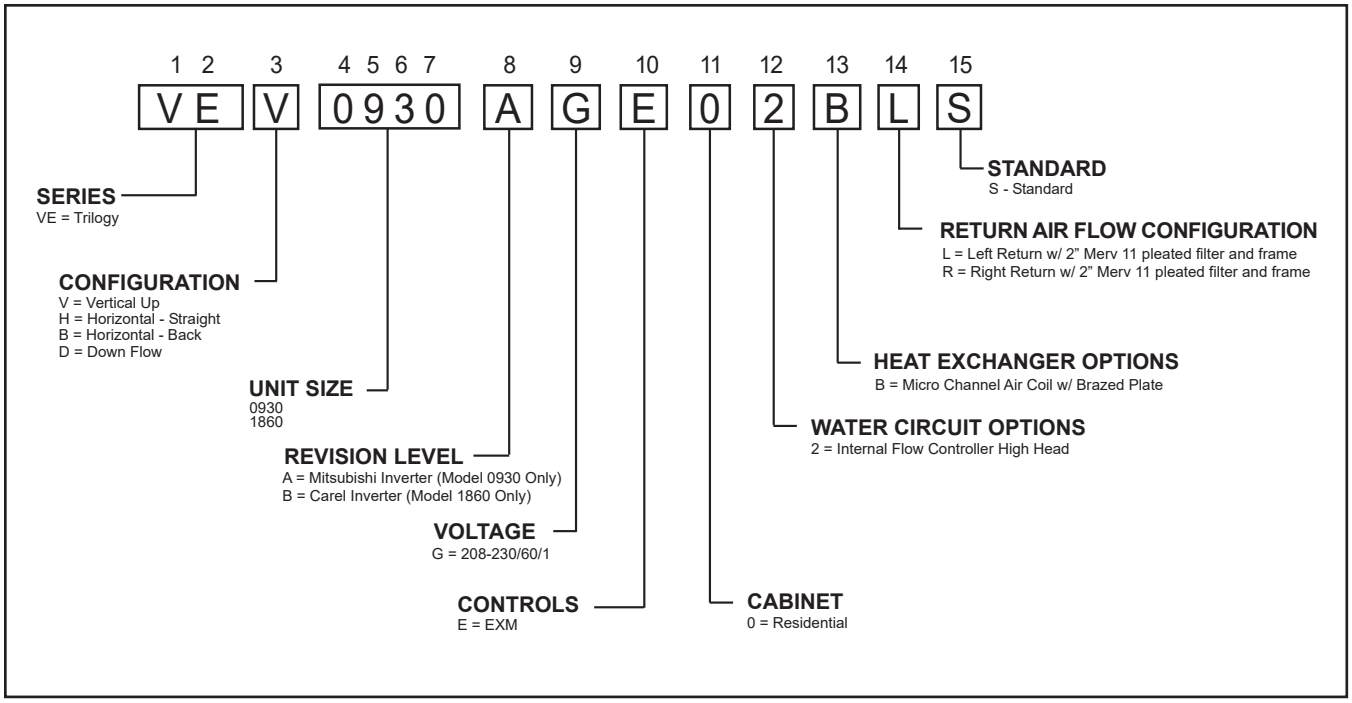

NOTE: Above model nomenclature is a general reference. Consult individual specification sections for detailed information.

SAFETY

Warnings, cautions and notices appear throughout this manual. Read these items carefully before attempting any installation, service, or troubleshooting of the equipment.

DANGER: Indicates an immediate hazardous situation, which if not avoided will result in death or serious injury. DANGER labels on unit access panels must be observed.

WARNING: Indicates a potentially hazardous situation, which if not avoided could result in death or serious injury.

CAUTION: Indicates a potentially hazardous situation or an unsafe practice, which if not avoided could result in minor or moderate injury or product or property damage.

NOTICE: Notification of installation, operation or maintenance information, which is important, but which is not hazard-related.

⚠ WARNING! ⚠

WARNING! The EarthPure® Application and Service Manual should be read and understood before attempting to service refrigerant circuits with HFC-410A.

⚠ WARNING! ⚠

WARNING! To avoid the release of refrigerant into the atmosphere, the refrigerant circuit of this unit must be serviced only by technicians who meet local, state, and federal proficiency requirements.

⚠ WARNING! ⚠

WARNING! All refrigerant discharged from this unit must be recovered WITHOUT EXCEPTION. Technicians must follow industry accepted guidelines and all local, state, and federal statutes for the recovery and disposal of refrigerants. If a compressor is removed from this unit, refrigerant circuit oil will remain in the compressor. To avoid leakage of compressor oil, refrigerant lines of the compressor must be sealed after it is removed.

⚠ CAUTION! ⚠

CAUTION! To avoid equipment damage, DO NOT use these units as a source of heating or cooling during the construction process. The mechanical components and filters can quickly become clogged with construction dirt and debris, which may cause system damage and void product warranty.

General Information

INSPECTION
Upon receipt of the equipment, carefully check the shipment against the bill of lading. Make sure all units and accessories have been received. Inspect the packaging of each unit, and inspect each unit for damage. Insure that the carrier makes proper notation of any shortages or damage on all copies of the freight bill and completes a common carrier inspection report. Concealed damage not discovered during unloading must be reported to the carrier within 15 days of receipt of shipment. If not filed within 15 days, the freight company can deny the claim without recourse. **Note: It is the responsibility of the purchaser to file all necessary claims with the carrier.** Notify your equipment supplier of all damage within fifteen (15) days of shipment.

STORAGE
Equipment should be stored in its original packaging in a clean, dry area. Store units in an upright position at all times. Stack units a maximum of 3 units high.

UNIT PROTECTION
Cover units on the job site with either the original packaging or an equivalent protective covering. Cap the open ends of pipes stored on the job site. In areas where painting, plastering, and/or spraying has not been completed, all due precautions must be taken to avoid physical damage to the units and contamination by foreign material. Physical damage and contamination may prevent proper start-up and may result in costly equipment clean-up.

Examine all pipes, fittings, and valves before installing any of the system components. Remove any dirt or debris found in or on these components.

PRE-INSTALLATION
Installation, Operation, and Maintenance instructions are provided with each unit. Horizontal equipment is designed for installation in an attic or crawl space. Other unit configurations are typically installed in a mechanical closet or basement. The installation site chosen should include adequate service clearance around the unit. Before unit start-up, read all manuals and become familiar with the unit and its operation. Thoroughly check the system before operation.

PREPARE UNITS FOR INSTALLATION AS FOLLOWS:
1. Compare the electrical data on the unit nameplate with ordering and shipping information to verify that the correct unit has been shipped.
2. Keep the cabinet covered with the original packaging until installation is complete and all plastering, painting, etc. is finished.
3. Verify refrigerant tubing is free of kinks or dents and that it does not touch other unit components.
4. Inspect all electrical connections. Connections must be clean and tight at the terminals.
5. Remove any blower support packaging (water-to-air units only).
6. Locate and verify any hanger, or other accessory kit located in the compressor section or blower section.

⚠ CAUTION! ⚠

CAUTION! DO NOT store or install units in corrosive environments or in locations subject to temperature or humidity extremes (e.g., rooftops, etc. See Tables 10a and 10b for acceptable temperature ranges). Corrosive conditions and high temperature or humidity can significantly reduce performance, reliability, and service life. Always move and store units in an upright position. Tilting units on their sides may cause equipment damage.

⚠ CAUTION! ⚠

CAUTION! CUT HAZARD - Failure to follow this caution may result in personal injury. Sheet metal parts may have sharp edges or burrs. Use care and wear appropriate protective clothing, safety glasses and gloves when handling parts and servicing heat pumps.

DUCT SYSTEM INSTALLATION
The duct system should be sized to handle the design airflow quietly. Refer to Figure 6 for horizontal duct system details or Figure 1 for vertical duct system details. A flexible connector is recommended for both discharge and return air duct connections on metal duct systems to eliminate the transfer of vibration to the duct system. To maximize sound attenuation of the unit blower, the supply and return plenums should include internal fiberglass duct liner or be constructed from ductboard for the first few feet. Application of the unit to uninsulated ductwork in an unconditioned space is not recommended, as the unit's performance will be adversely affected.

At least one 90° elbow should be included in the supply duct to reduce air noise. If air noise or excessive air flow is a problem, the blower speed can be changed. For airflow charts, consult catalog specifications for the series and model of the specific unit.

If the unit is connected to existing ductwork, a previous check should have been made to insure that the ductwork has the capacity to handle the airflow required for the unit. If ducting is too small, as in the replacement of a heating only system, larger ductwork should be installed. All existing ductwork should be checked for leaks and repaired as with the Trilogy's variable capacity and variable air flow duct and register sizing is crucial for proper air delivery and throw while maintaining acceptable sound levels.

The installation of geothermal heat pump units and all associated components, parts and accessories which make up the GHP system shall be in accordance with the regulations of ALL authorities having jurisdiction and MUST conform to all applicable codes. It is the responsibility of the installing contractor to determine and comply with ALL applicable codes and regulations.

Vertical Installation

VERTICAL UNIT LOCATION

Packaged units are not designed for outdoor installation. Locate the unit in an INDOOR area that allows enough space for service personnel to perform typical maintenance or repairs without removing the unit from the installed location. Vertical units are typically installed in a mechanical closet or basement. Never install units in areas subject to freezing or where humidity levels could cause cabinet condensation (such as unconditioned spaces subject to 100% outside air). Also, provide sufficient room to make water, electrical, and duct connection(s).

If the unit is located in a confined space, such as a closet, provisions must be made for return air to freely enter the space by means of a louvered door or other method. Any access panel screws that would be difficult to remove after the unit is installed should be removed prior to setting the unit. Refer to Figures 1 and 2 for typical installation illustrations. Refer to unit catalog specifications for dimensional data.

1. Install the unit on a piece of rubber, neoprene or other mounting pad material for sound isolation. The pad should be at least 3/8" [10 mm] to 1/2" [13 mm] in thickness. Extend the pad beyond all four edges of the unit.
2. Do not block filter access with piping, conduit or other materials. Refer to unit catalog specifications for dimensional data.
3. Provide access to water valves and fittings and screwdriver access to the unit side panels, discharge collar and all electrical connections.

Figure 1: Vertical Unit Mounting Using Ducted Return

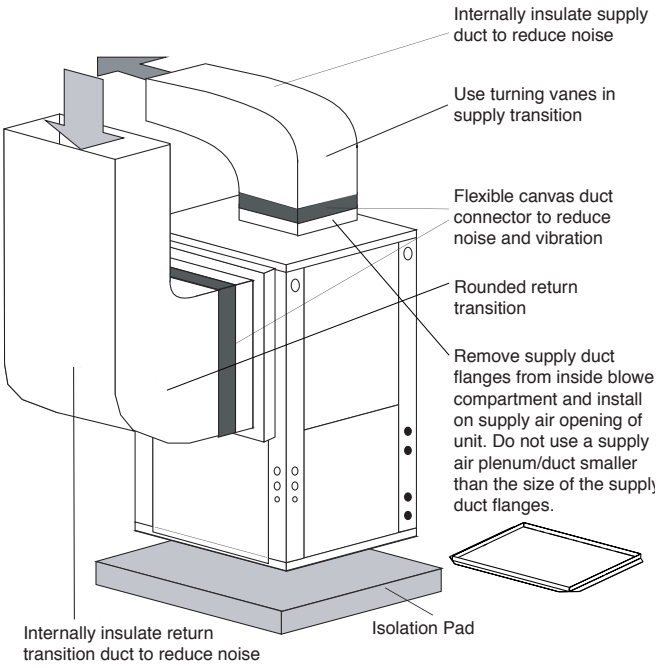

SOUND ATTENUATION FOR VERTICAL UNITS

Sound attenuation is achieved by enclosing the unit within a small mechanical room or a closet. Additional measures for sound control include the following:

1. If free return, mount the unit so that the return air inlet is 90° to the return air grille (refer to Figure 2). Install a sound baffle as illustrated to reduce line-of sight sound transmitted through return air grilles.
2. Mount the unit on a Unit Isolation Pad to minimize vibration transmission to the building structure. For more information on Unit Isolation Pads, contact your distributor.

Figure 2: Vertical Sound Attenuation - Free Return

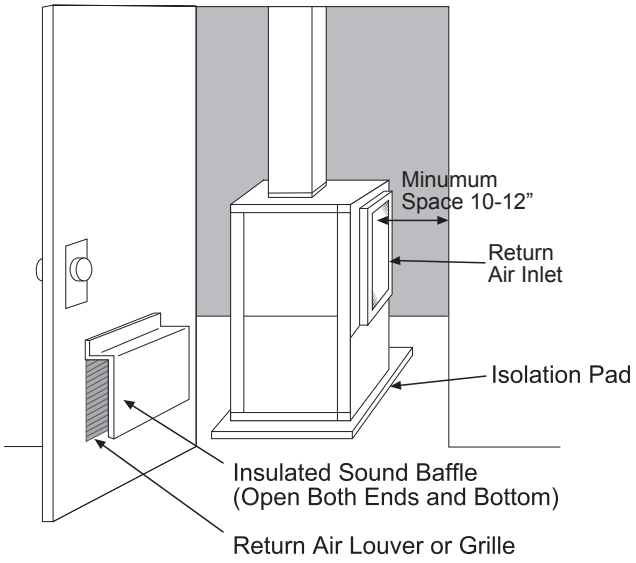

Vertical Installation

Figure 3: Vertical Service Access

Vertical Units

Left Return

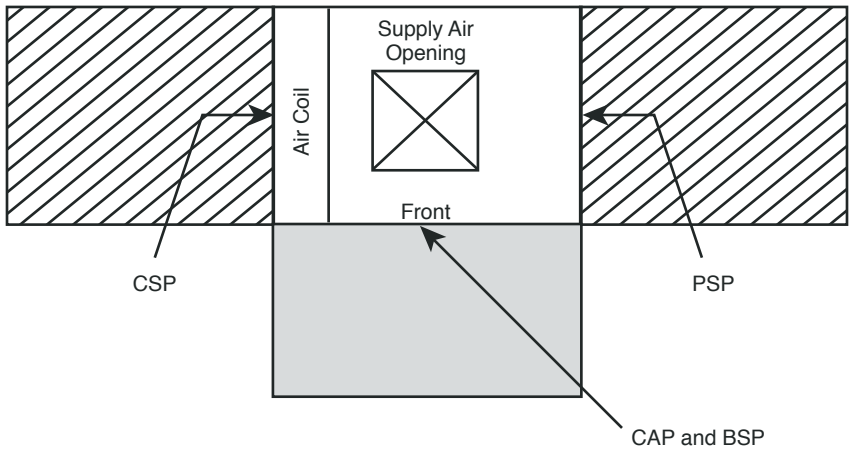

Right Return

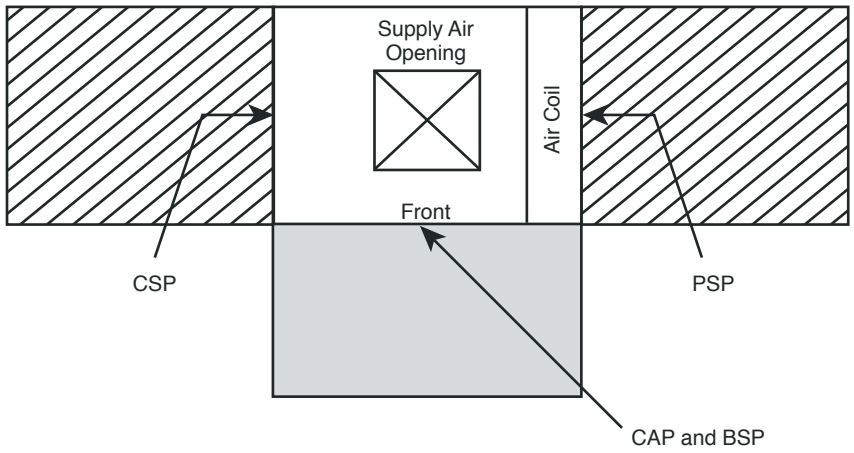

= mandatory 2′ service access

= (optional) additional 2′ service access

NOTES:
1. While clear access to all removable panels is not required, installer should take care to comply with all building codes and allow adequate clearance for future field service.
2. Front & Side access is preferred for improved service access. However, side access is not required if it is acceptable to slide the unit forward into the open if a compressor, pump volute, or heat exchanger replacement is required.
3. Top supply air is shown, the same clearances apply to bottom supply air units.

LEGEND:
CAP = Control/Compressor Access Panel
BSP = Blower Service Panel
CSP = Compressor Service Panel
PSP = Pump and Flow Meter Service Panel

Horizontal Installation

HORIZONTAL UNIT LOCATION

Packaged units are not designed for outdoor installation. Locate the unit in an INDOOR area that allows enough space for service personnel to perform typical maintenance or repairs without removing unit from the ceiling. Horizontal units are typically installed in an attic or crawl space. Never install units in areas subject to freezing or where humidity levels could cause cabinet condensation (such as unconditioned spaces subject to 100% outside air). Consideration should be given to access for easy removal of the filter and access panels. Provide sufficient room to make water, electrical, and duct connection(s).

If the unit is located in a confined space, such as a closet, provisions must be made for return air to freely enter the space by means of a louvered door or return duct. Any access panel screws that would be difficult to remove after the unit is installed should be removed prior to setting the unit. Refer to Figure 6 for an illustration of a typical installation. Refer to unit catalog specifications for dimensional data.

Conform to the following guidelines when selecting a unit location:

1. Provide a hinged access door in concealed-spline or plaster ceilings. Provide removable ceiling tiles in T-bar or lay-in ceilings. Refer to horizontal unit dimensions for specific series and model in unit catalog specifications. Size the access opening to accommodate the service technician during the removal or replacement of the compressor and the removal or installation of the unit itself.
2. Provide access to hanger brackets, water valves and fittings. Provide screwdriver clearance to access panels, discharge collars and all electrical connections.
3. DO NOT obstruct the space beneath the unit with piping, electrical cables and other items that prohibit future removal of components or the unit itself.
4. Use a manual portable jack/lift to lift and support the weight of the unit during installation and servicing.

Figure 4: Hanger Bracket

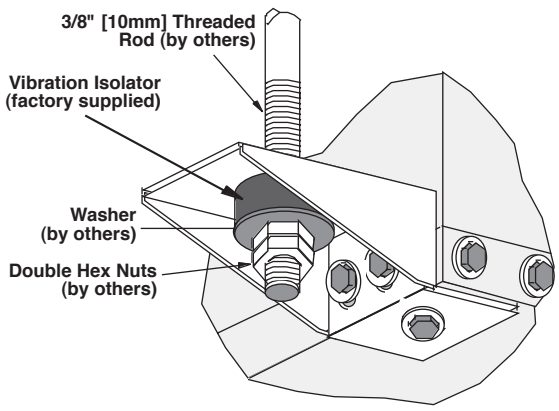

MOUNTING HORIZONTAL UNITS

Horizontal units have hanger kits pre-installed from the factory as shown in Figure 4. Figure 6 shows a typical horizontal unit installation.

Horizontal heat pumps are typically suspended above a ceiling or within a soffit using field supplied, threaded rods sized to support the weight of the unit.

Use four (4) field supplied threaded rods and factory provided vibration isolators to suspend the unit. Hang the unit clear of the floor slab above and support the unit by the mounting bracket assemblies only. DO NOT attach the unit flush with the floor slab above.

Pitch the unit toward the drain 1/4" to improve the condensate drainage. On small units (less than 2.5 Tons/ 8.8 kW) ensure that unit pitch does not cause condensate leaks inside the cabinet.

Horizontal units may also be installed on a base. When installed on a base or platform the horizontal unit should be set in a secondary drain pan on top of a vibration absorbing pad. This is required by many codes. The secondary drain pan prevents damage to the building structure by possible condensate overflow or water leakage.

NOTE: The top panel of a horizontal unit is a structural component. The top panel of a horizontal unit must never be removed from an installed unit unless the unit is properly supported from the bottom. Otherwise, damage to the unit cabinet may occur.

Horizontal Installation (Cont.)

Figure 5: Horizontal Service Access

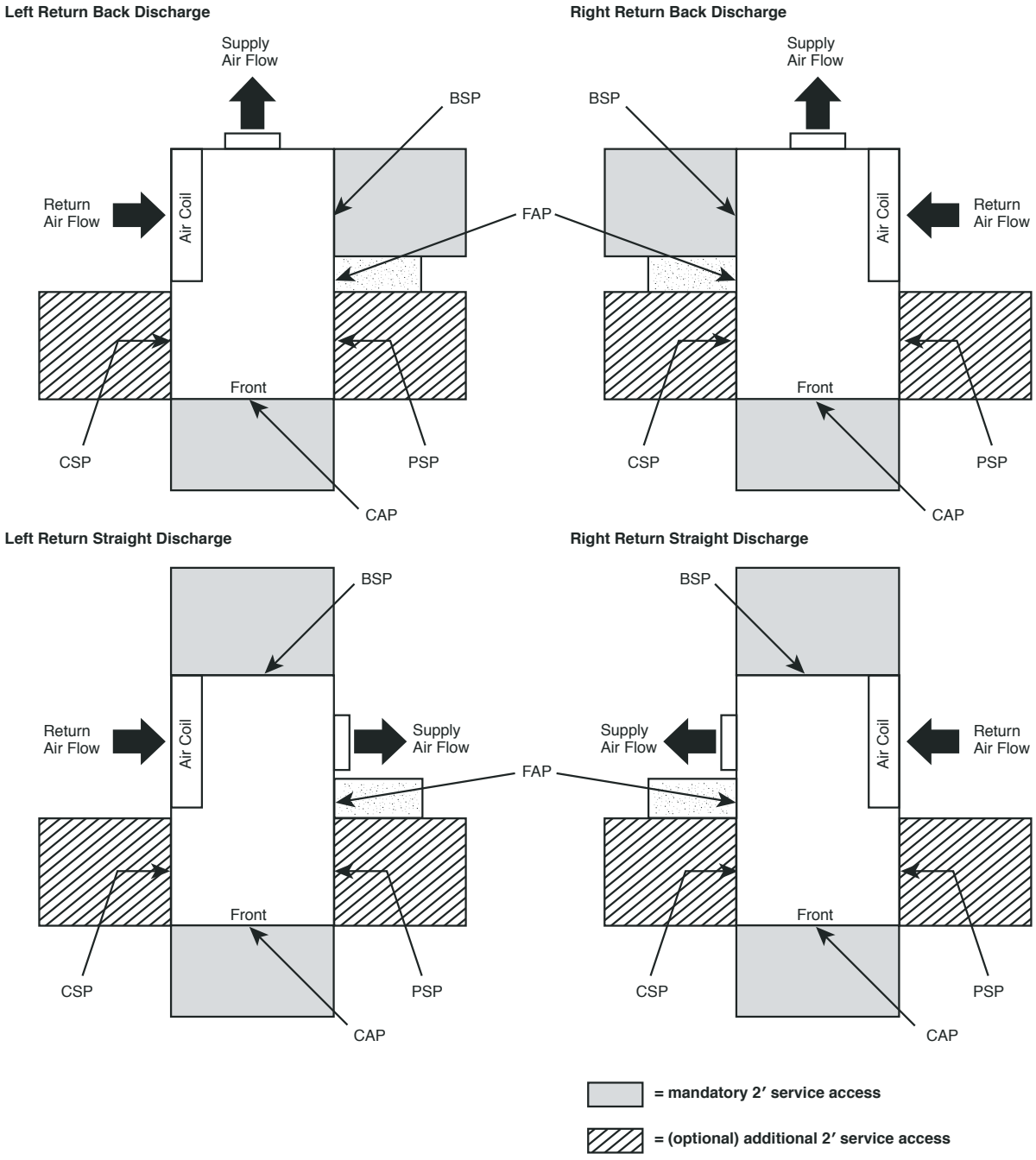

NOTES:

1. While clear access to all removable panels is not required, installer should take care to comply with all building codes and allow adequate clearance for future field service.
2. CCP and BSP requires 2' service access.
3. Blower service access is through back panel on straight discharge units or through panel opposite air coil on back discharge units.
4. Side access is not required if it is acceptable to drop the unit if major service such as compressor, pump volute, heat exchanger, or filter drier replacement is required.

LEGEND:

CAP = Control Access Panel
BSP = Blower Service Panel
CSP = Compressor Service Panel
PSP = Pump and Flow Meter Service Panel
FAP = Filter Drier Access Panel

Horizontal Installation (Cont.)

Figure 6: Typical Closed Loop Horizontal Unit Installation (with Internal Flow Controller)

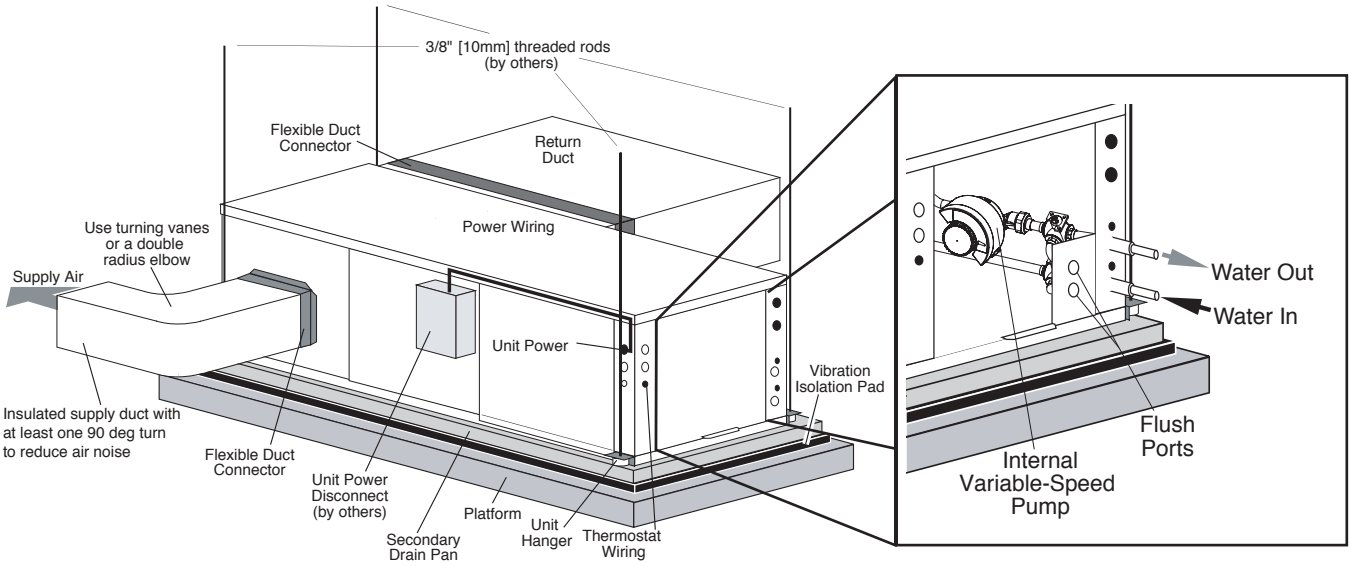

Horizontal Installation (Cont.)

Field Conversion of Air Discharge

OVERVIEW - Horizontal units can be field converted between side (straight) and back (end) discharge using the instructions below.

NOTE: It is not possible to field convert return air between left or right return models due to the necessity of refrigeration copper piping changes.

PREPARATION - It is best to field convert the unit on the ground before hanging. If the unit is already hung it should be taken down for the field conversion.

SIDE TO BACK DISCHARGE CONVERSION

1. Place unit in well lit area. Remove the screws as shown in Figure 7 to free top panel and discharge panel.
2. Lift out the access panel and set aside. Lift and rotate the discharge panel to the other position as shown, being careful with the blower wiring.
3. Check blower wire routing and connections for tension or contact with sheet metal edges. Reroute if necessary.
4. Check refrigerant tubing for contact with other components.
5. Reinstall top panel and screws noting that the location for some screws will have changed.
6. Manually spin the fan wheel to ensure that the wheel is not rubbing or obstructed.
7. Replace access panels.

BACK TO SIDE DISCHARGE CONVERSION - If the discharge is changed from back to side, use above instruction noting that illustrations will be reversed.

LEFT vs. RIGHT RETURN - It is not possible to field convert return air between left or right return models due to the necessity of refrigeration copper piping changes. However, the conversion process of side to back or back to side discharge for either right or left return configuration is the same. In some cases, it may be possible to rotate the entire unit 180 degrees if the return air connection needs to be on the opposite side. Note that rotating the unit will move the piping to the other end of the unit.

Figure 7: Left Return Side to Back

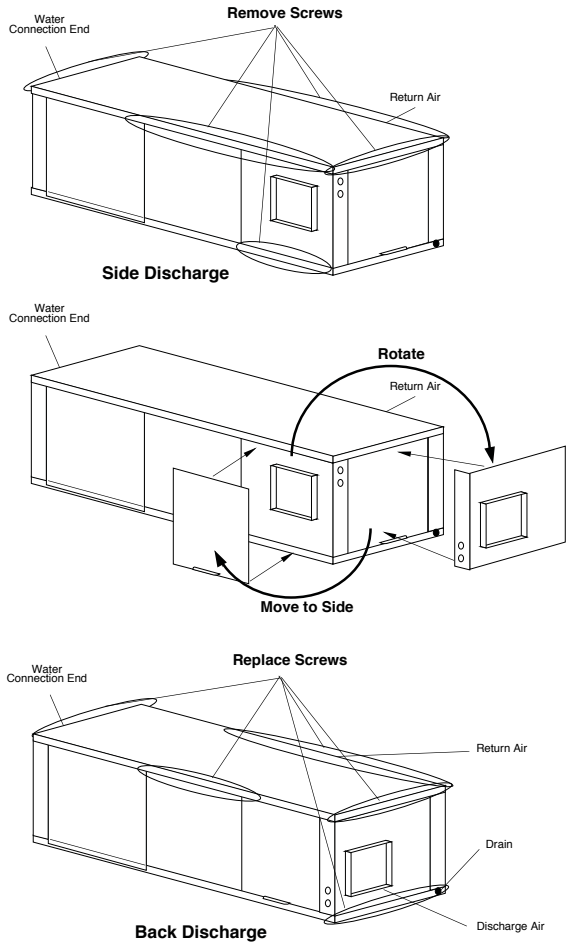

Figure 8: Right Return Side to Back

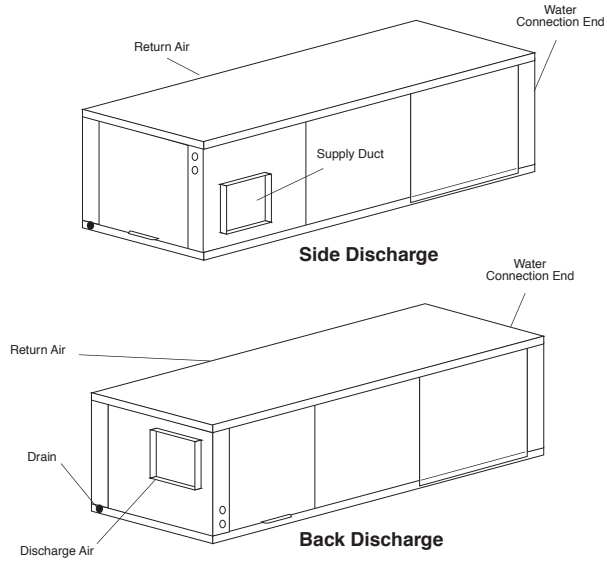

Condensate and Water Connection

CONDENSATE PIPING
Pitch the unit toward the drain to improve the condensate drainage.

Install condensate trap at each unit with the top of the trap positioned below the unit condensate drain connection as shown in Figure 9. Design the depth of the trap (water-seal) based upon the amount of External Static Pressure (ESP) capability of the blower (where 2 inches [51mm] of ESP capability requires 2 inches [51mm] of trap depth). As a general rule, 1-1/2 inch [38mm] trap depth is the minimum.

Each unit must be installed with its own individual trap and connection to the condensate line (main) or riser. Provide a means to flush or blow out the condensate line. DO NOT install units with a common trap and/or vent.

Always vent the condensate line when dirt or air can collect in the line or a long horizontal drain line is required. Also vent when large units are working against higher external static pressure than other units connected to the same condensate main since this may cause poor drainage for all units on the line. WHEN A VENT IS INSTALLED IN THE DRAIN LINE, IT MUST BE LOCATED AFTER THE TRAP IN THE DIRECTION OF THE CONDENSATE FLOW.

Figure 9: Condensate Connection

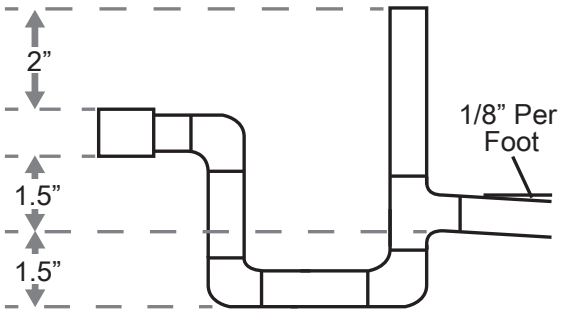

⚠ CAUTION! ⚠

CAUTION! Ensure condensate line is pitched toward drain 1/8 inch per ft [11 mm per m] of run.

WATER CONNECTIONS - RESIDENTIAL (DISTRIBUTOR) MODELS
Residential models utilize swivel piping fittings for water connections that are rated for 450 psi (3101 kPa) operating pressure. **(NOTE that units with an internal variable-speed pump and flow meter have a maximum pressure rating of 100 PSI [689 kPa]). Pressure in excess of 100 PSI (689 kPa) will damage the unit.** The connections have a rubber gasket seal similar to a garden hose gasket, which when mated to the flush end of most 1” threaded male pipe fittings provides a leak-free seal without the need for thread sealing tape or joint compound. Check for burrs and ensure that the rubber seal is in the swivel connector prior to attempting any connection (rubber seals are shipped attached to the swivel connector). DO NOT OVER TIGHTEN or leaks may occur.

The female locking ring is threaded onto the pipe threads which holds the male pipe end against the rubber gasket, and seals the joint. HAND TIGHTEN ONLY! DO NOT OVERTIGHTEN!

Figure 10: Water Connections

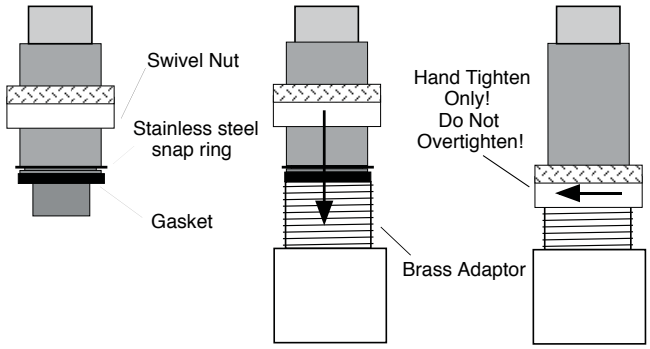

vFlow® Heat Pump Applications Overview

vFlow® is a revolutionary new, intelligent, and efficient way to circulate water (or water plus antifreeze) using INTERNAL, variable water flow control. The factory-installed high-efficiency variable-speed pump uses 60%-80% less wattage than a traditional fixed speed pump. vFlow technology improves performance of the unit by reducing the amount of energy required to optimize the flow of water throughout a GHP System and also reduces the space, cost, and labor required to install external water flow control mechanisms (flow controllers, solenoid and flow control valves).

vFlow® CONFIGURATION:

INTERNAL FLOW CONTROLLER - FOR CLOSED LOOP APPLICATIONS

This is the most common configuration for closed loops. With this factory-installed standard option, the unit is built with an Internal Variable Speed Pump and other components to flush and operate the unit correctly (including an expansion tank, flush ports and flushing valves). The pump speed is controlled by the EXM control based on the difference in entering and leaving water temperatures (ΔT). The Internal Flow Controller pump includes an internal check valve for multiple unit installations.

NOTE: Internal Flow Controllers are also very suitable for multiple unit installations depending on pump performance requirements.

Details are included in the following sections on ground loop applications.

Figure 11: Typical Closed-Loop Application (with Internal Flow Controller Shown)

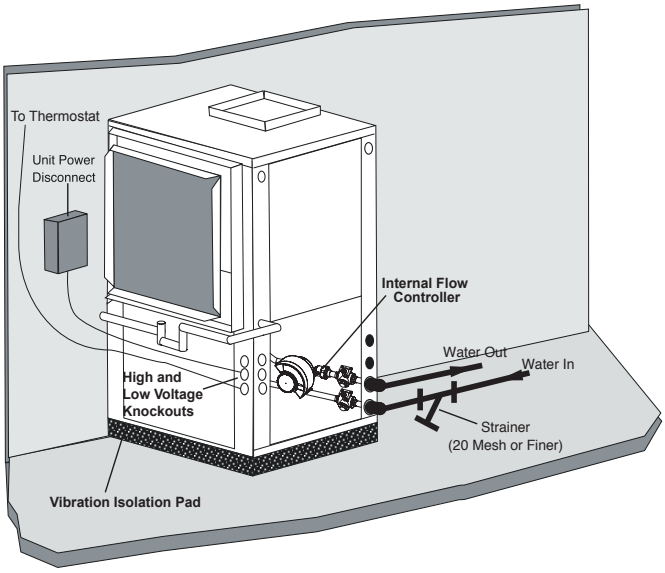

⚠ CAUTION! ⚠

CAUTION! The following instructions represent industry accepted installation practices for closed loop earth coupled heat pump systems. Instructions are provided to assist the contractor in installing trouble free ground loops. These instructions are recommendations only. State/provincial and local codes MUST be followed and installation MUST conform to ALL applicable codes. It is the responsibility of the installing contractor to determine and comply with ALL applicable codes and regulations.

Closed Loop Heat Pump Applications with Internal Flow Controller

Units with internal flow control come with a built-in variable speed pump, an expansion tank, flushing ports and three-way valves (used to flush the unit). The variable speed pump is controlled by the EXM board based on the difference between the entering and leaving water temperature (ΔT). For operation outside of the normal entering water temperature range (50° or 60°F - 110°F for cooling, 30°F-70°F for heating) the EXM controller automatically adjusts the control ΔT to account for the abnormal entering water temperatures, maintaining an appropriate flow rate for proper unit operation. When entering water temperatures are abnormally low for cooling, or abnormally high for heating, the EXM controller will maintain suction and discharge pressures within the normal operating envelope of the compressor which will allow the unit to operate properly under those conditions. The internal expansion tank helps to maintain constant loop pressure despite the natural expansion and contraction of the loop as the seasons and loop temperatures vary to help avoid flat loop callbacks.

PRE-INSTALLATION
Prior to installation, locate and mark all existing underground utilities, piping, etc. Install loops for new construction before sidewalks, patios, driveways, and other construction has begun. During construction, accurately mark all ground loop piping on the plot plan as an aid in avoiding potential future damage to the installation.

PIPING INSTALLATION
The typical closed loop ground source system is shown in Figures 6 and 11. All earth loop piping materials should be limited to polyethylene fusion only for in-ground sections of the loop and it is also recommended for inside piping. Galvanized or steel fittings should not be used at any time due to their tendency to corrode. All plastic to metal threaded fittings should be avoided due to their potential to leak in ground loop applications. Loop temperatures can range between 25 and 110°F [-4 to 43°C]. Flow rates between 2.25 and 3 gpm per ton [2.41 to 3.23 l/m per kW] of cooling capacity is recommended in these applications.

Test individual horizontal loop circuits before backfilling. Test vertical U-bends and pond loop assemblies prior to installation. Pressures of at least 100 psi [689 kPa] should be used when testing the ground loop. Do not exceed the pipe pressure rating. Test entire ground loop when all loops are assembled.

Never exceed 100 psig pressure in a Trilogy unit.

Exceeding 100 psig in a Trilogy unit will damage the internal pressure sensor. If pressure greater than 100 psig are desired for loop/piping testing the Trilogy unit must be isolated from that pressure by manual shut-off valves during pressure testing.

The following section will help to guide you through flushing a unit with internal flow control.

⚠ NOTICE! ⚠

NOTICE! If installing MULTIPLE vFlow® Internal Variable Speed Flow Controller units (in parallel) on one loop, please refer to section 'Multiple Unit Piping and Flushing' (later in this document).

Figure 12: Internal Flow Controller

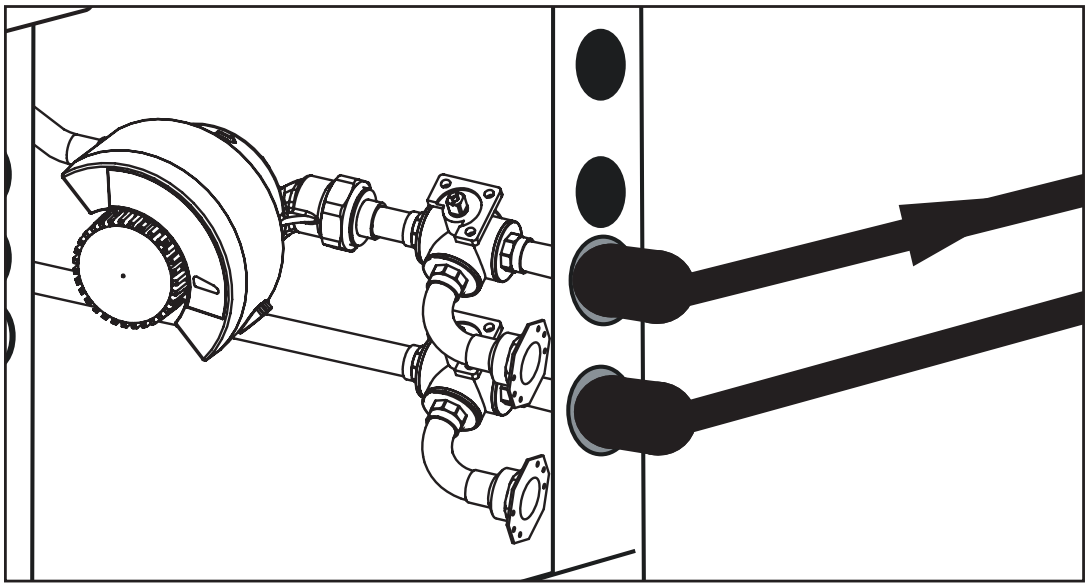

Closed Loop Heat Pump Applications with Internal Flow Controller (Cont.)

Figure 13a: High Head Variable Pump with Check Valve

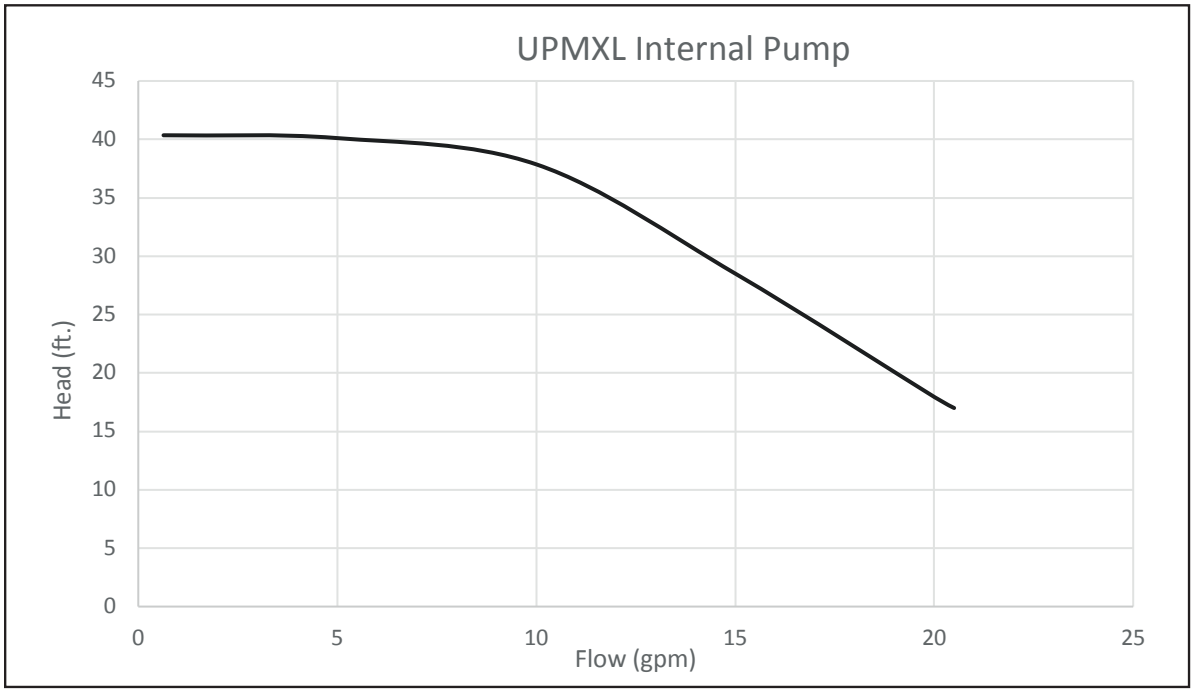

Flushing the Earth Loop

Once piping is completed between the unit and the ground loop, final purging and charging of the loop is needed.

A flush cart (at least a 1.5 hp [1.1kW] pump) is needed to achieve adequate flow velocity in the loop to purge air and dirt particles from the loop itself. Antifreeze solution is used in most areas to prevent freezing. Antifreeze should be used where piping passes through an area that may drop below freezing or any time the LWT of the unit may drop below 40°F. All air and debris must be removed from the earth loop piping system before operation. **Flush the loop with a high volume of water at a high velocity (2 fps [0.6 m/s] in all piping)** using a filter or flush bag in the loop return line of the flush cart to eliminate debris from the loop system. Filtration of at least 100 microns should be used during the flushing process to ensure any debris that might clog/damage the heat exchanger or pump is removed. See Table 1 for flow rate required to attain 2fps [0.6 m/s]. The steps below must be followed for proper flushing.

Table 1: Minimum Flow Required to Achieve 2 ft/sec variety

PE Pipe Size	Flow (GPM)
3/4"	4 [4.3 L/M per KW]
1"	6 [6.5 L/M per KW]
1 1/4"	10 [10.8 L/M per KW]
1 1/2"	13 [14.0 L/M per KW]
2"	21 [22.6 L/M per KW]

Units with internal variable speed pumps also include a check valve internal to the pump. It is not possible to flush backwards through this pump. Care must be taken to connect the flush cart hoses so that the flush cart discharge is connected to the “water in” flushing valve of the heat pump.

LOOP FILL
Fill loop (valve position A, see Figure 15a) with water from a garden hose through flush cart before using flush cart pump to ensure an even fill and increase flushing speed. When water consistently returns back to the flush reservoir, switch to valve position B (figure 15b) to fill the unit.

Figure 14a: Typical Cleanable Flush Cart Strainer (100 mesh [0.149 mm])

⚠ WARNING! ⚠

WARNING! Disconnect electrical power source to prevent injury or death from electrical shock.

Figure 14b: Cam Fittings for Flush Cart Hoses

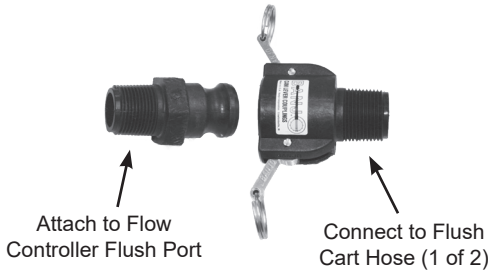

Isolate expansion tank during the flushing procedure using the ball valve. During dead heading of flush cart pump, isolation will prevent compression of bladder in the expansion tank and flush cart fluid level dropping below available capacity.

NOTICE: A hydrostatic pressure test is required on ALL piping, especially underground piping before final backfill per IGSHPA and the pipe manufacturers recommendations.

⚠ CAUTION! ⚠

CAUTION! Never exceed a pressure of 100 psig in a Trilogy unit. Pressure greater than 100 psig will damage the unit pressure sensor causing the unit to miscommunicate certain data points and may cause the unit to nuisance fault.

Figure 15a: Valve Position A - Loop Fill/Flush

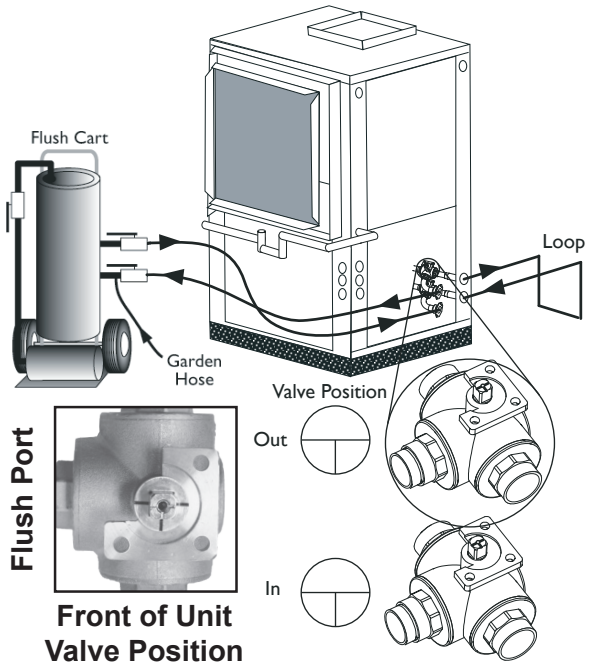

Flushing the Earth Loop (Cont.)

UNIT FILL
Unit fill valves should be switched to Position B to fill the unit heat exchanger (see Figure 15b). The valves position should be maintained until water is consistently returned into the flush reservoir.

⚠ CAUTION! ⚠

CAUTION! Never exceed a pressure of 100 psig in a Trilogy unit. Pressure greater than 100 psig will damage the unit pressure sensor causing the unit to miscommunicate certain data points and may cause the unit to nuisance fault.

Figure 15b: Valve Position B - Unit Fill

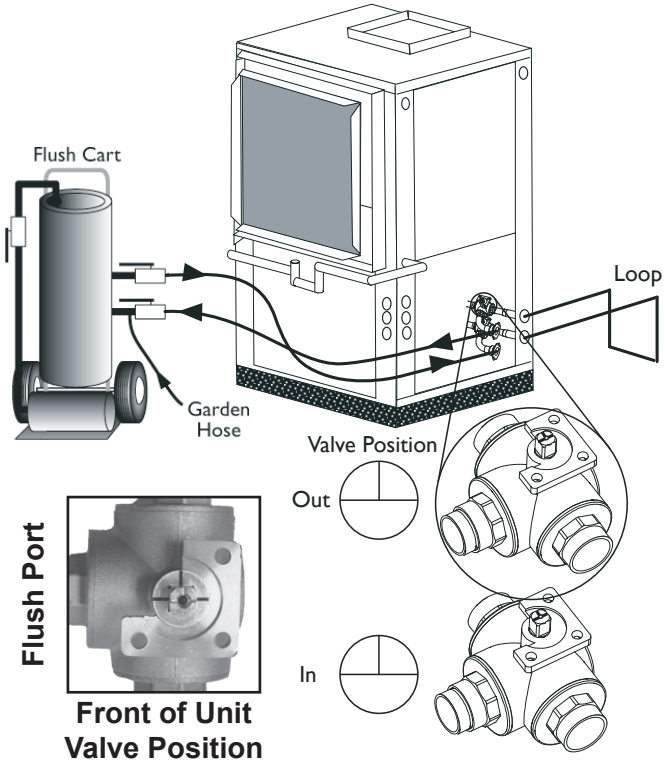

LOOP FLUSH
Switch to valve Position A. The supply water may be shut off and the flush cart turned on to begin flushing. Once the flush reservoir is full, do not allow the water level in the flush cart tank to drop below the pump inlet line or air can be pumped back out to the earth loop. Try to maintain a fluid level in the tank above the return tee so that air can not be continuously mixed back into the fluid. Surges of 50 psi [345 kPa] can be used to help purge air pockets by simply shutting off the flush cart return valve going into the flush cart reservoir. This process 'dead heads' the pump to 50 psi [345 kPa]. To dead head the pump until maximum pumping pressure is reached, open the valve back up and a pressure surge will be sent through the loop to help purge air pockets from the piping system. Notice the drop in fluid level in the flush cart tank. If all air is purged from the system, the level will drop only 3/8" in a 10" [25.4 cm] diameter PVC flush tank (about a half gallon [1.9 liters]) since liquids are incompressible. If the level drops more than this level, flushing should continue since air is still being compressed in the loop fluid. Do this a number of times.

NOTICE: Actual flushing time require will vary for each installation due to piping length, configuration, and flush cart pump capacity. 3/8" or less fluid level drop is the ONLY indication that flushing is complete.

Move valves to position C. By switching both valves to this position, water will flow through the loop and the unit heat exchanger. Finally, the dead head test should be checked again for an indication of air in the loop. Fluid level drop is your only indication of air in the loop.

Figure 15c: Valve Position C - Full Flush

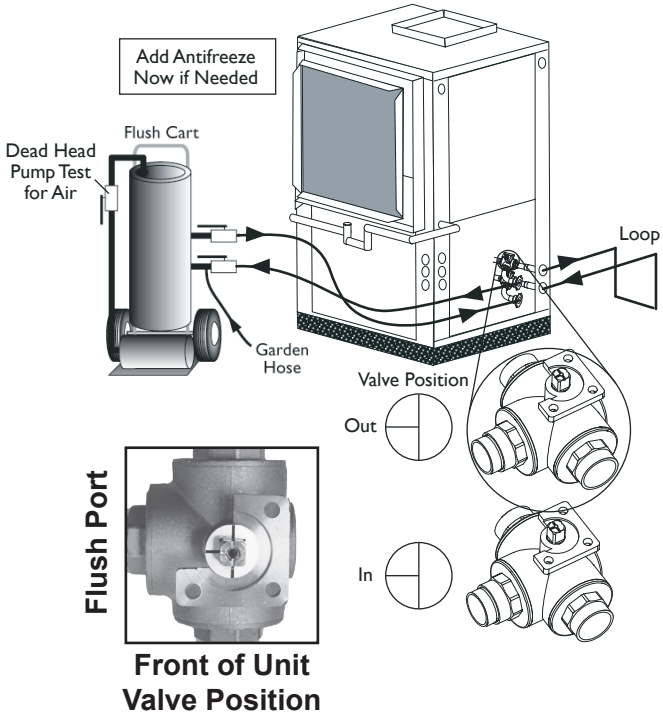

Flushing the Earth Loop (Cont.)

PRESSURIZE AND OPERATE

As shown in Figure 15d, close the flush cart return valve to pressurize the loop to at least 50 psi [345 kPa], not to exceed 75 psi [517 kPa]. Open the isolation valve to the expansion tank and bleed air from the expansion tank piping using the schraeder valve located in front of the expansion tank. This will allow loop pressure to compress the expansion tank bladder, thus charging the expansion tank with liquid. After pressurizing, close the flush cart supply valve to isolate the flush cart. Move the Flow Controller valves to Position D.

Loop static pressure will fluctuate with the seasons and pressures will be higher in the winter months than during the cooling season. This fluctuation is normal and should be considered when charging the system initially. Unhook the flush cart from the Internal Flow Controller. Install Flow Controller caps to ensure that any condensation/leakage remains contained within the Flow Controller package.

If the loop pressure is between 50 and 75 psi [345 to 517 kPa] upon completion of flushing, pressures should be sufficient for all seasons.

NOTICE: It is recommended to run the unit in the heating, then cooling mode for 15-20 minutes each to 'temper' the fluid temperature and prepare it for pressurization. This procedure helps prevent the periodic "flat" loop condition of no pressure.

Figure 15d: Valve Position D - Pressurize and Operation

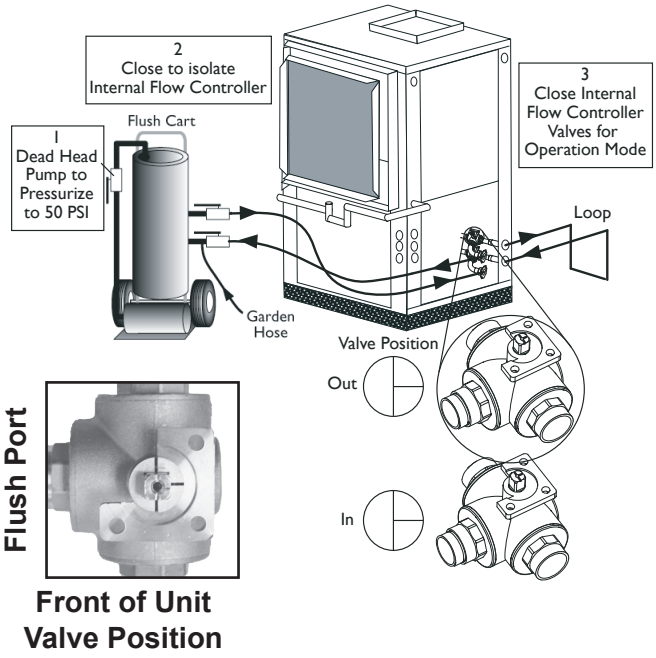

Multiple Unit Piping and Flushing

Often projects require more than one heat pump. Where possible, it makes sense for multiple units to share a common ground loop. Common ground loops for multiple units bring new challenges including the need to avoid backward flow through inactive units, increased pumping requirements, and more complex flushing needs. Below are guidelines for multiple unit piping and flushing on a common loop.

Units equipped with an internal flow controller (vFlow®) include an internal variable speed circulator controlled by the EXM microprocessor, internal 3-way flushing valves and an internal bladder type expansion tank. The internal pump includes an internal check valve. The pump curves for the internal circulator are shown in Figures 13a and 13b. The internal expansion tank will operate as a pressure battery for the geothermal system. It will absorb fluid from the loop when loop pressure rises and inject fluid into the loop when loop pressure falls. In this way the expansion tank will help to maintain a more constant loop pressure and avoid flat loops due to seasonal pressure changes in the loop.

When using the internal variable speed pump as the loop pump in multiple unit installations it is important to ensure that the variable speed pump can provide adequate flow through the heat pump against the loop head when all units are operating.

It may be possible to flush a multiple unit system through the unit's flushing valves. Flushing pressure drop of the valve may be calculated to determine if it is acceptable. Engineering data for the 3-way flushing valves can be found in Table 2.

Table 2: Internal 3-Way Flushing Valve Data

Model	Inlet Flushing Valve	Outlet Flushing Valve
VE*0930	3/4" FPT	3/4" MPT
VE*1860	3/4" FPT	1" MPT

Valve Size	Straight Flow (Normal Operation) Cv	90° Flow (Flushing) Cv
¾"	25	10.3
1"	58	14.5

⚠ CAUTION! ⚠

CAUTION! Never exceed a pressure of 100 psig or a flow rate of 30 gpm in a Trilogy unit. Pressure greater than 100 psig or flow rates greater than 30 gpm will damage the unit sensors causing the unit to miscommunicate certain data points and may cause the unit to nuisance fault.

For example, if a system includes two VE0930 units and four ¾ loop circuits we can calculate the flushing pressure drop as follows. From Table 1 we know that it will take 4 gpm to flush each ¾" circuit. If there is no provision to isolate the circuits for flushing, we will have to flush with a minimum of 4 circuits x 4 gpm/circuit = 16 gpm total. A check of other piping sizes used must be done to ensure that 16 gpm total flow will flush all piping.

Pressure drop through the flushing valve can be calculated using the following formula.

$\Delta P = (GPM/Cv)^2$ where,

ΔP = pressure drop in psi through the valve while flushing
GPM = flushing flow in gallons per minute
Cv = valve Cv in flushing mode

We know from Table 2 that the Cv for the flushing valve in a VE0930 is 10.3 in the flushing mode (90° flow). Therefore, $\Delta P = (GPM/Cv)^2 = (16/10.3)^2 = 2.4$ psi per valve (there are two flushing valves). So long as the flushing pump is able to provide 16 gpm at the flushing pressure drop of the loop plus the 2.4 x 2 valves = 4.8 psi (11 ft of hd) of the flushing valves, the internal flushing valves may be used. If the flushing pump is not able to overcome the pressure drop of the internal flushing valves, then larger external flushing valves must be used.

UNIT CONFIGURATION

Multiple vFlow® units with internal variable-speed flow controller and check valve, piped in parallel sharing a common loop MUST be properly configured. The unit configuration settings can be configured either through the myUplink Pro app or Service Tool. In the Loop Configuration menu ensure the unit is set for "Parallel". This will configure the unit to utilize special control logic for parallel units on a common ground loop.

Multiple Unit Piping and Flushing (Cont.)

MULTIPLE UNITS WITH INTERNAL FLOW CONTROLLERS

The simplest multiple unit system is one with two (or more) units utilizing Internal Flow Controllers with no external pumps or flushing valves. In this case the units are piped in parallel and use the internal flushing valves to flush the system. The variable speed pump includes an internal check valve to prevent back (short circuiting) flow through the units.

In this case, flush the loop through the internal flushing valves in the unit farthest from the loop first. Once the loop is flushed, change the internal flushing valves to flush the heat pump and loop together. Next, move the flushing cart to the next closest unit to the loop.

Again, flush the loop through the internal flushing valves. This is important as there may be air/debris in the lines from this unit to the common piping. Once flushing begins the air will be move into the loop and will need to be flushed out. After the loop is flushed through the second unit, change the flushing valves to flush the second unit and the loop. This process should be repeated for additional units working from the farthest from the loop to the closest to the loop.

This type of application can generally be employed for systems to 12 tons depending on loop design. However, it is important perform appropriate calculations to confirm that the variable speed pump can provide adequate flow through all heat pumps against the loop head when all units are operating.

MULTIPLE UNITS WITH INTERNAL FLOW CONTROLLERS AND EXTERNAL FLUSHING VALVES

When the number of units or flushing requirements reaches a point where it is no longer feasible to flush through the internal valves (generally systems of more than 12 tons depending on loop design), external flushing valves should be installed. In this case, three-way flushing valves should be used or additional isolation valves must be installed to be able to isolate the loop during flushing.

First, flush the ground loop. The installer should close the indoor loop shut-off valve (or the internal flushing valves in all units) and open the ground loop shut-off valve to prevent flow through the indoor loop while flushing the ground loop.

Once the ground loop is flushed, close the ground loop shut-off valve and open the indoor loop valve(s) to flush the units and indoor piping. Remember that there is an internal check valve in the variable speed pump and that backward flow the unit is not possible.

Figure 16a: Multiple Units with Internal Flow Controllers

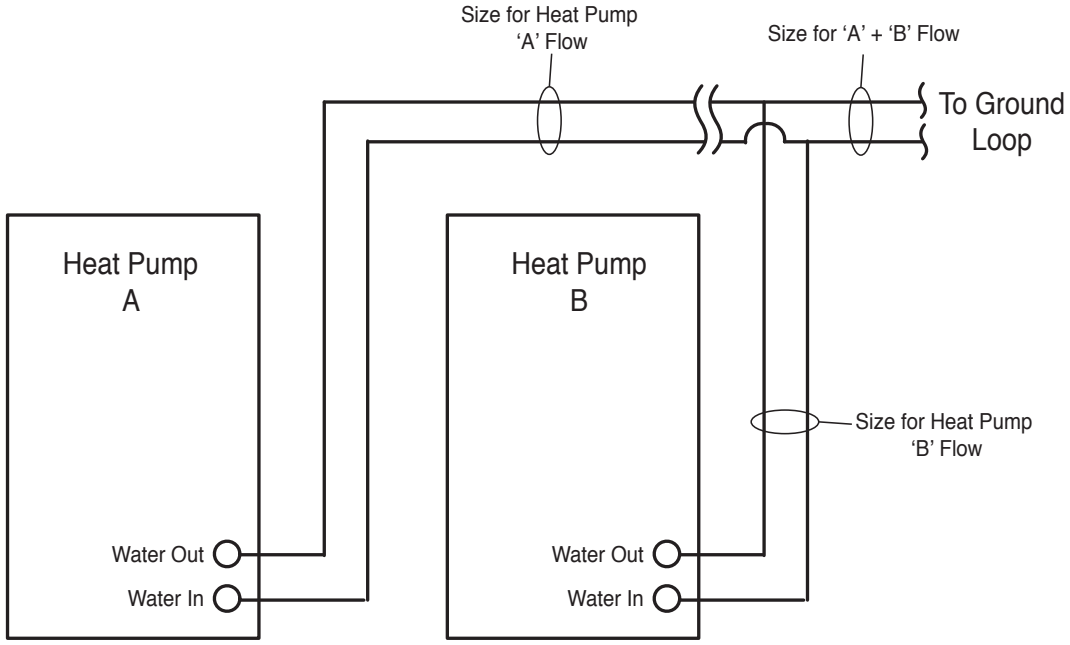

Multiple Unit Piping and Flushing (Cont.)

Figure 16b: Multiple Units with Internal Flow Controllers and External Flushing Valves

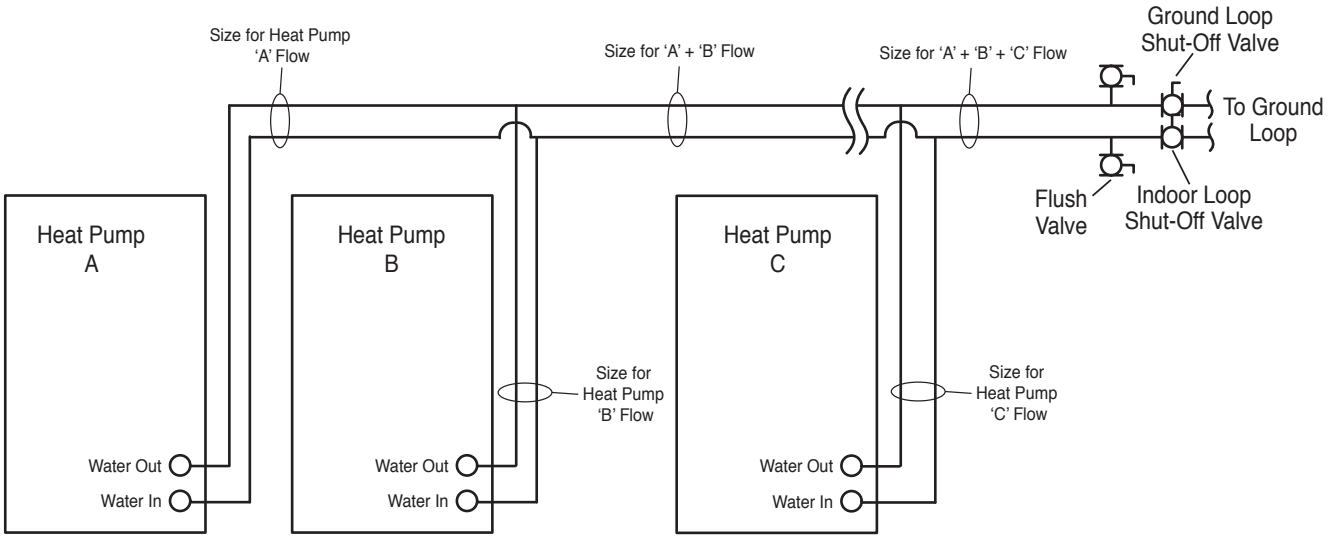

Ground Loop Heat Pump Applications

ANTIFREEZE SELECTION - GENERAL
In areas where minimum entering loop temperatures drop below 40°F [4.4°C] or where piping will be routed through areas subject to freezing, antifreeze is needed. Alcohols and glycols are commonly used as antifreeze solutions. Your local representative should be consulted for the antifreeze best suited to your area. Freeze protection should be maintained to 15°F [8.5°C] below the lowest expected entering loop temperature.

Initially calculate the total volume of fluid in the piping system using Table 3. Then use the percentage by volume shown in Table 4 for the amount of antifreeze. Antifreeze concentration should be checked from a well mixed sample using a hydrometer to measure specific gravity.

Table 3: Fluid Volume

Fluid Volume (gal [liters] per 100' [30 meters] Pipe)		
Pipe	**Size**	**Volume (gal) [liters]**
Copper	1"	4.1 [15.3]
	1.25"	6.4 [23.8]
	2.5"	9.2 [34.3]
Polyethylene	3/4" IPS SDR11	2.8 [10.4]
	1" iPS SDR11	4.5 [16.7]
	1.25" IPS SDR11	8.0 [29.8]
	1.5" IPS SDR11	10.9 [40.7]
	2" IPS SDR11	18.0 [67.0]
Unit Heat Exchanger	Typical	1.0 [3.8]
Flush Cart Tank	10" Dia x 3ft tall [25.4cm x 91.4cm tall]	10 [37.9]

⚠ WARNING! ⚠

WARNING! Always dilute alcohols with water (at least 50% solution) before using. Alcohol fumes are flammable and can cause serious injury or death if not handled properly.

When handling methanol (or any alcohol), always wear eye protection and rubber gloves as alcohols are easily absorbed through the skin.

Table 4: Antifreeze Percentages by Volume

Type	Minimum Temperature for Low Temperature Protection			
	10°F [-12.2°C]	15°F [-9.4°C]	20°F [-6.7°C]	25°F [-3.9°C]
Methanol	21%	17%	13%	8%
Propylene Glycol	29%	24%	18%	12%
Ethanol*	23%	20%	16%	11%

* Must not be denatured with any petroleum based product

Contact your ClimateMaster distributor if you have any questions as to antifreeze selection.

⚠ WARNING! ⚠

WARNING! Always use properly marked vehicles (D.O.T. placards), and clean/suitable/properly identified containers for handling flammable antifreeze mixtures. Post and advise those on the jobsite of chemical use and potential dangers of handling and storage.

NOTICE: DO NOT use automotive windshield washer fluid as antifreeze. Washer fluid contains chemicals that will cause foaming.

⚠ CAUTION! ⚠

CAUTION! Always obtain MSDS safety sheets for all chemicals used in ground loop applications including chemicals used as antifreeze.

ANTIFREEZE CHARGING
It is highly recommended to utilize premixed antifreeze fluid where possible to alleviate many installation problems and extra labor.

The following procedure is based upon pure antifreeze and can be implemented during the Full Flush procedure with three way valves in the Figure 15c - Valve Position C. If a premixed mixture of 15°F [-9.4°C] freeze protection is used, the system can be filled and flushed with the premix directly to prevent handling pure antifreeze during the installation.

1. Flush loop until all air has been purged from system and pressurize to check for leaks before adding any antifreeze.
2. Run discharge line to a drain and hook up antifreeze drum to suction side of pump (if not adding below water level through approved container). Drain flush cart reservoir down to pump suction inlet so reservoir can accept the volume of antifreeze to be added.
3. Calculate the amount of antifreeze required by first calculating the total fluid volume of the loop from Table 3. Then calculate the amount of antifreeze needed using Table 4 for the appropriate freeze protection level. Many southern applications require freeze protection because of exposed piping to ambient conditions.
4. Isolate unit and prepare to flush only through loop (see Figure 15a). Start flush cart, and gradually introduce the required amount of liquid to the flush cart tank (always introduce alcohols under water or use suction of pump to draw in directly to prevent fuming) until attaining the proper antifreeze protection. The rise in flush reservoir level indicates amount of antifreeze added (some carts are marked with measurements in gallons or liters). A ten inch [25.4 cm] diameter cylinder, 3 foot [91.4 cm] tall holds approximately 8 gallons [30.3 liters] of fluid plus the hoses (approx. 2 gallons, [7.6 liters], which

Ground Loop Heat Pump Applications (Cont.)

equals about 10 gallons [37.9 liters] total. If more than one tankful is required, the tank should be drained immediately by opening the waste valve of the flush cart noting the color of the discharge fluid. Adding food coloring to the antifreeze can help indicate where the antifreeze is in the circuit and prevents the dumping of antifreeze out the waste port. Repeat if necessary.

5. Be careful when handling methanol (or any alcohol). Always wear eye protection and rubber gloves. The fumes are flammable, and care should be taken with all flammable liquids. Open flush valves to flush through both the unit and the loop and flush until fluid is homogenous and mixed. It is recommended to run the unit in the heating and cooling mode for 15-20 minutes each to 'temper' the fluid temperature and prepare it for pressurization. Devoting this time to clean up can be useful. This procedure helps prevent the periodic "flat" loop condition.
6. Close the flush cart return valve; and immediately thereafter, close the flush cart supply valve, leaving a positive pressure in the loop of approximately 50 psi [345 kPa]. This is a good time to pressure check the system as well. Check the freeze protection of the fluid with the proper hydrometer to ensure that the correct amount of antifreeze has been added to the system. The hydrometer can be dropped into the flush reservoir and the reading compared to Chart 1a for Methanol, 1b for Propylene Glycol, and 1c for Ethanol to indicate the level of freeze protection. Do not antifreeze more than a +10°F [-12.2°C] freeze point. Specific gravity hydrometers are available in the residential price list. Repeat after reopening and flushing for a minute to ensure good second sample of fluid. Inadequate antifreeze protection can cause nuisance low temperature lockouts during cold weather.

⚠ WARNING! ⚠

WARNING! Always dilute alcohols with water (at least 50% solution) before using. Alcohol fumes are flammable and can cause serious injury or death if not handled properly.

When handling methanol (or any alcohol), always wear eye protection and rubber gloves as alcohols are easily absorbed through the skin.

7. Close the flush cart return valve; immediately thereafter, close the flush cart supply valve, shut off the flush cart leaving a positive pressure in the loop of approximately 50-75 psi [345-517 kPa]. Refer to Figure 15d for more details.

LOW WATER TEMPERATURE CUTOUT SETTING -
When anti-freeze is used in the ground loop heat exchanger, the unit configurations settings should be changed either through the myUplink Pro App or Service Tool. In the Options Configuration menu select "Yes" for systems with anti-freeze (10°F evaporator temperature), or "No" for system with anti-freeze (30°F evaporator temperature).

Chart 1a: Methanol Specific Gravity

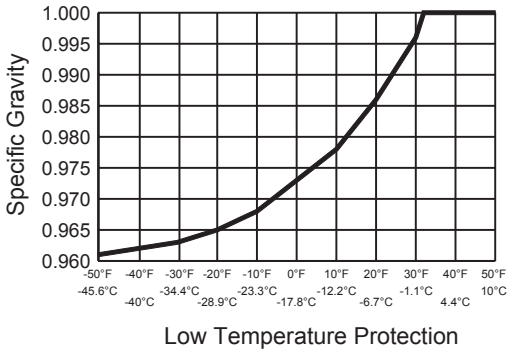

Chart 1b: Propylene Glycol Specific Gravity

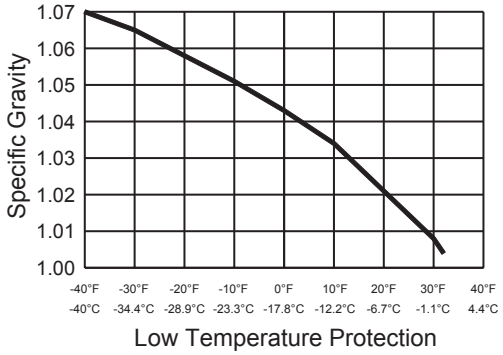

Chart 1c: Ethanol Specific Gravity

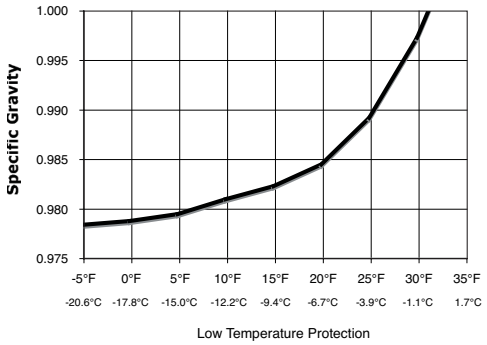

Water Quality Requirements

WATER QUALITY REQUIREMENTS

Clean water is essential to the performance and life span of water source heat pumps. Contaminants, chemicals, and minerals all have the potential to cause damage to the water heat exchanger if not treated properly. All closed water loop systems should undergo water quality testing and be maintained to the water quality standards listed in this table.

WATER QUALITY REQUIREMENTS

For Closed-Loop and Open-Loop Systems

				Heat Exchanger Type			
				Closed Loop Recirculating	Open Loop, Tower, Ground Source Well		
	Description	Symbol	Units	All Heat Exchanger Types	COAXIAL HX Copper Tube in Tube	COAXIAL HX Cupronickel	Brazed Plate HX 316 SS
Scaling Potential	pH - Chilled Water <85°F			7.0 to 9.0	7.0 to 9.0	7.0 to 9.0	7.0 to 9.0
	pH - Heated Water >85°F			8.0 to 10.0	8.0 to 10.0	8.0 to 10.0	8.0 to 10.0
	Alkalinity	($HCO3^-$)	ppm - $CaCO_3$ equiv.	50 to 500	50 to 500	50 to 500	50 to 500
	Calcium	(Ca)	ppm	<100	<100	<100	<100
	Magnesium	(Mg)	ppm	<100	<100	<100	<100
	Total Hardness	(CaCO3)	ppm - CaCO3 equiv.	30 to 150	150 to 450	150 to 450	150 to 450
	Langelier Saturation Index	LSI		-0.5 to +0.5	-0.5 to +0.5	-0.5 to +0.5	-0.5 to +0.5
	Ryznar Stability Index	RSI		6.5 to 8.0	6.5 to 8.0	6.5 to 8.0	6.5 to 8.0
Corrosion Prevention	Total Dissolved Solids	(TDS)	ppm - $CaCO_3$ equiv.	<1000	<1000	<1000	<1500
	Sulfate	(SO_4^{2-})	ppm	<200	<200	<200	<200
	Nitrate	(NO_3^-)	ppm	<100	<100	<100	<100
	Chlorine (free)	(Cl)	ppm	<0.5	<0.5	<0.5	<0.5
	Chloride (water < 80°F)	(Cl^-)	ppm	<20	<20	<150	<150
	Chloride (water > 120°F)		ppm	<20	<20	<125	<125
	Hydrogen Sulfide[α]	(H_2S)	ppb	<0.5	<0.5	<0.5	<0.5
	Carbon Dioxide	(CO_2)	ppm	0	<50	10 to 50	10 to 50
	Iron Oxide	(Fe)	ppm	<1.0	<1.0	<1.0	<0.2
	Manganese	(Mn)	ppm	< 0.4	<0.4	<0.4	<0.4
	Ammonia	(NH_3)	ppm	<0.05	<0.1	<0.1	<0.1
	Chloramine	(NH_2CL)	ppm	0	0	0	0
Fouling & Biological	Iron Bacteria		cells/mL	0	0	0	0
	Slime Forming Bacteria		cells/mL	0	0	0	0
	Sulfate reducing bacteria		cells/mL	0	0	0	0
	Suspended Solids[β]	(TSS)	ppm	<10	<10	<10	<10
Electrolysis All HX types	Earth Ground Resistance[χ]		Ohms	0	Consult NEC & local electrical codes for grounding requirements		
	Electrolysis Voltage[δ]		mV	<300	Measure voltage internal water loop to HP ground		
	Leakage Current[δ]		mA	<15	Measure current in water loop pipe		
	Building Primary Electrical Ground to unit, must meet local diameter and penetration length requirements						
	Do not connect heat pump to steel pipe unless dissimilar materials are separated by using Di-electric unions. Galvanic corrosion of heat pump water pipe will occur.						

Water Quality Requirements (Cont.)

1. The ClimateMaster Water Quality Table provides water quality requirements for coaxial & brazed plate heat exchangers.
2. The water must be evaluated by an independent testing facility comparing site samples against this Table. When water properties are outside of these parameters, the water must either be treated by a professional water treatment specialist to bring the water quality within the boundaries of this specification, or an external secondary heat exchanger must be used to isolate the heat pump water system from the unsuitable water. Failure to do so will void the warranty of the heat pump system and will limit liability for damage caused by leaks or system failure.
3. Regular sampling, testing and treatment of the water is necessary to assure that the water quality remains within acceptable levels thereby allowing the heat pump to operate at optimum levels.
4. If closed-loop systems are turned off for extended periods, water samples must be tested prior to operating the system.
5. For optimal performance, it is recommended that the closed-loop piping systems are initially filled with de-ionized water.
6. Well water with chemistry outside of these boundaries, and salt water or brackish water requires an external secondary heat exchanger. Surface/Pond water should not be used.
7. If water temperature is expected to fall below 40°F, antifreeze is required. Refer to the heat pump IOM for the correct solution ratios to prevent freezing.

Strainer / Filter Sizing			
Mesh Size	Particle Size		
	Microns	MM	Inch
20	840	0.840	0.0340
30	533	0.533	0.0210
60	250	0.250	0.0100
100	149	0.149	0.0060
150	100	0.100	0.0040
200	74	0.074	0.0029

ppm = parts per million
ppb = parts per billion

α Hydrogen Sulfide has an odor of rotten eggs. If one detects this smell, a test for H2S must be performed. If H2S is detected above the limit indicated, remediation is necessary (Consult with your Water Testing/Treatment Professional) or a secondary heat exchanger is required using appropriate materials as recommended by the heat exchanger supplier.

β Suspended solids and particulates must be filtered to prevent fouling and failure of heat exchangers. Strainers or particulate filters must be installed to provide a maximum particle size of 600 micron (0.60 mm, 0.023 in.) using a 20 to 30 mesh screen size. When a loop is installed in areas with fine material such as sand or clay, further filtration is required to a maximum of 100 micron. Refer to the Strainer / Filter Sizing Chart to capture the particle sizes encountered on the site.

χ An electrical grounding system using a dedicated ground rod meeting NEC and Local Electrical codes must be installed. Building Ground must not be connected the WSHP piping system or other plumbing pipes.

δ Refer to IOM for instructions on measuring resistance and leakage currents within water loops.

Do not use PVC pipe for water loop (compressor POE oil and glycols damage PVC) use of HDPE pipe is recommended.

Water Quality Requirements (Cont.)

Measuring Earth Ground Resistance

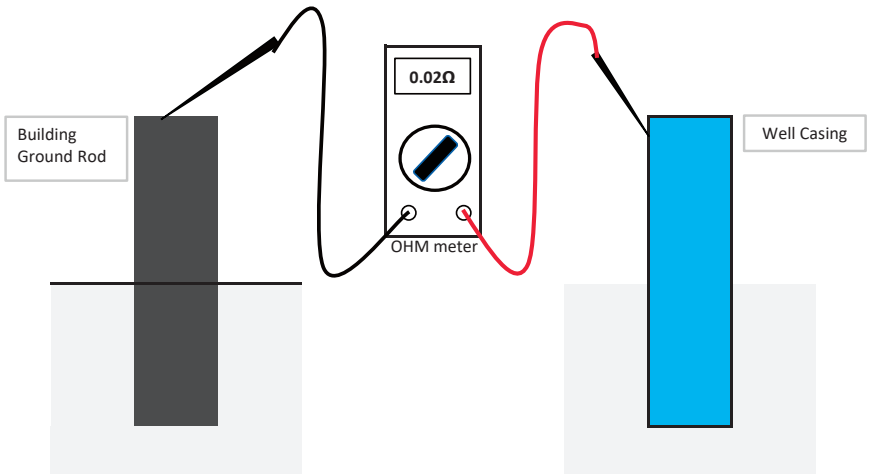

Measure the earth ground bond using an Ohm meter between the building's ground rod and the steel well casing.

The resistance measured should be zero Ohms. The NEC allows a resistance to ground up to 20 Ohms. Any resistance above zero, indicates a poor earth ground which may be the result of a hot neutral line or that conductive water is present. Both of these may lead to electrolysis and corrosion of the heat pump piping. A check for both should be performed and resolved.

Note if the well casing is plastic, a conductive path can be achieved by inserting a #6 AWG bare copper wire into the well water. Remove the temporary conductor when finished.

Measuring Electrolysis Voltage and Current

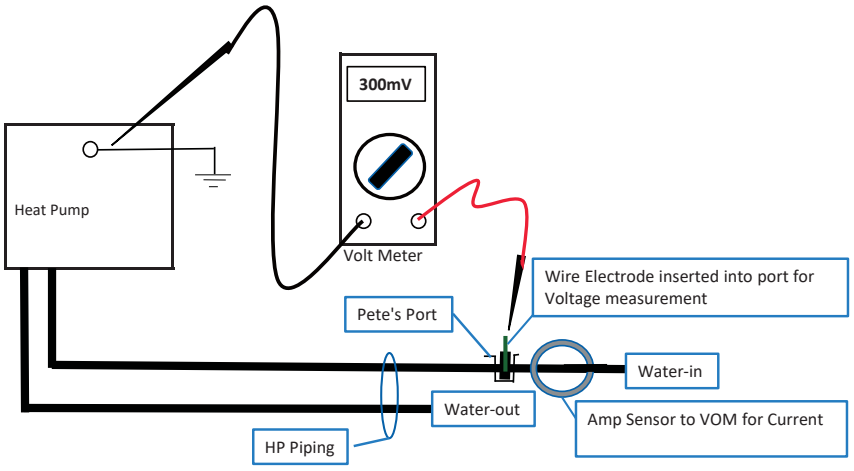

Measure the electrolysis voltage using a volt meter between the heat pump ground and a #14 AWG solid copper wire electrode inserted into the water using a Pete's style access port.

The HP must be operating and the water stream flowing.

The voltage measured should be less than 300mV (0.300 V). If higher than 500mV electrolysis will occure and corrosion will result.

If voltage is measured, the cause is a high resistance earth ground or current on the neutral conductor. Remedial measures should be performed.

Measure the current flowing through the piping system by using an amp clamp probe on the water-in line. The HP must be operating and the water stream flowing.

There should be zero amps measured. If current is present, there is leakage current to the plumbing system and it must be rectified to prevent pipe corrosion.

Electrical - Line Voltage

⚠ WARNING! ⚠

WARNING! To avoid possible injury or death due to electrical shock, open the power supply disconnect switch and secure it in an open position during installation.

⚠ CAUTION! ⚠

CAUTION! Use only copper conductors for field installed electrical wiring. Unit terminals are not designed to accept other types of conductors.

Table 7: Tranquility® (VE) Series ECM with Internal Flow Controller Electrical Data

VE Model	Rated Voltage	Compressor		Ext Loop FLA	Fan Motor FLA	Total Unit FLA	Min Circ Amp	Max Fuse/ HACR
		RLA	LRA					
0930	208/230/60/1	20.0	20.0	1.44	3.9	25.3	30.3	50
1860	208/230/60/1	32.0	32.0	1.44	6.9	40.3	48.3	80

Rated Voltage of 208/230/60/1
HACR circuit breaker in USA only

Min/Max Voltage of 197/254
All fuses Class RK-5

⚠ WARNING! ⚠

WARNING! Disconnect electrical power source to prevent injury or death from electrical shock. The capacitors on the inverter board store electrical energy. They will remain charged long after power has been disconnected. Extreme care should be used when working around these capacitors.

ELECTRICAL - LINE VOLTAGE

All field installed wiring, including electrical ground, must comply with the National Electrical Code as well as all applicable local codes. Refer to the unit electrical data for fuse sizes. Consult wiring diagram for field connections that must be made by the installing (or electrical) contractor.

All final electrical connections must be made with a length of flexible conduit to minimize vibration and sound transmission to the building.

GENERAL LINE VOLTAGE WIRING

Be sure the available power is the same voltage and phase shown on the unit serial plate. Line and low voltage wiring must be done in accordance with local codes or the National Electric Code, whichever is applicable.

POWER CONNECTION

Line voltage connection is made by connecting the incoming line voltage wires to the terminal block as shown in Figure 19. Consult Table 7 for correct fuse size. Note: always refer to the unit dataplate for unit electrical data.

208 VOLT OPERATION

All residential 208-230 Volt units are factory wired for 230 Volt operation. The transformer may be switched to the 208V tap as illustrated on the wiring diagram by switching the orange wire from the contactor terminal to the 208v transformer tap.

Figure 19: Trilogy Single Phase Line Voltage

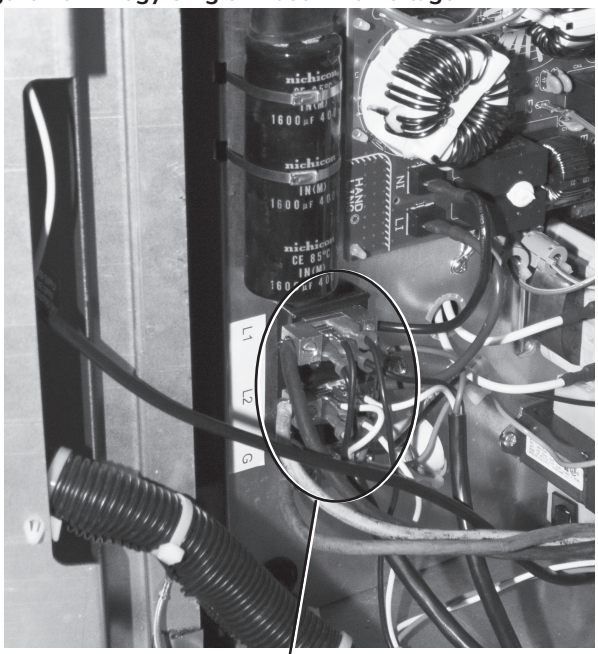

Unit Power Supply
(see electrical table 7 for minimum circuit amps and maximum breaker size)

Electrical - Low Voltage Wiring

ACCESSORY CONNECTIONS

The EXM controller includes accessory relays. Each relay includes a normally open (NO) and a normally closed (NC) contact. Accessory relays may be configured to operate as shown in Table 8.

Figure 20: EXM Layout and Connections

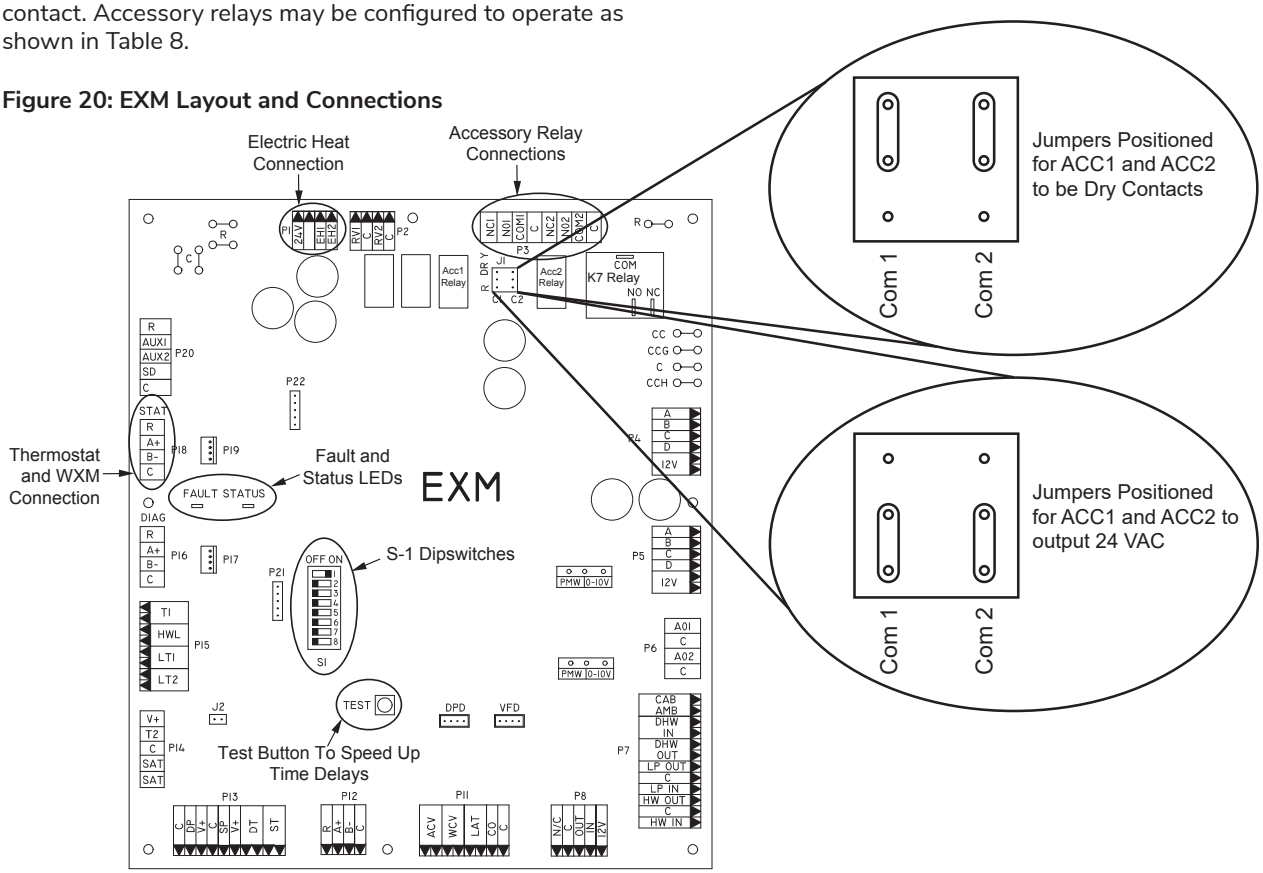

Table 8: Accessory Relay Configuration

S1 DIP Switch	Accessory Relay	On	Off
S1-1	N/A	Modbus Master	Modbus Slave
S1-2	N/A	Diagnostics Master	Diagnostics Slave
S1-3	ACC1 (K3)	Tracks Compressor	Tracks Blower
S1-4	ACC2 (K4)	Tracks Compressor	Tracks Blower
S1-5	K7	Tracks Compressor	Tracks Blower

Electrical - Low Voltage Wiring (Cont.)

Figure 21a: Control Board for Units with Mitsubishi Inverter and Mitsubishi Interface Module (MIM)

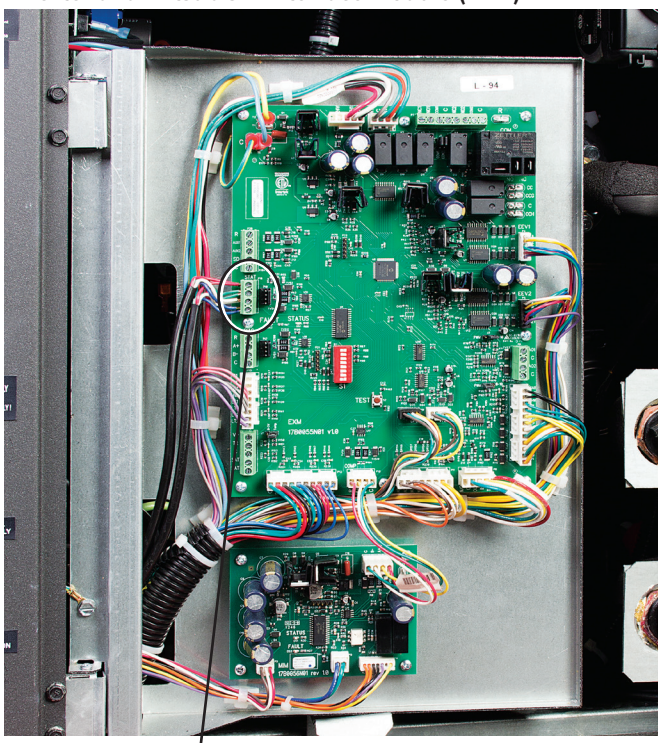

Figure 21b: Control Board for Units with Carel Inverter and Carel Interface Module (CIM)

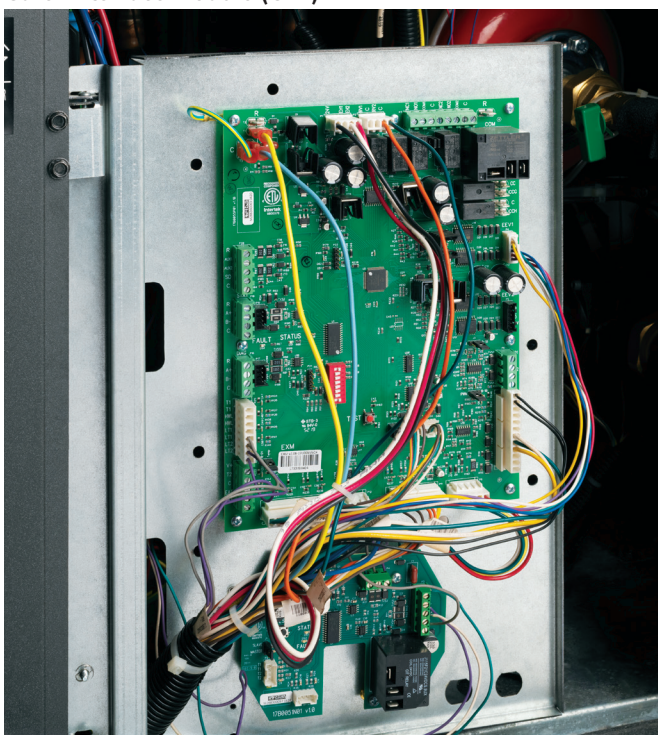

Electrical - Thermostat Wiring

THERMOSTAT INSTALLATION

The Trilogy unit is designed to be utilized with the iGate® 2 Communicating (AWC) Thermostat. Wire the thermostat as shown in Figure 22 to the low voltage terminal strip on the EXM control board. Refer to the iGate 2 Communicating (AWC) Thermostat IOM (Part #: 97B0132N01) for more detailed information.

Figure 22: iGate® 2 Communicating (AWC) Thermostat Connection to EXM

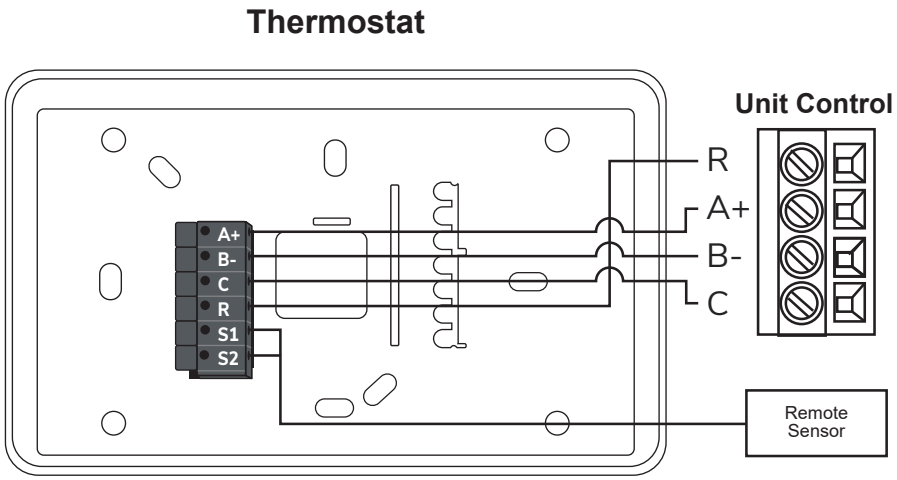

EXM Wiring Diagram - 96B0005N70

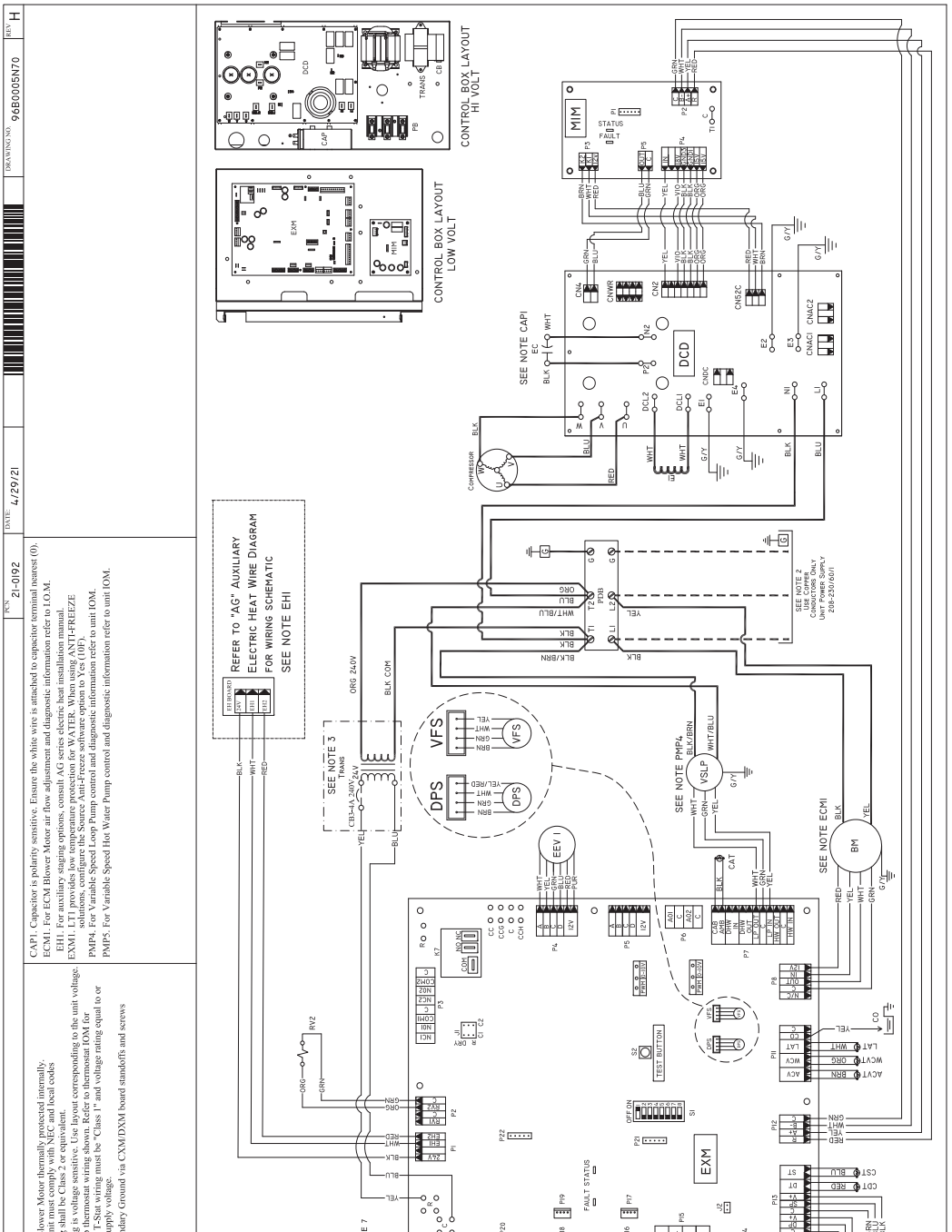

This diagram includes typical wiring details but is not applicable to all units. For specific unit wiring, refer to the diagram or the units' control panel.

EXM Wiring Diagram - 96B0262N04

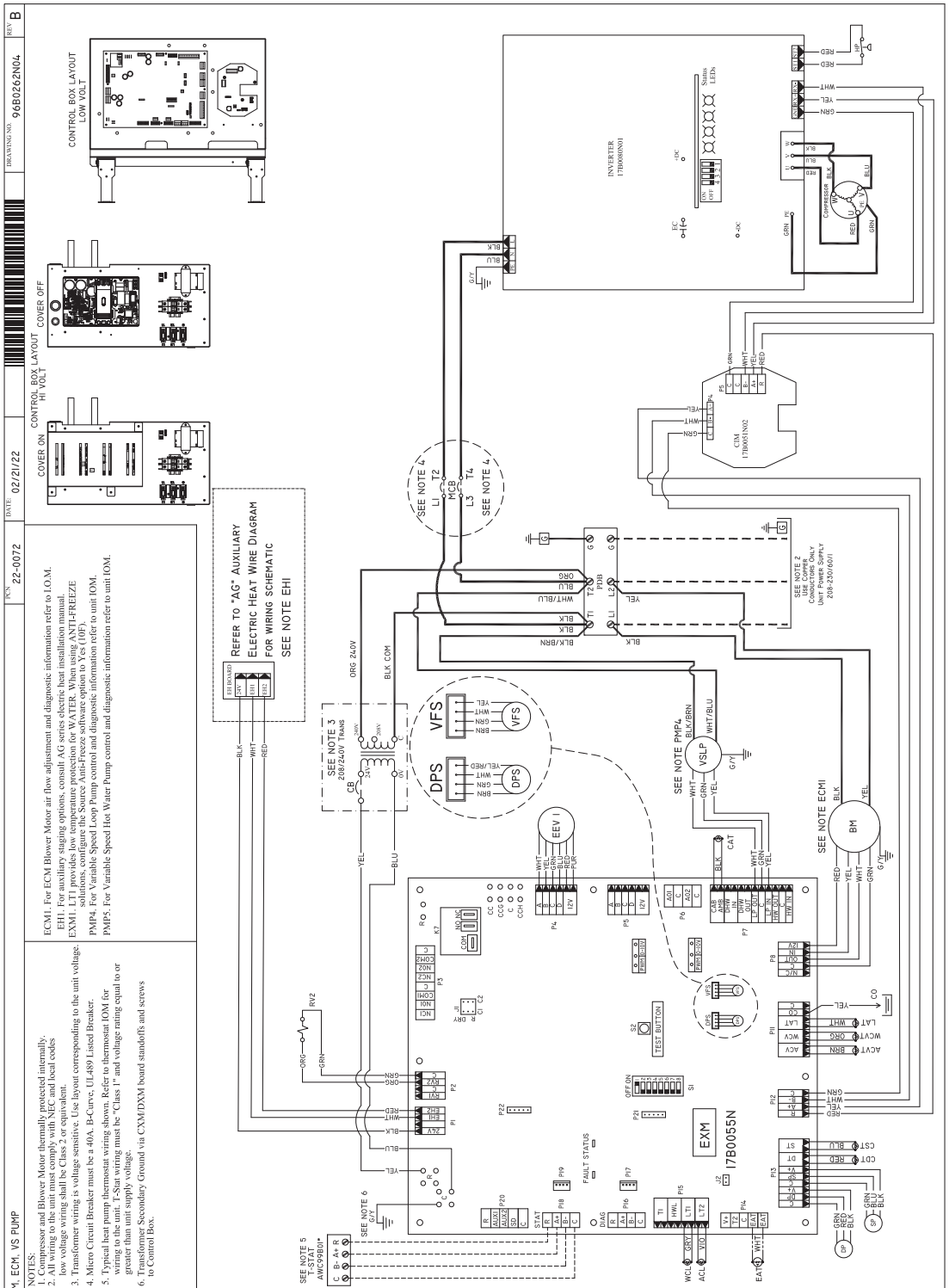

ECM Blower Control

ECM BLOWER CONFIGURATION

The ECM blower in the Trilogy unit is controlled by the EXM microprocessor. The blower cfm will vary as the compressor speed varies and as configured for operation by the installer. The range of airflow available will be determined by the unit model capacities selected for Minimum Heating Capacity, Maximum Heating Capacity, Minimum Cooling Capacity, and Maximum Cooling Capacity.

SPECIAL NOTE FOR AHRI TESTING

To achieve rated airflow for AHRI testing purposes, it is necessary to change the CFM settings to rated airflow.

AIRFLOW CONFIGURATION

Range for the airflow settings will depend on model and capacity selection (in 25 cfm increments).

Configuration Setting	Description
Min Heating Airflow	Configures the unit airflow while operating at minimum capacity in the heating mode. The installer may wish to select a higher cfm than the nominal cfm for this setting to ensure proper air movement during low-capacity operation.
Max Heating Airflow	Configures the unit airflow while operating at maximum capacity in the heating mode. The installer may wish to select a lower cfm than the nominal cfm for this setting to avoid air velocity noise from the ductwork during maximum capacity operation.
Min Cooling Airflow	Configures the unit airflow while operating at minimum capacity in the cooling mode. The installer may wish to select a higher cfm than the nominal 400 cfm/ton for this setting to ensure proper air movement during low-capacity operation.
Max Cooling Airflow	Configures the unit airflow while operating at maximum capacity in the cooling mode. The installer may wish to select a lower cfm than the nominal 400 cfm/ton for this setting to avoid air velocity noise from the ductwork during maximum capacity operation.
Low Dehumidification Airflow	Configures the unit airflow while operating at minimum capacity in the dehumidification mode.
High Dehumidification Airflow	Configures the unit airflow while operating at maximum capacity in the dehumidification mode.
Emergency Heat Airflow	Configures the unit airflow during the emergency heat mode (if applicable).
Constant Fan Airflow	Configures the unit airflow while operating in the continuous fan mode.
Heat Off Delay	This setting determines whether (and how long) the blower will continue to operate after the compressor has cycled off at the end of each heating cycle (0 seconds to 255 seconds, in 5 second increments).
Cool Off Delay	This setting determines whether (and how long) the blower will continue to operate after the compressor has cycled off at the end of each cooling cycle (0 seconds to 255 seconds, in 5 second increments).

ECM Blower Performance Data

Table 9: Trilogy® (VE) Series ECM Blower Performance Data Table

Trilogy Model	Max ESP (in wg)	Fan Motor (hp)	Range	Capacity	Cooling Mode	Dehum	Heating Mode	Fan Only Mode	Aux Emerg Mode
0930	0.45 at 1125; 0.75 at 1000	1/2	Default	9,000	300	275	300	350	850
				12,000	425	375	425		
				15,000	500	450	500		
				18,000	600	525	600		
				21,000	700	600	700		
				24,000	775	675	775		
				27,000	875	750	875		
				30,000	950	800	950		
			Minimum	9,000	225	225	200	225	700
				12,000	275	275	225		
				15,000	325	325	300		
				18,000	425	425	375		
				21,000	500	500	450		
				24,000	575	575	525		
				27,000	650	650	600		
				30,000	750	750	700		
			Maximum	9,000	375	375	375	1125	1125
				12,000	525	525	525		
				15,000	650	650	650		
				18,000	750	750	750		
				21,000	850	850	850		
				24,000	975	975	975		
				27,000	1075	1075	1075		
				30,000	1125	1125	1125		
1860	0.45 at 2250; 0.75 at 2000	1	Default	18,000	600	525	600	700	1500
				24,000	775	675	775		
				30,000	975	825	975		
				36,000	1150	1000	1150		
				42,000	1325	1150	1325		
				48,000	1525	1325	1525		
				54,000	1700	1475	1700		
				60,000	1875	1625	1875		
			Minimum	18,000	425	425	375	425	1350
				24,000	575	575	525		
				30,000	725	725	675		
				36,000	875	875	800		
				42,000	1025	1025	950		
				48,000	1200	1200	1075		
				54,000	1350	1350	1225		
				60,000	1500	1500	1375		
			Maximum	18,000	750	750	750	2250	2250
				24,000	975	975	975		
				30,000	1175	1175	1175		
				36,000	1400	1400	1400		
				42,000	1600	1600	1600		
				48,000	1825	1825	1825		
				54,000	2025	2025	2025		
				60,000	2250	2250	2250		

Airflow is controlled within 5% up to the Max ESP shown with wet coil

System Configuration

CONFIGURING THE iGATE® 2 COMMUNICATING (AWC) THERMOSTAT

The first step after installing the iGate® 2 Communicating (AWC) Thermostat is to configure the settings for the various devices that are being connected. This can be done through the myUplink App or Service Tool. The various configuration options are detailed below and in the iGate 2 Communicating (AWC) Thermostat IOM (Part #: 97B0132N01).

The Unit Configuration settings allow the installer to configure the thermostat to the installed equipment.Unit Configuration is only necessary when replacing a unit controller. The Unit Configuration settings are programmed at the factory when the unit is built.

Configuration Setting	Description
Heat Pump Family	Select the family of heat pump.
Heat Pump Size	Select the unit model.
Blower Type	Select the blower type.

CAPACITY CONFIGURATION

Range for the capacity settings will depend on model selection.

Configuration Setting	Description
Minimum Heating Capacity	Configures the minimum unit heating capacity. When the space requires a heating capacity below this setting the unit will cycle off.
Maximum Heating Capacity	Configures the maximum unit heating capacity. When the space requires a heating capacity above this setting the unit will call for auxiliary heat (if applicable).
Minimum Cooling Capacity	Configures the minimum unit cooling capacity. When the space requires a cooling capacity below this setting the unit will cycle off.
Maximum Cooling Capacity	Configures the maximum operational unit cooling capacity.

THRESHOLD CONFIGURATION

This section configures the temperature, time, and capacity thresholds associated with the heating, cooling, and hot water (if applicable) equipment. You must configure the Equipment settings before setting the thresholds. Only the applicable threshold settings will be displayed.

System Setting	Description	Range/Options	Default
Compressor Anticipator	Configures the sensitivity of the thermostat to the space temperature. A lower setting will cause the unit to respond more rapidly to changes in space temperature. A higher setting will cause the unit to respond more slowly to changes in space temperature.	1 to 10	5
Cooling Hot Water Cut Out	Determines the point at which the space cooling demand outpaces the ability of the potable water heating mode to accept the heat of rejection from the cooling mode when both are active at the same time. At this setting and above the heat of rejection from the cooling mode will be sent to the source (ground loop).	70% to 100%	100%
Heating Hot Water Cut Out	Potable water heating normally takes priority over space heating. This setting determines the point at which the space heating demand will take priority over the potable water heating demand.	70% to 100%	90%
Auxiliary Heat Dead-Band	Configures the amount of space temperature droop allowed from the heating setpoint at maximum unit capacity before allowing auxiliary heat for space heating.	0.0°F to 5.0°F	1.0°F
Cooling Hot Water Cut Out Offset	This setting establishes the maximum acceptable space temperature rise during the cooling mode while the heat from the space is being rejected into the potable hot water. If the space temperature rises more than this amount, the potable water heating mode will be terminated and the cooling mode will reject the heat from the space to the source (ground loop).	0.5°F to 1.5°F	0.5°F
Heating Hot Water Cut Out Offset	This setting establishes the maximum acceptable space temperature drop during the potable hot water mode before the unit switches to the space heating mode. If the space temperature drops more than this amount, the potable water heating mode will be terminated and the space heating mode will be activated.	0.5°F to 1.5°F	1.0°F

System Configuration (Cont.)

LOOP CONFIGURATION

Configures the internal vFlow® device to the application. The vFlow device will adjust the flow to maintain the selected temperature difference (Delta T) between the entering and leaving water for the active operating mode.

System Setting	Description	Range/Options	Default
Loop Configuration	Selects the type of internal flow device.	None, Variable Speed Pump, Modulating Valve	Variable Speed Pump
Loop Option	Configures the application for the loop.	Single system (one unit, one loop), Parallel system (multiple units, one common loop, parallel pumping)	Single system
Heating Delta T	Sets the source water flow rate for the heating mode. The variable speed pump or motorized valve will adjust the source water flow to maintain the selected temperature difference between the entering and leaving source water during the heating mode.	5.0°F to 12.0°F	6.0°F
Cooling Delta T	Sets the source water flow rate for the cooling mode. The variable speed pump or motorized valve will adjust the source water flow to maintain the selected temperature difference between the entering and leaving source water during the cooling mode.	9.0°F to 20.0°F	10.0°F

OPTION CONFIGURATION

System Setting	Description	Range/Options	Default
Compressor ASCD (Anti-Short Cycle Delay)	Configures the minimum amount of time the compressor will remain off between cycles.	5 to 8 minutes	5 minutes
Over/Under Voltage Detection	Configure the over/under voltage detection.	Enabled, Disabled	Enabled
Source Antifreeze (if applicable)	Configures the low temperature protection setting for the source water heat exchanger.	No - 30°F, Yes - 10°F	No - 30°F

Over/Under Voltage condition exists when the control voltage is outside the range of 18VAC to 31.5VAC.

System Configuration (Cont.)

UNIT MANUAL OPERATION

Manual Operation mode allows the service technician to manually command operation for operating mode, any of the thermostat outputs, blower speed, as well as pump speed or valve position to aid in troubleshooting. Available data will depend on the unit/model installed.

Manual Setting	Description	Options
Field Test Mode		Enabled, Disabled
Operating Mode	Selects the manual mode of operation.	Standby, Const Fan, Cooling, Heating, Aux Heat, EM Heat, Hot Water, Cooling/HW
ECM Target Airflow	Configures the target airflow during manual operation.	Range will depend on unit model
ECM Blower Speed	Displays current ECM motor rpm.	--
Loop Pump Speed	Sets loop pump speed.	0% to 100%. Default - 41%
DHW Pump Speed	Sets DHW pump speed.	0% to 100%. Default - 0%
Compressor Actual Speed	Current compressor speed in rps (revolutions per second).	--

The ECM Airflow adjustment will not be present if the connected communicating control is not configured for Blower type = ECM.

The Pump Speed adjustment will not be present if the connected communicating control is not configured for Loop Configuration = Pump.

CLEAR FAULT HISTORY

Clear Fault history will clear all fault codes stored in the thermostat as well as the fault history in any connected communicating controls.

OPERATING INFORMATION

The Diagnostics data set allows the service technician to view the real time status of all physical inputs, switches, temperature sensor readings, as well as the operational status of the heat pump from the myUplink mobile app and web portal. Available data will depend on the unit/model installed.

COMPRESSOR DIAGNOSTICS

Data	Unit	Description
Compressor Current	A	Current compressor amperage.
Compressor DC Voltage	V	Current DC bus voltage from the inverter.
Compressor Heat Sink	F	Current temperature of the inverter heat sink.
Compressor Input Power	W	Current power consumption of the compressor.
Compressor Inverter Current	A	Current amperage draw of the inverter.
Compressor Speed	rps	Current compressor speed.
Unit Capacity	%	Current operating capacity as a percentage of the max capacity.

BLOWER DIAGNOSTICS

Data	Unit	Description
ECM Blower Power	W	Instantaneous power consumption of the blower.
ECM Blower Speed	rpm	Current blower speed.
ECM Target Airflow	cfm	Current blower target airflow.
Entering Air Temperature	F	Current temperature of the air entering the unit.
Leaving Air Temperature	F	Current temperature of the air leaving the unit.

LOOP DIAGNOSTICS

Data	Unit	Description
A1 Analog Output	V	Current voltage output at the configurable analog output. (Applies to Tranquility.)
A2 Analog Output	V	Current voltage output at the configurable analog output. (Applies to Tranquility.)
Entering Water Temperature	F	Current temperature of the water entering the source heat exchanger.
Leaving Water Temperature	F	Current temperature of the water leaving the source heat exchanger.
Loop Pump Feedback	%	Current feedback signal of the loop pump.
Loop Pump Flow Rate	gpm	Current source flow rate.
Loop Pump Power	W	Instantaneous power consumption of the loop pump.
Loop Pump Speed	%	Current speed of the loop pump.
Water Pressure	psi	Current pressure of the water as it leaves the source heat exchanger.

System Configuration (Cont.)

REFRIGERANT DIAGNOSTICS

Data	Unit	Description
Air Coil Liquid Temperature	F	Current temperature of the refrigerant liquid line between the air coil and the electronic expansion valve.
Air Coil Vapor Temperature	F	Current temperature of the refrigerant vapor line between the heat/cool reversing valve and the air coil.
Compressor Discharge Pressure	psi	Current refrigerant discharge pressure.
Compressor Discharge Saturation Temperature	F	Current saturation temperature of the refrigerant discharge pressure.
Compressor Discharge Superheat Temperature	F	Current calculation of superheat temperature at the discharge of the compressor.
Compressor Discharge Temperature	F	Current temperature of the compressor discharge line.
Compressor Subcool Temperature	F	Current calculation of subcool temperature at the liquid line of the compressor.
Compressor Suction Pressure	psi	Current refrigerant suction pressure.
Compressor Suction Saturation Temperature	F	Current saturation temperature of the refrigerant suction pressure.
Compressor Suction Superheat Temperature	F	Current calculation of superheat at the suction to the compressor.
Compressor Suction Temperature	F	Current temperature of the compressor suction line.
HW Coil Liquid Temperature	F	Current temperature of the refrigerant liquid line leaving the potable water heat exchanger.
Water Coil Liquid Temperature	F	Current temperature of the refrigerant liquid line between the source heat exchanger and the electronic expansion valve.
Water Coil Vapor Temperature	F	Current temperature of the refrigerant vapor line between the heat/cool reversing valve and the source heat exchanger.

REFRIGERANT VALVE DIAGNOSTICS

Data	Description
RV1 Status (QE models only)	Status of the RV1 (potable water heating) reversing valve.
RV2 Status	Status of the RV2 (heat/cool) reversing valve.
Water Coil EEV1 Status	Status of the heating electronic expansion valve.
Water Coil EEV1 Position	Current position of the heating electronic expansion valve in steps. (0=fully closed, 1040 = fully open)
Air Coil EEV2 Status (QE models only)	Status of the cooling electronic expansion valve.
Air Coil EEV2 Position (QE models only)	Current position of the cooling electronic expansion valve in steps. (0=fully closed, 1040 = fully open)

MISCELLANEOUS DIAGNOSTICS

Data	Unit	Description
Control Voltage	V	Unit's control voltage.
Cabinet Ambient Temperature	F	Ambient temperature in the unit's compressor section.
Heat of Extraction/ Rejection	Btu/ hr	Current calculation of heat of extraction (heating) or heat of rejection (cooling) to/from the loop depending on mode of operation.

HOT WATER DIAGNOSTICS (IF AVAILABLE)

Data	Unit	Description
Control Voltage	V	Hot water tank's control voltage.
Element Relay Status	--	Status of the hot water element relays.
Hot Water Temperature/ Upper Tank Temperature	F	Current temperature at the upper element of the storage tank.
Lower Tank Temperature	F	Current temperature at the lower element of the storage tank.

HOT WATER PUMP DIAGNOSTICS (IF AVAILABLE)

Data	Unit	Description
Hot Water Pump Speed	%	Current speed of the DHW pump.
Hot Water Pump Power	W	Instantaneous power consumption of the DHW pump.
Hot Water Flow Rate	gpm	DHW flow rate.
Hot Water Entering Water Temperature	F	Temperature of the potable hot water entering the potable hot water heat exchanger.
Hot Water Leaving Water Temperature	F	Temperature of the potable hot water leaving the potable hot water heat exchanger, returning to the iGate Smart Tank.

DIP SWITCH SETTINGS

System Setting	Description	Range/Options	Default
Dip switch SW1-1	Modbus Communications.	Modbus Master, Modbus Slave	--
Dip switch SW1-2	Diagnostic Communications.	Diagnostic Master, Diagnostic Slave	--
Dip switch SW1-3	ACC K3 (ACC1) Relay Tracks.	Compressor, Blower	--
Dip switch SW1-4	ACC K4 (ACC2) Relay Tracks.	Compressor, Blower	--
Dip switch SW1-5	ACC K7 Tracks.	Compressor, Blower	--
Dip switch SW1-6	Hot Water Heat Exchanger.	Enable, Disable	--

The unit control dip switch settings cannot be changed from the web, mobile, or thermostat display.

FAULT HISTORY

Fault History stores and displays the five most recent fault or warning codes for the connected communicating control.

System Configuration (Cont.)

An alternative method to configure (and diagnose) the Trilogy unit is ClimateMaster's Trilogy PC Service Tool. This tool is a must for troubleshooting Trilogy units.

The service tool software installs on a PC / laptop. Connect the PC to the EXM board in the Trilogy using the cables from service tool kit ASVCTOOL01.

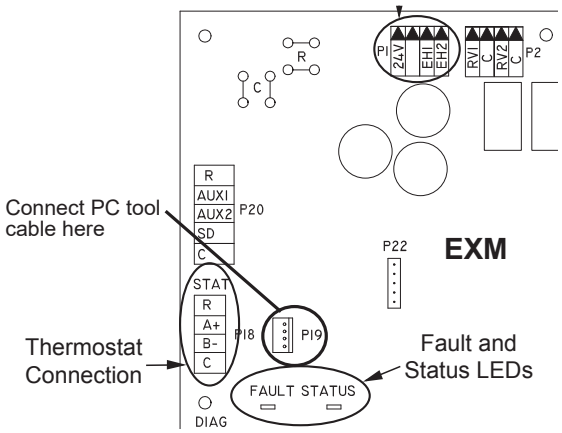

From the software you can:

1. Update the software on the EXM board using the bootloader.
2. Configure, diagnose and manual operation of the Trilogy from the service tool.

CONFIGURATION:

The service tool software includes three pages of configuration data for your Trilogy and the following are values that can be configured on these pages:

1. Equipment
   a. Unit family, blower type, loop config
   b. Loop delta T; single/parallel; Anti-freeze
   c. Capacity: Min/Max Cool/Heat
   d. Airflows
   e. Serial # updates
   f. Aux. heat operating mode
2. Thresholds (limits)
   a. Cooling-Dehumid cutout
   b. Anticipator
   c. Compressor ASCD minutes
3. Service mode/ clear fault history
   a. Enter service mode
   b. Manual operation:
   c. Operating mode
   d. Target airflow
   e. Loop pump speed
   f. Clear Fault History

DIAGNOSTICS / REAL-TIME OPERATING DATA:

The service tool software includes configuration data for your Trilogy and you can get all readings and calculated values in REAL TIME from the EXM board. The following are values that can be viewed on these pages:

1. Calculations
   a. Discharge Superheat
   b. Suction Superheat
   c. Subcooling
   d. HR/HE
   e. Loop Pump Watts
   f. Current % Capacity
2. Sensor values
   1. Space Temp
   2. Space Humidity
   3. Discharge Pressure
   4. Discharge Temp
   5. Suction Pressure
   6. Suction Temp
   7. Air Coil Liq Temp
   8. Air Coil Vap Temp
   9. Loop Water Coil Liq Temp
   10. Loop Water Coil Vap Temp
   11. Loop Entering Water Temp
   12. Loop Leaving Water Temp
   13. Loop GPM
   14. Loop Pressure
   15. Loop Pump Speed
   16. Loop Pump Return
   17. Fan CFM
   18. Fan RPM
   19. Fan Watts
   20. Leaving Air temperature
   21. Target Compressor Speed
   22. Compressor Current
   23. Inverter Current
   24. Inverter DC Bus Volt
   25. Inverter Sink Temp
   26. Compressor Watts
   27. Electronic Expansion Valve1 Step
   28. Reversing Valve2 Status
   29. Ambient Cabinet Temp
   30. EXM Control Voltage
3. Dip switch status

FAULT CODES

The service tool software includes data for every fault code and saves up to 5 fault codes. You can get all readings and calculated values in AT TIME OF FAULT from the EXM board.

Operating and Commissioning Limits

OPERATING LIMITS

Environment – Units are designed for indoor installation only. Never install units in areas subject to freezing or where humidity levels could cause cabinet condensation (such as unconditioned spaces subject to 100% outside air).

Power Supply – Voltage utilization shall comply with unit data plate.

Determination of operating limits is dependent primarily upon three factors: 1) return air temperature. 2) water temperature, and 3) ambient temperature. When any one of these factors is at minimum or maximum levels, the other two factors should be at normal levels to insure proper unit operation. Extreme variations in temperature and humidity and/or corrosive water or air will adversely affect unit performance, reliability, and service life. Consult Table 10a for operating limits.

COMMISSIONING LIMITS

Consult Table 10b for commissioning limits. Starting conditions vary depending upon model and are based upon the following notes:

NOTES:

1. Conditions in Table 10b are not normal or continuous operating conditions. Minimum/maximum limits are start-up conditions to bring the building space up to occupancy temperatures. Units are not designed to operate under these conditions on a regular basis.

Table 10a: Operating Limits

Operating Limits	Unit	
	Cooling	Heating
Air Limits		
Min. Ambient Air, DB	45°F [7°C]	39°F [4°C]
Rated Ambient Air, DB	80.6°F [27°C]	68°F [20°C]
Max. Ambient Air, DB	130°F [54°C]	85°F [29°C]
Min. Entering Air, DB/WB	65/45°F [18/7°C]	50°F [10°C]
Rated Entering Air, DB/WB	80.6/66.2°F [27/19°C]	68°F [20°C]
Max. Entering Air, DB/WB	100/75°F [38/24°C]	80°F [27°C]
Water Limits		
Min. Entering Water	20°F [-6.7°C]	20°F [-6.7°C]
Normal Entering Water	50-110°F [10-43°C]	30-70°F [-1 to 21°C]
Max. Entering Water	120°F [49°C]	120°F [49°C]
Normal Water Flow	1.5 to 3.0 gpm/ton [1.6 to 3.2 l/m per kW]	

Table 10b: Commissioning Limits

Commissioning Limits	Unit	
	Cooling	Heating
Air Limits		
Min. Ambient Air, DB	45°F [7°C]	39°F [4°C]
Rated Ambient Air, DB	80.6°F [27°C]	68°F [20°C]
Max. Ambient Air, DB	130°F [54°C]	85°F [29°C]
Min. Entering Air, DB/WB	60°F [16°C]	40°F [4.5°C]
Rated Entering Air, DB/WB	80.6/66.2°F [27/19°C]	68°F [20°C]
Max. Entering Air, DB/WB	110/83°F [43/28°C]	80°F [27°C]
Water Limits		
Min. Entering Water	20°F [-6.7°C]	20°F [-6.7°C]
Normal Entering Water	50-110°F [10-43°C]	30-70°F [-1 to 21°C]
Max. Entering Water	120°F [49°C]	120°F [49°C]
Normal Water Flow	1.5 to 3.0 gpm/ton [1.6 to 3.2 l/m per kW]	

Unit Start-Up and Operating Conditions

Unit and System Checkout

BEFORE POWERING SYSTEM, please check the following:

UNIT CHECKOUT

- ❑ **Shutoff valves:** Insure that all isolation valves are open.
- ❑ **Line voltage and wiring:** Verify that voltage is within an acceptable range for the unit and wiring and fuses/breakers are properly sized. Verify that low voltage wiring is complete.
- ❑ **Unit control transformer:** Insure that transformer has the properly selected voltage tap. Residential 208-230V units are factory wired for 230V operation unless specified otherwise.
- ❑ Loop/water piping is complete and purged of air. Water/piping is clean.
- ❑ Antifreeze has been added if necessary.
- ❑ **Entering water and air:** Insure that entering water and air temperatures are within operating limits of Tables 10a and 10b.
- ❑ **Low water temperature cutout:** Verify that low water temperature cut-out is properly set.
- ❑ **Unit fan:** Manually rotate fan to verify free rotation and insure that blower wheel is secured to the motor shaft. Be sure to remove any shipping supports if needed. DO NOT oil motors upon start-up. Fan motors are pre-oiled at the factory. Check unit fan CFM selection and compare to design requirements.
- ❑ **Condensate line:** Verify that condensate trap is installed and pitched.
- ❑ **Unit air coil and filters:** Insure that filter is clean and accessible. Clean air coil of all manufacturing oils.
- ❑ **Unit controls:** Verify that EXM field selection options are properly configured. Low voltage wiring is complete.
- ❑ Blower CFM and Water ΩT are properly configured.
- ❑ Service/access panels are in place.

SYSTEM CHECKOUT

- ❑ **System water temperature:** Check water temperature for proper range and also verify heating and cooling set points for proper operation.
- ❑ **System pH:** Check and adjust water pH if necessary to maintain a level between 6 and 8.5. Proper pH promotes system longevity (see Table 5).
- ❑ **System flushing:** Verify that all air is purged from the system. Air in the system can cause poor operation or system corrosion. Water used in the system must be potable quality initially and clean of dirt, piping slag, and strong chemical cleaning agents. Some antifreeze solutions may require distilled water.
- ❑ **Internal Flow Controller:** Verify that it is purged of air and in operating condition.
- ❑ **System controls:** Verify that system controls function and operate in the proper sequence.
- ❑ **Low water temperature cutout:** Verify that low water temperature setting is appropriate for the application.
- ❑ **Miscellaneous:** Note any questionable aspects of the installation.

⚠ CAUTION! ⚠

CAUTION! Verify that ALL water valves are open and allow water flow prior to engaging the compressor. Freezing of the heat exchanger or water lines can permanently damage the heat pump.

⚠ CAUTION! ⚠

CAUTION! To avoid equipment damage, DO NOT leave system filled in a building without heat during the winter unless antifreeze is added to the water loop. Heat exchangers never fully drain by themselves and will freeze unless winterized with antifreeze.

Unit Start-Up Procedure

UNIT START-UP PROCEDURE

1. Ensure all valves are adjusted to their full open position. Ensure line power to the heat pump is on.
2. Room temperature should be within the minimum-maximum ranges of listed in the unit IOM. During start-up checks, loop water temperature entering the heat pump should be between 30°F [-1°C] and 95°F [35°C].
3. It is recommended that Trilogy units be first started in the heating mode, when possible. This will allow liquid refrigerant to flow through the filter-drier before entering the EEV, allowing the filter-drier to catch any debris that might be in the system before it reaches the EEV.
4. Place the unit in Manual Operation mode with the myUplink Pro app or Service Tool.
5. While in the manual operation mode, turn on the blower by setting the ECM Target Airflow to a nominal amount.
   a. Verify the blower is running and that air is moving appropriately through the duct system.
   b. Verify that the loop pump is running.
   c. Set the unit operating mode to Heating
   NOTE: The compressor will not start if the blower and pump are not operating at appropriate levels.
   d. Check for vibration, noise, and water leaks
   e. Check for warm air delivery at the supply air grilles within a few minutes after the unit has begun to operate and that the loop water temperature drop is within normal range.
   f. Allow unit to run 15 minutes so that it reaches a semi-steady state.

NOTE: Allow three (3) minutes between tests for pressure to equalize before beginning cooling test.

6. Finally, set the unit to the Cooling Mode
   a. Verify that the compressor is on and that the water temperature rise (cooling mode) is within normal range.
   b. Check for cool air delivery at the supply air grilles within a few minutes after the unit has begun to operate.
   c. Check the elevation and cleanliness of the condensate lines. Dripping may be a sign of a blocked line. Check that the condensate trap is filled to provide a water seal.

⚠ WARNING! ⚠

WARNING! When the disconnect switch is closed, high voltage is present in some areas of the electrical panel. Exercise caution when working with energized equipment.

Table 11: Water Temperature Change Through Heat Exchanger

Water Flow, gpm (l/m)	Rise, Cooling °F	Drop, Heating °F
For Closed Loop: Ground Source or Closed Loop Systems at 3 gpm per ton (3.9 l/m per kw)	9 - 12	4 - 8
For Open Loop: Ground Water Systems at 1.5 gpm per ton (2.0 l/m per kw)	20 - 26	10 - 17

7. If unit fails to operate properly, perform troubleshooting analysis (see troubleshooting section in this manual). If the check described fails to reveal the problem and the unit still does not operate, contact a trained service technician to insure proper diagnosis and repair of the equipment.
8. When testing is complete, exit the Manual Operation Menu and set thermostat to maintain desired comfort level for normal operation.
9. BE CERTAIN TO FILL OUT AND RETURN ALL WARRANTY REGISTRATION PAPERWORK.

NOTE: To obtain maximum performance, the air coil should be cleaned before start-up. A 10% solution of dishwasher detergent and water is recommended.

Unit Operating Conditions

Table 12a: 0930 Pressure and Temperature

0930		Cooling					
Entering Water Temp °F	DT	Suction Pressure PSIG	Discharge Pressure PSIG	Super heat	Sub cooling	Water Flow GPM	Air Temp Drop °F DB
50	20	136-141	209-229	8-12	9-14	2.1-3.1	17-23
	15	135-140	187-207	12-16	9-14	3.4-4.4	17-23
	10	134-139	165-185	17-21	8-13	4.7-5.7	17-23
70	20	140-145	298-318	8-12	10-15	2.3-3.3	17-23
	15	139-144	276-296	8-12	9-14	3.7-4.7	17-23
	10	139-144	254-274	8-12	9-14	5.1-6.1	17-23
90	20	139-144	387-407	8-12	11-16	2.5-3.5	17-23
	15	139-144	365-385	8-12	11-16	4.0-5.0	17-23
	10	139-144	343-363	8-12	11-16	5.5-6.5	17-23
110	20	135-140	476-496	8-12	13-18	2.7-3.7	17-23
	15	136-141	454-474	8-12	12-17	4.3-5.3	17-23
	10	137-142	432-452	8-12	12-17	5.9-6.9	17-23

0930		Heating					
Entering Water Temp °F	DT	Suction Pressure PSIG	Discharge Pressure PSIG	Super heat	Sub cooling	Water Flow GPM	Air Temp Rise °F DB
30	11	61-71	362-382	8-12	32-37	2.5-3.5	25-31
	8	69-74	352-372	8-12	30-35	4.0-5.0	25-31
	5	77-82	345-365	8-12	27-32	5.5-6.5	25-31
50	12	106-111	331-351	8-12	18-23	2.5-3.5	25-31
	9	112-117	331-351	8-12	16-21	4.0-5.0	25-31
	6	119-124	330-350	8-12	14-19	5.5-6.5	25-31
70	13	148-153	329-349	8-12	7-12	2.5-3.5	25-31
	10	155-160	329-349	8-12	6-11	4.0-5.0	25-31
	7	161-166	328-348	8-12	5-10	5.5-6.5	25-31
90	14	190-195	324-344	8-12	2-7	2.5-3.5	25-31
	11	197-202	324-344	8-12	1-6	4.0-5.0	25-31
	8	203-208	324-344	8-12	1-6	5.5-6.5	25-31

Table 12b: 1860 Pressure and Temperature

1860		Cooling					
Entering Water Temp °F	DT	Suction Pressure PSIG	Discharge Pressure PSIG	Super heat	Sub cooling	Water Flow GPM	Air Temp Drop °F DB
50	20	127-137	208-228	8-12	7-12	10.8-11.8	17-23
	15	127-137	186-206	12-16	7-12	10.5-11.5	17-23
	10	127-137	163-183	17-21	6-11	10.3-11.3	17-23
70	20	125-135	298-318	8-12	8-13	11.7-12.7	17-23
	15	126-136	275-295	8-12	8-13	11.5-12.5	17-23
	10	126-136	253-273	8-12	7-12	11.2-12.2	17-23
90	20	120-130	387-407	8-12	10-15	12.6-13.6	17-23
	15	122-132	365-385	8-12	10-15	12.4-13.4	17-23
	10	123-133	342-362	8-12	9-14	12.2-13.2	17-23
110	20	112-122	477-497	8-12	12-17	13.6-14.6	17-23
	15	115-125	454-474	8-12	12-17	13.4-14.4	17-23
	10	117-127	432-452	8-12	11-16	13.1-14.1	17-23

1860		Heating					
Entering Water Temp °F	DT	Suction Pressure PSIG	Discharge Pressure PSIG	Super heat	Sub cooling	Water Flow GPM	Air Temp Rise °F DB
30	11	61-71	340-360	8-12	20-25	5.5-6.5	25-31
	8	68-78	337-357	8-12	17-22	8.5-9.5	25-31
	5	73-83	333-353	8-12	14-19	11.5-12.5	25-31
50	12	98-108	333-353	8-12	4-9	5.5-6.5	25-31
	9	105-115	333-353	8-12	3-8	8.5-9.5	25-31
	6	110-120	333-353	8-12	2-7	11.5-12.5	25-31
70	13	135-145	333-353	8-12	1-6	5.5-6.5	25-31
	10	141-151	333-353	8-12	1-6	8.5-9.5	25-31
	7	148-158	333-353	8-12	1-6	11.5-12.5	25-31
90	14	172-182	333-353	8-12	1-6	5.5-6.5	25-31
	11	177-187	333-353	13-17	1-6	8.5-9.5	25-31
	8	184-194	333-353	16-20	1-6	11.5-12.5	25-31

Performance Tables Legend

Abbreviations	Descriptions
CFM/T	Airflow, cubic feet per minute per ton
COP	Coefficient of performance = BTU output/BTU input
DT	Temperature difference
DTL	Temperature difference (load)
DTS	Temperature difference (source)
EAT	Entering air temperature, Fahrenheit (dry bulb/wet bulb)
EER	Energy efficient ratio = BTU output/Watt input
ESP	External static pressure, inches w.g.
EWT	Entering water temperature, °F
EWTL	Entering water temperature (load)
EWTS	Entering water temperature (source)
GPM	Water flow in U.S., gallons per minute
HC	Heating capacity, Mbtuh
HE	Total heat of extraction, Mbtuh
HR	Total heat of rejection, Mbtuh
HW	Hot water (potable)
HWC	Hot water capacity, Mbtuh
HZ	Compressor, hertz
KW	Total power unit input, kilowatts
LAT	Leaving air temperature, °F
LC	Latent cooling capacity, Mbtuh
LWT	Leaving water temperature, °F
LWTL	Leaving water temperature (load)
LWTS	Leaving water temperature (source)
SC	Sensible cooling capacity, Mbtuh
S/T	Sensible to total cooling ratio
TC	Total cooling capacity, Mbtuh
WPD	Water coil pressure drop (ft hd)

Table 13a: Performance Data — Trilogy® VE 0930 - Heating

EWT °F	DT	CFM/T	HC					KW					HE					COP				
			Compressor Speed %					Compressor Speed %					Compressor Speed %					Compressor Speed %				
			30	40	60	80	100	30	40	60	80	100	30	40	60	80	100	30	40	60	80	100
20	6	300	9.0	12.0	18.0	24.0	27.6	0.98	1.19	1.77	2.52	3.01	5.6	8.0	12.0	15.4	17.3	2.7	3.0	3.0	2.8	2.7
	6	400	9.0	12.0	18.0	24.0	27.5	0.87	1.09	1.66	2.37	2.85	6.0	8.3	12.3	15.9	17.8	3.0	3.2	3.2	3.0	2.8
	6	500	9.0	12.0	18.0	24.0	27.5	0.79	1.00	1.57	2.30	2.81	6.3	8.6	12.7	16.1	17.9	3.3	3.5	3.4	3.1	2.9
30	12	300	9.0	12.0	18.0	24.0	29.3	0.95	1.13	1.68	2.38	3.07	5.8	8.1	12.3	15.9	18.8	2.8	3.1	3.1	2.9	2.8
	12	400	9.0	12.0	18.0	24.0	29.5	0.81	1.02	1.55	2.21	2.94	6.2	8.5	12.7	16.5	19.5	3.2	3.4	3.4	3.2	2.9
	12	500	9.0	12.0	18.0	24.0	29.6	0.75	0.94	1.46	2.15	2.92	6.5	8.8	13.0	16.7	19.6	3.5	3.8	3.6	3.3	3.0
	6	300	9.0	12.0	18.0	24.0	30.0	0.89	1.06	1.55	2.19	2.90	6.0	8.4	12.7	16.5	20.1	3.0	3.3	3.4	3.2	3.0
	6	400	9.0	12.0	18.0	24.0	30.0	0.74	0.93	1.40	1.99	2.71	6.5	8.8	13.2	17.2	20.8	3.5	3.8	3.8	3.5	3.2
	6	500	9.0	12.0	18.0	24.0	30.0	0.68	0.85	1.31	1.93	2.68	6.7	9.1	13.5	17.4	20.8	3.9	4.1	4.0	3.6	3.3
40	12	300	9.0	12.0	18.0	24.0	30.0	0.85	1.00	1.47	2.07	2.73	6.1	8.6	13.0	16.9	20.7	3.1	3.5	3.6	3.4	3.2
	12	400	9.0	12.0	18.0	24.0	30.0	0.70	0.87	1.30	1.86	2.52	6.6	9.0	13.5	17.7	21.4	3.8	4.0	4.0	3.8	3.5
	12	500	9.0	12.0	18.0	24.0	30.0	0.64	0.79	1.23	1.80	2.50	6.8	9.3	13.8	17.8	21.5	4.1	4.4	4.3	3.9	3.5
	6	300	9.0	12.0	18.0	24.0	30.0	0.79	0.93	1.35	1.90	2.48	6.3	8.8	13.4	17.5	21.5	3.3	3.8	3.9	3.7	3.5
	6	400	9.0	12.0	18.0	24.0	30.0	0.65	0.80	1.18	1.68	2.27	6.8	9.3	14.0	18.3	22.3	4.1	4.4	4.5	4.2	3.9
	6	500	9.0	12.0	18.0	24.0	30.0	0.59	0.72	1.11	1.63	2.25	7.0	9.5	14.2	18.5	22.3	4.5	4.9	4.8	4.3	3.9
50	13	300	9.0	12.0	18.0	24.0	30.0	0.76	0.89	1.29	1.81	2.37	6.4	9.0	13.6	17.8	21.9	3.5	3.9	4.1	3.9	3.7
	13	400	9.0	12.0	18.0	24.0	30.0	0.62	0.76	1.12	1.59	2.15	6.9	9.4	14.2	18.6	22.6	4.2	4.6	4.7	4.4	4.1
	13	500	9.0	12.0	18.0	24.0	30.0	0.56	0.69	1.05	1.54	2.14	7.1	9.7	14.4	18.7	22.7	4.7	5.1	5.0	4.6	4.1
	7	300	9.0	12.0	18.0	24.0	30.0	0.70	0.82	1.18	1.65	2.15	6.6	9.2	14.0	18.4	22.7	3.7	4.3	4.5	4.3	4.1
	7	400	9.0	12.0	18.0	24.0	30.0	0.58	0.70	1.02	1.44	1.94	7.0	9.6	14.5	19.1	23.4	4.6	5.0	5.2	4.9	4.5
	7	500	9.0	12.0	18.0	24.0	30.0	0.52	0.63	0.95	1.39	1.92	7.2	9.9	14.8	19.2	23.4	5.1	5.6	5.5	5.1	4.6
60	13	300	9.0	12.0	18.0	24.0	30.0	0.67	0.77	1.12	1.56	2.01	6.7	9.4	14.2	18.7	23.2	4.0	4.5	4.7	4.5	4.4
	13	400	9.0	12.0	18.0	24.0	30.0	0.55	0.66	0.96	1.35	1.81	7.1	9.7	14.7	19.4	23.8	4.8	5.3	5.5	5.2	4.9
	13	500	9.0	12.0	18.0	24.0	30.0	0.49	0.59	0.89	1.30	1.79	7.3	10.0	15.0	19.6	23.9	5.4	6.0	5.9	5.4	4.9
	7	300	9.0	12.0	18.0	24.0	30.0	0.61	0.71	1.02	1.42	1.81	6.9	9.6	14.5	19.2	23.8	4.3	5.0	5.2	5.0	4.8
	7	400	9.0	12.0	18.0	24.0	30.0	0.50	0.61	0.87	1.22	1.63	7.3	9.9	15.0	19.8	24.4	5.2	5.8	6.0	5.8	5.4
	7	500	9.0	12.0	18.0	24.0	30.0	0.44	0.54	0.81	1.18	1.62	7.5	10.2	15.2	20.0	24.5	5.9	6.5	6.5	6.0	5.4
70	13	300	9.0	12.0	18.0	24.0	30.0	0.58	0.67	0.96	1.33	1.70	7.0	9.7	14.7	19.5	24.2	4.6	5.3	5.5	5.3	5.2
	13	400	9.0	12.0	18.0	24.0	30.0	0.48	0.57	0.82	1.14	1.52	7.4	10.0	15.2	20.1	24.8	5.5	6.1	6.4	6.2	5.8
	13	500	9.0	12.0	18.0	24.0	30.0	0.42	0.50	0.76	1.10	1.51	7.6	10.3	15.4	20.2	24.9	6.3	7.0	6.9	6.4	5.8
	7	300	9.0	12.0	18.0	24.0	30.0	0.53	0.61	0.88	1.22	1.53	7.2	9.9	15.0	19.8	24.8	5.0	5.8	6.0	5.8	5.7
	7	400	9.0	12.0	18.0	24.0	30.0	0.43	0.52	0.75	1.04	1.38	7.5	10.2	15.4	20.5	25.3	6.1	6.7	7.0	6.8	6.4
	7	500	9.3	12.0	18.0	24.0	30.0	0.38	0.46	0.69	1.00	1.36	8.0	10.4	15.6	20.6	25.4	7.1	7.7	7.6	7.0	6.5
80	13	300	9.0	12.0	18.0	24.0	30.0	0.49	0.58	0.84	1.15	1.43	7.3	10.0	15.1	20.1	25.1	5.3	6.1	6.3	6.1	6.1
	13	400	9.4	12.0	18.0	24.0	30.0	0.41	0.49	0.71	0.98	1.29	8.0	10.3	15.6	20.7	25.6	6.6	7.2	7.5	7.2	6.8
	13	500	9.9	12.0	18.0	24.0	30.0	0.37	0.43	0.65	0.94	1.27	8.6	10.5	15.8	20.8	25.6	7.9	8.3	8.1	7.5	6.9
	7	300	9.4	12.0	18.0	24.0	30.0	0.46	0.53	0.77	1.06	1.30	7.9	10.2	15.4	20.4	25.6	6.0	6.6	6.8	6.6	6.7
	7	400	10.0	12.0	18.0	24.0	30.0	0.38	0.44	0.64	0.89	1.17	8.7	10.5	15.8	21.0	26.0	7.7	8.0	8.2	7.9	7.5
	7	500	10.7	12.0	18.0	24.0	30.0	0.34	0.38	0.59	0.86	1.16	9.5	10.7	16.0	21.1	26.1	9.2	9.3	8.9	8.2	7.6
90	13	300	9.8	12.0	18.0	24.0	30.0	0.44	0.50	0.74	1.01	1.23	8.2	10.3	15.5	20.6	25.8	6.5	7.0	7.1	7.0	7.2
	13	400	10.4	12.0	18.0	24.0	30.0	0.36	0.40	0.60	0.84	1.09	9.2	10.6	15.9	21.1	26.3	8.5	8.7	8.7	8.4	8.0
	13	500	11.2	12.0	18.0	24.0	30.0	0.32	0.35	0.55	0.81	1.09	10.1	10.8	16.1	21.2	26.3	10.2	10.2	9.5	8.7	8.1
	7	300	10.1	12.0	18.0	24.0	30.0	0.42	0.47	0.70	0.95	1.13	8.7	10.4	15.6	20.8	26.1	7.1	7.5	7.6	7.4	7.8
	7	400	10.9	12.0	18.0	24.0	30.0	0.32	0.35	0.54	0.76	1.00	9.8	10.8	16.1	21.4	26.6	10.1	10.1	9.7	9.2	8.8
	7	500	11.9	12.0	18.0	24.0	30.0	0.29	0.29	0.50	0.74	0.99	10.9	11.0	16.3	21.5	26.6	12.0	12.0	10.5	9.5	8.9
100	17	300	10.3	12.0	18.0	24.0	30.0	0.42	0.47	0.70	0.95	1.13	8.9	10.4	15.6	20.8	26.1	7.2	7.5	7.6	7.4	7.8
	17	400	11.2	12.0	18.0	24.0	30.0	0.33	0.35	0.54	0.76	1.00	10.1	10.8	16.1	21.4	26.6	10.1	10.1	9.7	9.2	8.8
	17	500	12.3	12.0	18.0	24.0	30.0	0.30	0.29	0.50	0.74	0.99	11.2	11.0	16.3	21.5	26.6	11.9	12.0	10.5	9.5	8.9
	17	300	10.1	12.0	18.0	24.0	30.0	0.42	0.47	0.70	0.95	1.13	8.7	10.4	15.6	20.8	26.1	7.1	7.5	7.6	7.4	7.8
	17	400	10.9	12.0	18.0	24.0	30.0	0.32	0.35	0.54	0.76	1.00	9.8	10.8	16.1	21.4	26.6	10.1	10.1	9.7	9.2	8.8
	17	500	11.9	12.0	18.0	24.0	30.0	0.29	0.29	0.50	0.74	0.99	10.9	11.0	16.3	21.5	26.6	12.0	12.0	10.5	9.5	8.9
110	27	300	10.3	12.0	18.0	24.0	30.0	0.42	0.47	0.70	0.95	1.13	8.9	10.4	15.6	20.8	26.1	7.2	7.5	7.6	7.4	7.8
	27	400	11.2	12.0	18.0	24.0	30.0	0.33	0.35	0.54	0.76	1.00	10.1	10.8	16.1	21.4	26.6	10.1	10.1	9.7	9.2	8.8
	27	500	12.3	12.0	18.0	24.0	30.0	0.30	0.29	0.50	0.74	0.99	11.2	11.0	16.3	21.5	26.6	11.9	12.0	10.5	9.5	8.9
	27	300	10.1	12.0	18.0	24.0	30.0	0.42	0.47	0.70	0.95	1.13	8.7	10.4	15.6	20.8	26.1	7.1	7.5	7.6	7.4	7.8
	27	400	10.9	12.0	18.0	24.0	30.0	0.32	0.35	0.54	0.76	1.00	9.8	10.8	16.1	21.4	26.6	10.1	10.1	9.7	9.2	8.8
	27	500	11.9	12.0	18.0	24.0	30.0	0.29	0.29	0.50	0.74	0.99	10.9	11.0	16.3	21.5	26.6	12.0	12.0	10.5	9.5	8.9
120	37	300	10.3	12.0	18.0	24.0	30.0	0.42	0.47	0.70	0.95	1.13	8.9	10.4	15.6	20.8	26.1	7.2	7.5	7.6	7.4	7.8
	37	400	11.2	12.0	18.0	24.0	30.0	0.33	0.35	0.54	0.76	1.00	10.1	10.8	16.1	21.4	26.6	10.1	10.1	9.7	9.2	8.8
	37	500	12.3	12.0	18.0	24.0	30.0	0.30	0.29	0.50	0.74	0.99	11.2	11.0	16.3	21.5	26.6	11.9	12.0	10.5	9.5	8.9
	37	300	10.1	12.0	18.0	24.0	30.0	0.42	0.47	0.70	0.95	1.13	8.7	10.4	15.6	20.8	26.1	7.1	7.5	7.6	7.4	7.8
	37	400	10.9	12.0	18.0	24.0	30.0	0.32	0.35	0.54	0.76	1.00	9.8	10.8	16.1	21.4	26.6	10.1	10.1	9.7	9.2	8.8
	37	500	11.9	12.0	18.0	24.0	30.0	0.29	0.29	0.50	0.74	0.99	10.9	11.0	16.3	21.5	26.6	12.0	12.0	10.5	9.5	8.9

* pressure drop is less than 1 ft
Interpolation is permissable, extrapolation is not.
Table does not include fan or pump power corerctions for AHRI/ISO conditions.

Above performance is based on 70°F db entering air condition.
Above data is based on 15% methanol.

Performance Data — Trilogy® VE 0930 - Heating

EWT °F	HZ					LWT(°F)					GPM					WPD(ft. of hd)				
	Compressor Speed %					Compressor Speed %					Compressor Speed %					Compressor Speed %				
	30	40	60	80	100	30	40	60	80	100	30	40	60	80	100	30	40	60	80	100
20	57	71	95	116	130	14.0	14.0	14.0	14.0	14.0	1.9	2.7	4.0	5.1	5.8	*	*	1.7	2.9	3.7
	55	69	94	118	130	14.0	14.0	14.0	14.0	14.0	2.0	2.8	4.1	5.3	5.9	*	*	1.8	3.1	3.9
	54	67	93	117	130	14.0	14.0	14.0	14.0	14.0	2.1	2.9	4.2	5.4	6.0	*	*	1.9	3.2	4.0
30	54	67	90	110	130	18.0	18.0	18.0	18.0	18.0	1.0	1.4	2.0	2.6	3.1	*	*	*	*	*
	52	64	89	111	130	18.0	18.0	18.0	18.0	18.0	1.0	1.4	2.1	2.7	3.3	*	*	*	*	1.0
	50	63	87	111	130	18.0	18.0	18.0	18.0	18.0	1.1	1.5	2.2	2.8	3.3	*	*	*	*	1.0
	49	62	83	102	123	24.0	24.0	24.0	24.0	24.0	2.0	2.8	4.2	5.5	6.7	*	*	1.8	3.2	4.8
	47	59	82	103	121	24.0	24.0	24.0	24.0	24.0	2.2	2.9	4.4	5.7	6.9	*	*	1.9	3.5	5.2
	45	57	80	102	121	24.0	24.0	24.0	24.0	24.0	2.2	3.0	4.5	5.8	6.9	*	*	2.0	3.6	5.2
40	46	58	79	97	117	28.0	28.0	28.0	28.0	28.0	1.0	1.4	2.2	2.8	3.5	*	*	*	*	1.0
	44	55	77	97	115	28.0	28.0	28.0	28.0	28.0	1.1	1.5	2.3	2.9	3.6	*	*	*	*	1.1
	42	53	75	96	114	28.0	28.0	28.0	28.0	28.0	1.1	1.5	2.3	3.0	3.6	*	*	*	*	1.1
	42	53	72	89	109	34.0	34.0	34.0	34.0	34.0	2.1	2.9	4.5	5.8	7.2	*	*	1.9	3.5	5.4
	39	50	71	89	106	34.0	34.0	34.0	34.0	34.0	2.3	3.1	4.7	6.1	7.4	*	*	2.1	3.8	5.8
	38	48	69	88	105	34.0	34.0	34.0	34.0	34.0	2.3	3.2	4.7	6.2	7.4	*	*	2.2	3.9	5.8
50	40	51	69	86	105	37.0	37.0	37.0	37.0	37.0	1.0	1.4	2.1	2.7	3.4	*	*	*	*	*
	37	48	68	86	102	37.0	37.0	37.0	37.0	37.0	1.1	1.4	2.2	2.9	3.5	*	*	*	*	1.0
	36	46	66	85	101	37.0	37.0	37.0	37.0	37.0	1.1	1.5	2.2	2.9	3.5	*	*	*	*	1.0
	36	47	64	79	97	43.0	43.0	43.0	43.0	43.0	1.9	2.6	4.0	5.2	6.5	*	*	1.4	2.7	4.3
	34	44	62	79	94	43.0	43.0	43.0	43.0	43.0	2.0	2.7	4.1	5.5	6.7	*	*	1.5	2.9	4.6
	33	42	61	78	93	43.0	43.0	43.0	43.0	43.0	2.1	2.8	4.2	5.5	6.7	*	*	1.6	3.0	4.6
60	34	44	61	75	93	47.0	47.0	47.0	47.0	47.0	1.0	1.4	2.2	2.9	3.6	*	*	*	*	1.0
	32	41	59	75	90	47.0	47.0	47.0	47.0	47.0	1.1	1.5	2.3	3.0	3.7	*	*	*	*	1.1
	31	40	57	74	88	47.0	47.0	47.0	47.0	47.0	1.1	1.5	2.3	3.0	3.7	*	*	*	*	1.1
	31	41	56	70	86	53.0	53.0	53.0	53.0	53.0	2.0	2.7	4.1	5.5	6.8	*	*	1.5	2.9	4.7
	29	38	54	70	83	53.0	53.0	53.0	53.0	53.0	2.1	2.8	4.3	5.7	7.0	*	*	1.6	3.2	5.0
	28	36	53	68	81	53.0	53.0	53.0	53.0	53.0	2.1	2.9	4.4	5.7	7.0	*	*	1.7	3.2	5.0
70	29	39	53	66	82	57.0	57.0	57.0	57.0	57.0	1.1	1.5	2.3	3.0	3.7	*	*	*	*	1.1
	27	36	51	66	79	57.0	57.0	57.0	57.0	57.0	1.1	1.5	2.3	3.1	3.8	*	*	*	*	1.2
	27	34	50	65	77	57.0	57.0	57.0	57.0	57.0	1.2	1.6	2.4	3.1	3.8	*	*	*	*	1.2
	27	36	50	62	76	63.0	63.0	63.0	63.0	63.0	2.1	2.8	4.3	5.7	7.1	*	*	1.6	3.2	5.1
	25	33	48	62	74	63.0	63.0	63.0	63.0	63.0	2.1	2.9	4.4	5.8	7.2	*	*	1.8	3.4	5.3
	25	32	46	60	72	63.0	63.0	63.0	63.0	63.0	2.3	3.0	4.5	5.9	7.2	*	*	1.8	3.4	5.3
80	25	34	47	59	73	67.0	67.0	67.0	67.0	67.0	1.1	1.5	2.3	3.1	3.9	*	*	*	*	1.3
	25	31	46	59	70	67.0	67.0	67.0	67.0	67.0	1.2	1.6	2.4	3.2	3.9	*	*	*	*	1.3
	25	30	44	57	68	67.0	67.0	67.0	67.0	67.0	1.3	1.6	2.4	3.2	3.9	*	*	*	*	1.3
	25	32	45	55	69	73.0	73.0	73.0	73.0	73.0	2.3	2.9	4.4	5.8	7.3	*	*	1.8	3.4	5.4
	25	29	43	55	66	73.0	73.0	73.0	73.0	73.0	2.5	3.0	4.5	6.0	7.4	*	*	1.9	3.6	5.6
	25	28	41	54	64	73.0	73.0	73.0	73.0	73.0	2.7	3.1	4.6	6.0	7.4	*	*	1.9	3.6	5.6
90	25	31	43	53	66	77.0	77.0	77.0	77.0	77.0	1.3	1.6	2.4	3.2	4.0	*	*	*	*	1.4
	25	28	41	53	64	77.0	77.0	77.0	77.0	77.0	1.4	1.6	2.5	3.3	4.0	*	*	*	*	1.4
	26	27	40	52	62	77.0	77.0	77.0	77.0	77.0	1.6	1.7	2.5	3.3	4.0	*	*	*	*	1.4
	25	30	41	50	63	83.0	83.0	83.0	83.0	83.0	2.5	3.0	4.5	5.9	7.5	*	*	1.9	3.5	5.6
	25	27	39	50	61	83.0	83.0	83.0	83.0	83.0	2.8	3.1	4.6	6.1	7.6	*	*	2.0	3.7	5.8
	26	26	38	49	58	83.0	83.0	83.0	83.0	83.0	3.1	3.1	4.7	6.1	7.6	*	*	2.0	3.8	5.8
100	25	30	41	50	63	83.0	83.0	83.0	83.0	83.0	1.0	1.2	1.8	2.4	3.1	*	*	*	*	*
	26	27	39	50	61	83.0	83.0	83.0	83.0	83.0	1.2	1.3	1.9	2.5	3.1	*	*	*	*	*
	26	26	38	49	58	83.0	83.0	83.0	83.0	83.0	1.3	1.3	1.9	2.5	3.1	*	*	*	*	*
	25	30	41	50	63	83.0	83.0	83.0	83.0	83.0	1.0	1.2	1.8	2.4	3.1	*	*	*	*	*
	25	27	39	50	61	83.0	83.0	83.0	83.0	83.0	1.2	1.3	1.9	2.5	3.1	*	*	*	*	*
	26	26	38	49	58	83.0	83.0	83.0	83.0	83.0	1.3	1.3	1.9	2.5	3.1	*	*	*	*	*
110	25	30	41	50	63	83.0	83.0	83.0	83.0	83.0	0.7	0.8	1.2	1.5	1.9	*	*	*	*	*
	26	27	39	50	61	83.0	83.0	83.0	83.0	83.0	0.7	0.8	1.2	1.6	2.0	*	*	*	*	*
	26	26	38	49	58	83.0	83.0	83.0	83.0	83.0	0.8	0.8	1.2	1.6	2.0	*	*	*	*	*
	25	30	41	50	63	83.0	83.0	83.0	83.0	83.0	0.6	0.8	1.2	1.5	1.9	*	*	*	*	*
	25	27	39	50	61	83.0	83.0	83.0	83.0	83.0	0.7	0.8	1.2	1.6	2.0	*	*	*	*	*
	26	26	38	49	58	83.0	83.0	83.0	83.0	83.0	0.8	0.8	1.2	1.6	2.0	*	*	*	*	*
120	25	30	41	50	63	83.0	83.0	83.0	83.0	83.0	0.5	0.6	0.8	1.1	1.4	*	*	*	*	*
	26	27	39	50	61	83.0	83.0	83.0	83.0	83.0	0.5	0.6	0.9	1.2	1.4	*	*	*	*	*
	26	26	38	49	58	83.0	83.0	83.0	83.0	83.0	0.6	0.6	0.9	1.2	1.4	*	*	*	*	*
	25	30	41	50	63	83.0	83.0	83.0	83.0	83.0	0.5	0.6	0.8	1.1	1.4	*	*	*	*	*
	25	27	39	50	61	83.0	83.0	83.0	83.0	83.0	0.5	0.6	0.9	1.2	1.4	*	*	*	*	*
	26	26	38	49	58	83.0	83.0	83.0	83.0	83.0	0.6	0.6	0.9	1.2	1.4	*	*	*	*	*

* pressure drop is less than 1 ft
Interpolation is permissable, extrapolation is not.
Table does not include fan or pump power corerctions for AHRI/ISO conditions.

Above performance is based on 70°F db entering air condition.
Above data is based on 15% methanol.

Table 13b: Performance Data — Trilogy® VE 0930 - Cooling

EWT °F	DT	CFM/T	TC					SC					S/T					kW					HR				
			Compressor Speed %					Compressor Speed %					Compressor Speed %					Compressor Speed %					Compressor Speed %				
			30	40	60	80	100	30	40	60	80	100	30	40	60	80	100	30	40	60	80	100	30	40	60	80	100
20	45	300	9.0	12.0	18.0	24.0	30.0	5.7	7.9	11.8	15.6	19.9	0.64	0.66	0.66	0.65	0.66	0.17	0.23	0.40	0.63	0.97	9.6	12.8	19.4	26.2	33.3
	45	400	10.0	12.0	18.0	24.0	30.0	7.5	9.0	13.4	17.7	21.3	0.75	0.75	0.75	0.74	0.71	0.15	0.19	0.35	0.60	0.96	10.5	12.7	19.2	26.1	33.3
	45	500	10.6	12.0	18.0	24.0	30.0	9.0	10.3	14.6	17.8	22.3	0.85	0.86	0.81	0.74	0.74	0.15	0.18	0.41	0.71	1.05	11.1	12.6	19.4	26.4	33.6
30	40	300	9.0	12.0	18.0	24.0	30.0	5.8	8.0	11.9	15.6	20.0	0.64	0.67	0.66	0.65	0.67	0.22	0.28	0.46	0.71	1.07	9.7	13.0	19.6	26.4	33.7
	40	400	9.6	12.0	18.0	24.0	30.0	7.2	9.0	13.5	17.8	21.6	0.75	0.75	0.75	0.74	0.72	0.20	0.24	0.41	0.67	1.05	10.3	12.8	19.4	26.3	33.6
	40	500	10.6	12.0	18.0	24.0	30.0	9.3	10.7	15.0	18.4	23.1	0.88	0.89	0.83	0.77	0.77	0.18	0.21	0.44	0.75	1.11	11.2	12.7	19.5	26.6	33.8
	35	300	9.0	12.0	18.0	24.0	30.0	5.7	7.9	11.8	15.6	19.9	0.64	0.66	0.66	0.65	0.66	0.17	0.23	0.40	0.63	0.97	9.6	12.8	19.4	26.2	33.3
	35	400	10.0	12.0	18.0	24.0	30.0	7.5	9.0	13.4	17.7	21.3	0.75	0.75	0.75	0.74	0.71	0.15	0.19	0.35	0.60	0.96	10.5	12.7	19.2	26.1	33.3
	35	500	10.6	12.0	18.0	24.0	30.0	9.0	10.3	14.6	17.8	22.3	0.85	0.86	0.81	0.74	0.74	0.15	0.18	0.41	0.71	1.05	11.1	12.6	19.4	26.4	33.6
40	30	300	9.0	12.0	18.0	24.0	30.0	5.8	8.0	11.9	15.6	20.0	0.64	0.67	0.66	0.65	0.67	0.22	0.28	0.46	0.71	1.07	9.7	13.0	19.6	26.4	33.7
	30	400	9.6	12.0	18.0	24.0	30.0	7.2	9.0	13.5	17.8	21.6	0.75	0.75	0.75	0.74	0.72	0.20	0.24	0.41	0.67	1.05	10.3	12.8	19.4	26.3	33.6
	30	500	10.6	12.0	18.0	24.0	30.0	9.3	10.7	15.0	18.4	23.1	0.88	0.89	0.83	0.77	0.77	0.18	0.21	0.44	0.75	1.11	11.2	12.7	19.5	26.6	33.8
	25	300	9.0	12.0	18.0	24.0	30.0	5.7	7.9	11.8	15.6	19.9	0.64	0.66	0.66	0.65	0.66	0.17	0.23	0.40	0.63	0.97	9.6	12.8	19.4	26.2	33.3
	25	400	10.0	12.0	18.0	24.0	30.0	7.5	9.0	13.4	17.7	21.3	0.75	0.75	0.75	0.74	0.71	0.15	0.19	0.35	0.60	0.96	10.5	12.7	19.2	26.1	33.3
	25	500	10.6	12.0	18.0	24.0	30.0	9.0	10.3	14.6	17.8	22.3	0.85	0.86	0.81	0.74	0.74	0.15	0.18	0.41	0.71	1.05	11.1	12.6	19.4	26.4	33.6
50	20	300	9.0	12.0	18.0	24.0	30.0	5.8	8.0	11.9	15.6	20.0	0.64	0.67	0.66	0.65	0.67	0.22	0.28	0.46	0.71	1.07	9.7	13.0	19.6	26.4	33.7
	20	400	9.6	12.0	18.0	24.0	30.0	7.2	9.0	13.5	17.8	21.6	0.75	0.75	0.75	0.74	0.72	0.20	0.24	0.41	0.67	1.05	10.3	12.8	19.4	26.3	33.6
	20	500	10.6	12.0	18.0	24.0	30.0	9.3	10.7	15.0	18.4	23.1	0.88	0.89	0.83	0.77	0.77	0.18	0.21	0.44	0.75	1.11	11.2	12.7	19.5	26.6	33.8
	15	300	9.0	12.0	18.0	24.0	30.0	5.7	7.9	11.8	15.6	19.9	0.64	0.66	0.66	0.65	0.66	0.17	0.23	0.40	0.63	0.97	9.6	12.8	19.4	26.2	33.3
	15	400	10.0	12.0	18.0	24.0	30.0	7.5	9.0	13.4	17.7	21.3	0.75	0.75	0.75	0.74	0.71	0.15	0.19	0.35	0.60	0.96	10.5	12.7	19.2	26.1	33.3
	15	500	10.6	12.0	18.0	24.0	30.0	9.0	10.3	14.6	17.8	22.3	0.85	0.86	0.81	0.74	0.74	0.15	0.18	0.41	0.71	1.05	11.1	12.6	19.4	26.4	33.6
60	20	300	9.0	12.0	18.0	24.0	30.0	5.9	8.1	11.9	15.7	20.0	0.65	0.67	0.66	0.65	0.67	0.31	0.39	0.60	0.90	1.32	10.1	13.3	20.0	27.1	34.5
	20	400	9.0	12.0	18.0	24.0	30.0	6.8	9.1	13.6	18.0	21.9	0.76	0.75	0.76	0.75	0.73	0.28	0.35	0.54	0.84	1.27	10.0	13.2	19.8	26.9	34.3
	20	500	10.1	12.0	18.0	24.0	30.0	9.1	11.0	15.5	19.1	24.0	0.90	0.92	0.86	0.79	0.80	0.25	0.29	0.53	0.88	1.31	11.0	13.0	19.8	27.0	34.5
	10	300	9.0	12.0	18.0	24.0	30.0	5.8	8.0	11.9	15.6	20.0	0.64	0.67	0.66	0.65	0.67	0.22	0.28	0.46	0.71	1.07	9.7	13.0	19.6	26.4	33.7
	10	400	9.6	12.0	18.0	24.0	30.0	7.2	9.0	13.5	17.8	21.6	0.75	0.75	0.75	0.74	0.72	0.20	0.24	0.41	0.67	1.05	10.3	12.8	19.4	26.3	33.6
	10	500	10.6	12.0	18.0	24.0	30.0	9.3	10.7	15.0	18.4	23.1	0.88	0.89	0.83	0.77	0.77	0.18	0.21	0.44	0.75	1.11	11.2	12.7	19.5	26.6	33.8
70	20	300	9.0	12.0	18.0	24.0	30.0	5.9	8.1	12.0	15.7	20.0	0.66	0.68	0.66	0.65	0.67	0.40	0.51	0.77	1.15	1.66	10.4	13.7	20.6	27.9	35.7
	20	400	9.0	12.0	18.0	24.0	30.0	6.8	9.0	13.7	18.1	22.1	0.75	0.75	0.76	0.76	0.74	0.37	0.45	0.70	1.06	1.57	10.3	13.5	20.4	27.6	35.4
	20	500	9.0	12.0	18.0	24.0	30.0	7.8	11.0	15.5	19.3	24.5	0.86	0.92	0.86	0.80	0.82	0.33	0.40	0.67	1.09	1.60	10.1	13.4	20.3	27.7	35.5
	10	300	9.0	12.0	18.0	24.0	30.0	5.9	8.1	11.9	15.7	20.0	0.65	0.67	0.66	0.65	0.67	0.31	0.39	0.60	0.90	1.32	10.1	13.3	20.0	27.1	34.5
	10	400	9.0	12.0	18.0	24.0	30.0	6.8	9.1	13.6	18.0	21.9	0.76	0.75	0.76	0.75	0.73	0.28	0.35	0.54	0.84	1.27	10.0	13.2	19.8	26.9	34.3
	10	500	10.1	12.0	18.0	24.0	30.0	9.1	11.0	15.5	19.1	24.0	0.90	0.92	0.86	0.79	0.80	0.25	0.29	0.53	0.88	1.31	11.0	13.0	19.8	27.0	34.5
80	20	300	9.0	12.0	18.0	24.0	30.0	5.9	8.1	12.0	15.7	19.9	0.66	0.68	0.66	0.65	0.66	0.50	0.64	0.99	1.46	2.08	10.7	14.2	21.4	29.0	37.1
	20	400	9.0	12.0	18.0	24.0	30.0	6.7	9.0	13.7	18.2	22.2	0.75	0.75	0.76	0.76	0.74	0.46	0.57	0.89	1.35	1.95	10.6	14.0	21.0	28.6	36.7
	20	500	9.0	12.0	18.0	24.0	30.0	7.5	10.8	15.3	19.2	24.5	0.84	0.90	0.85	0.80	0.82	0.44	0.53	0.86	1.36	1.99	10.5	13.8	20.9	28.6	36.8
	10	300	9.0	12.0	18.0	24.0	30.0	5.9	8.1	12.0	15.7	20.0	0.66	0.68	0.66	0.65	0.67	0.40	0.51	0.77	1.15	1.66	10.4	13.7	20.6	27.9	35.7
	10	400	9.0	12.0	18.0	24.0	30.0	6.8	9.0	13.7	18.1	22.1	0.75	0.75	0.76	0.76	0.74	0.37	0.45	0.70	1.06	1.57	10.3	13.5	20.4	27.6	35.4
	10	500	9.0	12.0	18.0	24.0	30.0	7.8	11.0	15.5	19.3	24.5	0.86	0.92	0.86	0.80	0.82	0.33	0.40	0.67	1.09	1.60	10.1	13.4	20.3	27.7	35.5
90	20	300	9.0	12.0	18.0	24.0	30.0	5.9	8.1	12.0	15.7	20.0	0.66	0.68	0.67	0.65	0.67	0.62	0.80	1.25	1.84	2.59	11.1	14.7	22.3	30.3	38.8
	20	400	9.0	12.0	18.0	24.0	30.0	6.7	9.0	13.6	18.2	22.2	0.75	0.75	0.76	0.76	0.74	0.56	0.72	1.14	1.70	2.43	10.9	14.5	21.9	29.8	38.3
	20	500	9.0	12.0	18.0	24.0	30.0	7.4	10.5	15.0	18.9	24.4	0.82	0.88	0.84	0.79	0.81	0.56	0.68	1.09	1.71	2.47	10.9	14.3	21.7	29.8	38.4
	10	300	9.0	12.0	18.0	24.0	30.0	5.9	8.1	12.0	15.7	19.9	0.66	0.68	0.66	0.65	0.66	0.50	0.64	0.99	1.46	2.08	10.7	14.2	21.4	29.0	37.1
	10	400	9.0	12.0	18.0	24.0	30.0	6.7	9.0	13.7	18.2	22.2	0.75	0.75	0.76	0.76	0.74	0.46	0.57	0.89	1.35	1.95	10.6	14.0	21.0	28.6	36.7
	10	500	9.0	12.0	18.0	24.0	30.0	7.5	10.8	15.3	19.2	24.5	0.84	0.90	0.85	0.80	0.82	0.44	0.53	0.86	1.36	1.99	10.5	13.8	20.9	28.6	36.8
100	20	300	9.0	12.0	18.0	24.0	30.0	5.9	8.1	12.0	15.7	20.0	0.66	0.68	0.67	0.66	0.67	0.76	1.00	1.57	2.30	3.21	11.6	15.4	23.4	31.9	41.0
	20	400	9.0	12.0	18.0	24.0	30.0	6.8	9.1	13.7	18.2	22.3	0.76	0.75	0.76	0.76	0.74	0.70	0.91	1.44	2.14	3.01	11.4	15.1	22.9	31.3	40.3
	20	500	9.0	12.0	18.0	24.0	30.0	7.3	10.5	14.9	18.8	24.4	0.82	0.87	0.83	0.78	0.81	0.69	0.85	1.38	2.13	3.05	11.4	14.9	22.7	31.3	40.4
	10	300	9.0	12.0	18.0	24.0	30.0	5.9	8.1	12.0	15.7	20.0	0.66	0.68	0.67	0.65	0.67	0.62	0.80	1.25	1.84	2.59	11.1	14.7	22.3	30.3	38.8
	10	400	9.0	12.0	18.0	24.0	30.0	6.7	9.0	13.6	18.2	22.2	0.75	0.75	0.76	0.76	0.74	0.56	0.72	1.14	1.70	2.43	10.9	14.5	21.9	29.8	38.3
	10	500	9.0	12.0	18.0	24.0	30.0	7.4	10.5	15.0	18.9	24.4	0.82	0.88	0.84	0.79	0.81	0.56	0.68	1.09	1.71	2.47	10.9	14.3	21.7	29.8	38.4
110	20	300	9.0	12.0	18.0	24.0	30.0	5.9	8.2	12.1	15.8	20.1	0.66	0.68	0.67	0.66	0.67	0.93	1.24	1.97	2.86	3.94	12.2	16.2	24.7	33.7	43.5
	20	400	9.0	12.0	18.0	24.0	30.0	7.0	9.2	13.8	18.3	22.3	0.78	0.77	0.77	0.76	0.74	0.86	1.14	1.82	2.67	3.71	11.9	15.9	24.2	33.1	42.7
	20	500	9.0	12.0	18.0	24.0	30.0	7.7	10.7	15.0	18.9	24.5	0.86	0.90	0.84	0.79	0.82	0.84	1.06	1.71	2.62	3.73	11.9	15.6	23.8	32.9	42.7
	10	300	9.0	12.0	18.0	24.0	30.0	5.9	8.1	12.0	15.7	20.0	0.66	0.68	0.67	0.66	0.67	0.76	1.00	1.57	2.30	3.21	11.6	15.4	23.4	31.9	41.0
	10	400	9.0	12.0	18.0	24.0	30.0	6.8	9.1	13.7	18.2	22.3	0.76	0.75	0.76	0.76	0.74	0.70	0.91	1.44	2.14	3.01	11.4	15.1	22.9	31.3	40.3
	10	500	9.0	12.0	18.0	24.0	30.0	7.3	10.5	14.9	18.8	24.4	0.82	0.87	0.83	0.78	0.81	0.69	0.85	1.38	2.13	3.05	11.4	14.9	22.7	31.3	40.4
120	20	300	9.0	12.0	18.0	24.0	27.8	6.0	8.3	12.2	16.0	18.6	0.67	0.69	0.68	0.67	0.67	1.1	1.5	2.4	3.5	4.3	12.9	17.2	26.3	36.0	42.5
	20	400	9.0	12.0	18.0	24.0	28.8	7.4	9.5	14.0	18.4	21.7	0.82	0.80	0.78	0.77	0.75	1.1	1.4	2.3	3.3	4.3	12.7	16.9	25.8	35.3	43.3
	20	500	9.0	12.0	18.0	24.0	30.0	8.7	11.6	15.7	19.4	25.0	0.96	0.96	0.87	0.81	0.83	1.0	1.3	2.1	3.2	4.5	12.4	16.4	25.1	34.9	45.4
	10	300	9.0	12.0	18.0	24.0	30.0	5.9	8.2	12.1	15.8	20.1	0.66	0.68	0.67	0.66	0.67	0.9	1.2	2.0	2.9	3.9	12.2	16.2	24.7	33.7	43.5
	10	400	9.0	12.0	18.0	24.0	30.0	7.0	9.2	13.8	18.3	22.3	0.78	0.77	0.77	0.76	0.74	0.9	1.1	1.8	2.7	3.7	11.9	15.9	24.2	33.1	42.7
	10	500	9.0	12.0	18.0	24.0	30.0	7.7	10.7	15.0	18.9	24.5	0.86	0.90	0.84	0.79	0.82	0.8	1.1	1.7	2.6	3.7	11.9	15.6	23.8	32.9	42.7

* pressure drop is less than 1 ft
Interpolation is permissable, extrapolation is not.
Performance data in shaded area will be reduced for operating voltages below 240 vac.

Above performance is based on 80°F db / 67°F wb entering air conditions.
Above data is based on 15% methanol.
Table does not include fan or pump power corerctions for AHRI/ISO conditions.

Performance Data — Trilogy® VE 0930 - Cooling

EWT °F	EER					Hz					LWT(°F)					GPM					WPD(ft. of hd)				
	Compressor Speed %					Compressor Speed %					Compressor Speed %					Compressor Speed %					Compressor Speed %				
	30	40	60	80	100	30	40	60	80	100	30	40	60	80	100	30	40	60	80	100	30	40	60	80	100
20	53.4	51.5	45.2	37.8	30.9	25	32	50	68	85	65.0	65.0	65.0	65.0	65.0	0.4	0.6	0.9	1.2	1.5	*	*	*	*	*
	64.7	62.3	50.8	39.8	31.3	25	30	46	64	81	65.0	65.0	65.0	65.0	65.0	0.5	0.6	0.9	1.2	1.5	*	*	*	*	*
	72.0	65.8	44.2	33.6	28.6	25	28	45	63	78	65.0	65.0	65.0	65.0	65.0	0.5	0.6	0.9	1.2	1.5	*	*	*	*	*
30	41.2	42.1	39.2	33.7	28.0	25	33	51	69	86	70.0	70.0	70.0	70.0	70.0	0.5	0.6	1.0	1.3	1.7	*	*	*	*	*
	48.1	49.1	43.7	35.7	28.7	25	30	47	64	81	70.0	70.0	70.0	70.0	70.0	0.5	0.6	1.0	1.3	1.7	*	*	*	*	*
	58.9	56.4	41.4	31.9	27.0	25	28	45	63	78	70.0	70.0	70.0	70.0	70.0	0.6	0.6	1.0	1.3	1.7	*	*	*	*	*
	53.4	51.5	45.2	37.8	30.9	25	32	50	68	85	65.0	65.0	65.0	65.0	65.0	0.5	0.7	1.1	1.5	1.9	*	*	*	*	*
	64.7	62.3	50.8	39.8	31.3	25	30	46	64	81	65.0	65.0	65.0	65.0	65.0	0.6	0.7	1.1	1.5	1.9	*	*	*	*	*
	72.0	65.8	44.2	33.6	28.6	25	28	45	63	78	65.0	65.0	65.0	65.0	65.0	0.6	0.7	1.1	1.5	1.9	*	*	*	*	*
40	41.2	42.1	39.2	33.7	28.0	25	33	51	69	86	70.0	70.0	70.0	70.0	70.0	0.6	0.9	1.3	1.8	2.2	*	*	*	*	*
	48.1	49.1	43.7	35.7	28.7	25	30	47	64	81	70.0	70.0	70.0	70.0	70.0	0.7	0.9	1.3	1.8	2.2	*	*	*	*	*
	58.9	56.4	41.4	31.9	27.0	25	28	45	63	78	70.0	70.0	70.0	70.0	70.0	0.7	0.8	1.3	1.8	2.3	*	*	*	*	*
	53.4	51.5	45.2	37.8	30.9	25	32	50	68	85	65.0	65.0	65.0	65.0	65.0	0.8	1.0	1.5	2.1	2.7	*	*	*	*	*
	64.7	62.3	50.8	39.8	31.3	25	30	46	64	81	65.0	65.0	65.0	65.0	65.0	0.8	1.0	1.5	2.1	2.7	*	*	*	*	*
	72.0	65.8	44.2	33.6	28.6	25	28	45	63	78	65.0	65.0	65.0	65.0	65.0	0.9	1.0	1.6	2.1	2.7	*	*	*	*	*
50	41.2	42.1	39.2	33.7	28.0	25	33	51	69	86	70.0	70.0	70.0	70.0	70.0	1.0	1.3	2.0	2.6	3.4	*	*	*	*	*
	48.1	49.1	43.7	35.7	28.7	25	30	47	64	81	70.0	70.0	70.0	70.0	70.0	1.0	1.3	1.9	2.6	3.4	*	*	*	*	*
	58.9	56.4	41.4	31.9	27.0	25	28	45	63	78	70.0	70.0	70.0	70.0	70.0	1.1	1.3	1.9	2.7	3.4	*	*	*	*	*
	53.4	51.5	45.2	37.8	30.9	25	32	50	68	85	65.0	65.0	65.0	65.0	65.0	1.3	1.7	2.6	3.5	4.4	*	*	*	*	1.8
	64.7	62.3	50.8	39.8	31.3	25	30	46	64	81	65.0	65.0	65.0	65.0	65.0	1.4	1.7	2.6	3.5	4.4	*	*	*	*	1.8
	72.0	65.8	44.2	33.6	28.6	25	28	45	63	78	65.0	65.0	65.0	65.0	65.0	1.5	1.7	2.6	3.5	4.5	*	*	*	1.0	1.8
60	28.9	30.8	30.1	26.6	22.7	27	35	54	73	90	80.0	80.0	80.0	80.0	80.0	1.0	1.3	2.0	2.7	3.5	*	*	*	*	1.0
	31.9	34.8	33.3	28.5	23.6	25	32	49	67	83	80.0	80.0	80.0	80.0	80.0	1.0	1.3	2.0	2.7	3.4	*	*	*	*	1.0
	40.2	41.0	34.1	27.2	23.0	25	29	46	64	79	80.0	80.0	80.0	80.0	80.0	1.1	1.3	2.0	2.7	3.4	*	*	*	*	1.0
	41.2	42.1	39.2	33.7	28.0	25	33	51	69	86	70.0	70.0	70.0	70.0	70.0	1.9	2.6	3.9	5.3	6.7	*	*	1.3	2.7	4.6
	48.1	49.1	43.7	35.7	28.7	25	30	47	64	81	70.0	70.0	70.0	70.0	70.0	2.1	2.6	3.9	5.3	6.7	*	*	1.3	2.7	4.6
	58.9	56.4	41.4	31.9	27.0	25	28	45	63	78	70.0	70.0	70.0	70.0	70.0	2.2	2.5	3.9	5.3	6.8	*	*	1.3	2.7	4.6
70	22.3	23.8	23.3	20.9	18.1	30	38	58	77	95	90.0	90.0	90.0	90.0	90.0	1.0	1.4	2.1	2.8	3.6	*	*	*	*	1.1
	24.5	26.6	25.8	22.5	19.1	27	35	52	70	87	90.0	90.0	90.0	90.0	90.0	1.0	1.4	2.0	2.8	3.5	*	*	*	*	1.1
	27.1	30.3	26.9	22.1	18.8	25	32	49	67	84	90.0	90.0	90.0	90.0	90.0	1.0	1.3	2.0	2.8	3.5	*	*	*	*	1.1
	28.9	30.8	30.1	26.6	22.7	27	35	54	73	90	80.0	80.0	80.0	80.0	80.0	2.0	2.7	4.0	5.4	6.9	*	*	1.4	2.9	4.8
	31.9	34.8	33.3	28.5	23.6	25	32	49	67	83	80.0	80.0	80.0	80.0	80.0	2.0	2.6	4.0	5.4	6.9	*	*	1.4	2.8	4.8
	40.2	41.0	34.1	27.2	23.0	25	29	46	64	79	80.0	80.0	80.0	80.0	80.0	2.2	2.6	4.0	5.4	6.9	*	*	1.4	2.9	4.8
80	17.9	18.8	18.3	16.5	14.5	33	42	62	83	102	100.0	100.0	100.0	100.0	100.0	1.1	1.4	2.1	2.9	3.7	*	*	*	*	1.2
	19.6	20.9	20.2	17.8	15.4	30	38	56	76	93	100.0	100.0	100.0	100.0	100.0	1.1	1.4	2.1	2.9	3.7	*	*	*	*	1.2
	20.5	22.9	21.0	17.6	15.1	28	35	53	72	90	100.0	100.0	100.0	100.0	100.0	1.0	1.4	2.1	2.9	3.7	*	*	*	*	1.2
	22.3	23.8	23.3	20.9	18.1	30	38	58	77	95	90.0	90.0	90.0	90.0	90.0	2.1	2.7	4.1	5.6	7.1	*	*	1.6	3.1	5.1
	24.5	26.6	25.8	22.5	19.1	27	35	52	70	87	90.0	90.0	90.0	90.0	90.0	2.1	2.7	4.1	5.5	7.1	*	*	1.5	3.0	5.1
	27.1	30.3	26.9	22.1	18.8	25	32	49	67	84	90.0	90.0	90.0	90.0	90.0	2.0	2.7	4.1	5.5	7.1	*	*	1.5	3.0	5.1
90	14.6	15.0	14.4	13.1	11.6	36	46	68	90	110	110.0	110.0	110.0	110.0	110.0	1.1	1.5	2.2	3.0	3.9	*	*	*	*	1.4
	16.0	16.6	15.8	14.1	12.3	32	41	62	82	101	110.0	110.0	110.0	110.0	110.0	1.1	1.4	2.2	3.0	3.8	*	*	*	*	1.4
	16.1	17.7	16.4	14.0	12.1	31	39	58	79	98	110.0	110.0	110.0	110.0	110.0	1.1	1.4	2.2	3.0	3.8	*	*	*	*	1.4
	17.9	18.8	18.3	16.5	14.5	33	42	62	83	102	100.0	100.0	100.0	100.0	100.0	2.1	2.8	4.3	5.8	7.4	*	*	1.7	3.3	5.5
	19.6	20.9	20.2	17.8	15.4	30	38	56	76	93	100.0	100.0	100.0	100.0	100.0	2.1	2.8	4.2	5.7	7.3	*	*	1.7	3.3	5.4
	20.5	22.9	21.0	17.6	15.1	28	35	53	72	90	100.0	100.0	100.0	100.0	100.0	2.1	2.8	4.2	5.7	7.4	*	*	1.6	3.3	5.4
100	11.9	12.0	11.4	10.4	9.3	39	50	74	97	119	120.0	120.0	120.0	120.0	120.0	1.2	1.5	2.3	3.2	4.1	*	*	*	*	1.6
	12.9	13.2	12.5	11.2	10.0	35	45	68	90	110	120.0	120.0	120.0	120.0	120.0	1.1	1.5	2.3	3.1	4.0	*	*	*	*	1.5
	13.0	14.0	13.0	11.3	9.8	34	42	63	86	107	120.0	120.0	120.0	120.0	120.0	1.1	1.5	2.3	3.1	4.0	*	*	*	*	1.5
	14.6	15.0	14.4	13.1	11.6	36	46	68	90	110	110.0	110.0	110.0	110.0	110.0	2.2	2.9	4.5	6.1	7.8	*	*	1.9	3.7	6.0
	16.0	16.6	15.8	14.1	12.3	32	41	62	82	101	110.0	110.0	110.0	110.0	110.0	2.2	2.9	4.4	6.0	7.7	*	*	1.8	3.5	5.8
	16.1	17.7	16.4	14.0	12.1	31	39	58	79	98	110.0	110.0	110.0	110.0	110.0	2.2	2.9	4.3	6.0	7.7	*	*	1.8	3.5	5.9
110	9.7	9.7	9.2	8.4	7.6	41	54	79	105	128	130.0	130.0	130.0	130.0	130.0	1.2	1.6	2.5	3.4	4.3	*	*	*	1.0	1.7
	10.4	10.5	9.9	9.0	8.1	38	50	75	100	122	130.0	130.0	130.0	130.0	130.0	1.2	1.6	2.4	3.3	4.3	*	*	*	*	1.6
	10.8	11.4	10.5	9.2	8.0	36	46	69	94	117	130.0	130.0	130.0	130.0	130.0	1.2	1.6	2.4	3.3	4.3	*	*	*	*	1.6
	11.9	12.0	11.4	10.4	9.3	39	50	74	97	119	120.0	120.0	120.0	120.0	120.0	2.3	3.1	4.7	6.4	8.2	*	*	2.1	4.0	6.6
	12.9	13.2	12.5	11.2	10.0	35	45	68	90	110	120.0	120.0	120.0	120.0	120.0	2.3	3.0	4.6	6.3	8.1	*	*	2.0	3.9	6.4
	13.0	14.0	13.0	11.3	9.8	34	42	63	86	107	120.0	120.0	120.0	120.0	120.0	2.3	3.0	4.5	6.3	8.1	*	*	2.0	3.9	6.4
120	7.9	7.8	7.4	6.8	6.5	44	57	85	113	130	140.0	140.0	140.0	140.0	140.0	1.3	1.7	2.6	3.6	4.3	0.1	0.1	0.4	1.0	1.5
	8.3	8.4	7.9	7.3	6.7	41	54	83	110	130	140.0	140.0	140.0	140.0	140.0	1.3	1.7	2.6	3.5	4.3	0.1	0.1	0.4	1.0	1.6
	9.1	9.4	8.6	7.5	6.7	38	48	74	101	127	140.0	140.0	140.0	140.0	140.0	1.2	1.6	2.5	3.5	4.5	0.1	0.1	0.4	0.9	1.8
	9.7	9.7	9.2	8.4	7.6	41	54	79	105	128	130.0	130.0	130.0	130.0	130.0	2.4	3.2	4.9	6.7	8.7	0.4	0.9	2.3	4.4	7.2
	10.4	10.5	9.9	9.0	8.1	38	50	75	100	122	130.0	130.0	130.0	130.0	130.0	2.4	3.2	4.8	6.6	8.5	0.4	0.8	2.2	4.2	7.0
	10.8	11.4	10.5	9.2	8.0	36	46	69	94	117	130.0	130.0	130.0	130.0	130.0	2.4	3.1	4.8	6.6	8.5	0.4	0.8	2.1	4.2	7.0

* pressure drop is less than 1 ft
Interpolation is permissable, extrapolation is not.
Performance data in shaded area will be reduced for operating voltages below 240 vac.

Above performance is based on 80°F db / 67°F wb entering air conditions.
Above data is based on 15% methanol.
Table does not include fan or pump power corerctions for AHRI/ISO conditions.

Table 14a: Performance Data — Trilogy® VE 1860 - Heating

EWT °F	DT	CFM/T	TC					KW					HE					COP				
			Compressor Speed %					Compressor Speed %					Compressor Speed %					Compressor Speed %				
			30	40	60	80	100	30	40	60	80	100	30	40	60	80	100	30	40	60	80	100
20	6	300	18.0	24.0	36.0	48.0	57.0	2.0	2.6	4.0	5.6	6.9	11.0	15.0	22.2	28.8	33.6	2.6	2.7	2.6	2.5	2.4
	6	400	18.0	24.0	36.0	48.0	60.0	1.8	2.3	3.7	5.2	6.9	12.0	16.0	23.5	30.3	36.5	3.0	3.0	2.9	2.7	2.6
	6	500	18.0	24.0	36.0	48.0	60.0	1.6	2.2	3.4	5.0	6.8	12.6	16.7	24.2	31.0	37.0	3.3	3.3	3.1	2.8	2.6
30	12	300	18.0	24.0	36.0	48.0	60.0	1.94	2.47	3.79	5.29	6.82	11.4	15.6	23.1	29.9	36.7	2.7	2.8	2.8	2.7	2.6
	12	400	18.0	24.0	36.0	48.0	60.0	1.65	2.18	3.39	4.82	6.42	12.4	16.6	24.4	31.6	38.1	3.2	3.2	3.1	2.9	2.7
	12	500	18.0	24.0	36.0	48.0	60.0	1.48	2.01	3.21	4.64	6.34	12.9	17.1	25.0	32.2	38.4	3.6	3.5	3.3	3.0	2.8
	6	300	18.0	24.0	36.0	48.0	60.0	1.79	2.26	3.44	4.82	6.20	11.9	16.3	24.3	31.6	38.8	2.9	3.1	3.1	2.9	2.8
	6	400	18.0	24.0	36.0	48.0	60.0	1.51	1.96	3.05	4.34	5.81	12.9	17.3	25.6	33.2	40.2	3.5	3.6	3.5	3.2	3.0
	6	500	18.0	24.0	36.0	48.0	60.0	1.35	1.82	2.89	4.19	5.76	13.4	17.8	26.1	33.7	40.3	3.9	3.9	3.7	3.4	3.1
40	12	300	18.0	24.0	36.0	48.0	60.0	1.70	2.12	3.23	4.52	5.83	12.2	16.7	25.0	32.6	40.1	3.1	3.3	3.3	3.1	3.0
	12	400	18.0	24.0	36.0	48.0	60.0	1.42	1.83	2.84	4.05	5.43	13.2	17.7	26.3	34.2	41.5	3.7	3.8	3.7	3.5	3.2
	12	500	18.0	24.0	36.0	48.0	60.0	1.28	1.70	2.69	3.92	5.41	13.6	18.2	26.8	34.6	41.5	4.1	4.1	3.9	3.6	3.2
	6	300	18.0	24.0	36.0	48.0	60.0	1.57	1.94	2.94	4.12	5.31	12.6	17.4	26.0	33.9	41.9	3.4	3.6	3.6	3.4	3.3
	6	400	18.0	24.0	36.0	48.0	60.0	1.30	1.66	2.55	3.65	4.93	13.6	18.3	27.3	35.5	43.2	4.1	4.2	4.1	3.9	3.6
	6	500	18.0	24.0	36.0	48.0	60.0	1.16	1.53	2.42	3.54	4.94	14.0	18.8	27.7	35.9	43.2	4.5	4.6	4.4	4.0	3.6
50	13	300	18.0	24.0	36.0	48.0	60.0	1.51	1.86	2.80	3.93	5.07	12.9	17.7	26.4	34.6	42.7	3.5	3.8	3.8	3.6	3.5
	13	400	18.0	24.0	36.0	48.0	60.0	1.24	1.58	2.42	3.47	4.70	13.8	18.6	27.7	36.2	44.0	4.2	4.5	4.4	4.1	3.7
	13	500	18.0	24.0	36.0	48.0	60.0	1.11	1.46	2.30	3.37	4.72	14.2	19.0	28.2	36.5	43.9	4.7	4.8	4.6	4.2	3.7
	7	300	18.0	24.0	36.0	48.0	60.0	1.39	1.70	2.55	3.59	4.64	13.2	18.2	27.3	35.7	44.2	3.8	4.1	4.1	3.9	3.8
	7	400	18.0	24.0	36.0	48.0	60.0	1.14	1.43	2.19	3.15	4.28	14.1	19.1	28.5	37.3	45.4	4.6	4.9	4.8	4.5	4.1
	7	500	18.0	24.0	36.0	48.0	60.0	1.02	1.31	2.07	3.06	4.33	14.5	19.5	28.9	37.5	45.2	5.2	5.4	5.1	4.6	4.1
60	13	300	18.0	24.0	36.0	48.0	60.0	1.32	1.60	2.40	3.39	4.38	13.5	18.5	27.8	36.4	45.1	4.0	4.4	4.4	4.2	4.0
	13	400	18.0	24.0	36.0	48.0	60.0	1.08	1.34	2.04	2.95	4.04	14.3	19.4	29.0	37.9	46.2	4.9	5.2	5.2	4.8	4.4
	13	500	18.0	24.0	36.0	48.0	60.0	0.95	1.23	1.93	2.88	4.10	14.7	19.8	29.4	38.2	46.0	5.5	5.7	5.5	4.9	4.3
	7	300	18.0	24.0	36.0	48.0	60.0	1.21	1.46	2.19	3.11	4.03	13.9	19.0	28.5	37.4	46.3	4.4	4.8	4.8	4.5	4.4
	7	400	18.0	24.0	36.0	48.0	60.0	0.98	1.22	1.85	2.70	3.72	14.6	19.9	29.7	38.8	47.3	5.4	5.8	5.7	5.2	4.7
	7	500	18.0	24.0	36.0	48.0	60.0	0.86	1.10	1.75	2.63	3.80	15.1	20.2	30.0	39.0	47.0	6.1	6.4	6.0	5.3	4.6
70	13	300	18.0	24.0	36.0	48.0	60.0	1.14	1.37	2.07	2.94	3.82	14.1	19.3	29.0	38.0	47.0	4.6	5.1	5.1	4.8	4.6
	13	400	18.0	24.0	36.0	48.0	60.0	0.92	1.14	1.74	2.55	3.53	14.9	20.1	30.1	39.3	48.0	5.7	6.2	6.1	5.5	5.0
	13	500	18.0	24.0	36.0	48.0	60.0	0.80	1.03	1.64	2.49	3.63	15.3	20.5	30.4	39.5	47.6	6.6	6.9	6.4	5.6	4.8
	7	300	18.0	24.0	36.0	48.0	60.0	1.04	1.24	1.89	2.72	3.55	14.5	19.8	29.5	38.7	47.9	5.1	5.7	5.6	5.2	4.9
	7	400	18.6	24.0	36.0	48.0	60.0	0.85	1.02	1.58	2.35	3.29	15.8	20.5	30.6	40.0	48.8	6.5	6.9	6.7	6.0	5.3
	7	500	19.2	24.0	36.0	48.0	60.0	0.75	0.91	1.49	2.30	3.40	16.7	20.9	30.9	40.1	48.4	7.5	7.7	7.1	6.1	5.2
80	13	300	18.8	24.0	36.0	48.0	60.0	0.99	1.16	1.79	2.59	3.40	15.5	20.1	29.9	39.2	48.4	5.6	6.1	5.9	5.4	5.2
	13	400	19.9	24.0	36.0	48.0	60.0	0.81	0.95	1.49	2.24	3.16	17.1	20.8	30.9	40.4	49.2	7.2	7.4	7.1	6.3	5.6
	13	500	20.5	24.0	36.0	48.0	60.0	0.72	0.84	1.39	2.20	3.28	18.0	21.1	31.2	40.5	48.8	8.3	8.4	7.6	6.4	5.4
	7	300	20.6	24.0	36.0	48.0	60.0	0.92	1.04	1.64	2.42	3.20	17.5	20.5	30.4	39.7	49.1	6.6	6.8	6.4	5.8	5.5
	7	400	21.7	24.0	36.0	48.0	60.0	0.76	0.83	1.36	2.09	2.99	19.1	21.2	31.4	40.9	49.8	8.4	8.4	7.8	6.7	5.9
	7	500	22.3	24.0	36.0	48.0	60.0	0.68	0.73	1.27	2.06	3.13	20.0	21.5	31.7	41.0	49.3	9.7	9.6	8.3	6.8	5.6
90	13	300	21.7	24.0	36.0	48.0	60.0	0.88	0.96	1.55	2.33	3.10	18.7	20.7	30.7	40.1	49.4	7.3	7.4	6.8	6.0	5.7
	13	400	22.8	24.0	36.0	48.0	60.0	0.72	0.76	1.28	2.00	2.90	20.4	21.4	31.6	41.2	50.1	9.3	9.3	8.2	7.0	6.1
	13	500	23.4	24.0	36.0	48.0	60.0	0.64	0.66	1.20	1.98	3.06	21.2	21.7	31.9	41.2	49.6	10.7	10.6	8.8	7.1	5.7
	7	300	23.0	24.0	36.0	48.0	60.0	0.80	0.84	1.43	2.20	2.97	20.3	21.1	31.1	40.5	49.9	8.4	8.4	7.4	6.4	5.9
	7	400	24.2	24.2	36.0	48.0	60.0	0.64	0.64	1.17	1.90	2.80	22.0	22.0	32.0	41.5	50.4	11.0	11.0	9.1	7.4	6.3
	7	500	24.7	24.7	36.0	48.0	60.0	0.58	0.58	1.09	1.89	2.98	22.7	22.7	32.3	41.5	49.8	12.5	12.5	9.6	7.4	5.9
100	17	300	23.0	24.0	36.0	48.0	60.0	0.80	0.84	1.43	2.20	2.97	20.3	21.1	31.1	40.5	49.9	8.4	8.4	7.4	6.4	5.9
	17	400	24.2	24.0	36.0	48.0	60.0	0.64	0.64	1.17	1.90	2.80	22.0	21.8	32.0	41.5	50.4	11.0	11.0	9.1	7.4	6.3
	17	500	24.7	24.0	36.0	48.0	60.0	0.58	0.55	1.09	1.89	2.98	22.7	22.1	32.3	41.5	49.8	12.5	12.7	9.6	7.4	5.9
	17	300	23.0	24.0	36.0	48.0	60.0	0.80	0.84	1.43	2.20	2.97	20.3	21.1	31.1	40.5	49.9	8.4	8.4	7.4	6.4	5.9
	17	400	24.2	24.0	36.0	48.0	60.0	0.64	0.64	1.17	1.90	2.80	22.0	21.8	32.0	41.5	50.4	11.0	11.0	9.1	7.4	6.3
	17	500	24.7	24.0	36.0	48.0	60.0	0.58	0.55	1.09	1.89	2.98	22.7	22.1	32.3	41.5	49.8	12.5	12.7	9.6	7.4	5.9
110	27	300	23.0	24.0	36.0	48.0	60.0	0.80	0.84	1.43	2.20	2.97	20.3	21.1	31.1	40.5	49.9	8.4	8.4	7.4	6.4	5.9
	27	400	24.2	24.0	36.0	48.0	60.0	0.64	0.64	1.17	1.90	2.80	22.0	21.8	32.0	41.5	50.4	11.0	11.0	9.1	7.4	6.3
	27	500	24.7	24.0	36.0	48.0	60.0	0.58	0.55	1.09	1.89	2.98	22.7	22.1	32.3	41.5	49.8	12.5	12.7	9.6	7.4	5.9
	27	300	23.0	24.0	36.0	48.0	60.0	0.80	0.84	1.43	2.20	2.97	20.3	21.1	31.1	40.5	49.9	8.4	8.4	7.4	6.4	5.9
	27	400	24.2	24.0	36.0	48.0	60.0	0.64	0.64	1.17	1.90	2.80	22.0	21.8	32.0	41.5	50.4	11.0	11.0	9.1	7.4	6.3
	27	500	24.7	24.0	36.0	48.0	60.0	0.58	0.55	1.09	1.89	2.98	22.7	22.1	32.3	41.5	49.8	12.5	12.7	9.6	7.4	5.9
120	37	300	23.0	24.0	36.0	48.0	60.0	0.80	0.84	1.43	2.20	2.97	20.3	21.1	31.1	40.5	49.9	8.4	8.4	7.4	6.4	5.9
	37	400	24.2	24.0	36.0	48.0	60.0	0.64	0.64	1.17	1.90	2.80	22.0	21.8	32.0	41.5	50.4	11.0	11.0	9.1	7.4	6.3
	37	500	24.7	24.0	36.0	48.0	60.0	0.58	0.55	1.09	1.89	2.98	22.7	22.1	32.3	41.5	49.8	12.5	12.7	9.6	7.4	5.9
	37	300	23.0	24.0	36.0	48.0	60.0	0.80	0.84	1.43	2.20	2.97	20.3	21.1	31.1	40.5	49.9	8.4	8.4	7.4	6.4	5.9
	37	400	24.2	24.0	36.0	48.0	60.0	0.64	0.64	1.17	1.90	2.80	22.0	21.8	32.0	41.5	50.4	11.0	11.0	9.1	7.4	6.3
	37	500	24.7	24.0	36.0	48.0	60.0	0.58	0.55	1.09	1.89	2.98	22.7	22.1	32.3	41.5	49.8	12.5	12.7	9.6	7.4	5.9

* pressure drop is less than 1 ft
Interpolation is permissable, extrapolation is not.
Performance data in shaded area will be reduced for operating voltages below 240 vac.

Above performance is based on 70°F db entering air condition.
Above data is based on 15% methanol.
Table does not include fan or pump power corerctions for AHRI/ISO conditions.

Performance Data — Trilogy® VE 1860 - Heating

EWT °F	HZ					LWT(°F)					GPM					WPD(ft. of hd)				
	Compressor Speed %					Compressor Speed %					Compressor Speed %					Compressor Speed %				
	30	40	60	80	100	30	40	60	80	100	30	40	60	80	100	30	40	60	80	100
20	43	52	77	102	116	14.0	14.0	14.0	14.0	14.0	3.7	5.0	7.4	9.6	11.2	0.2	0.6	2.2	4.7	7.1
	42	54	78	100	120	14.0	14.0	14.0	14.0	14.0	4.0	5.3	7.8	10.1	12.2	0.2	0.7	2.6	5.4	8.9
	41	53	78	99	118	14.0	14.0	14.0	14.0	14.0	4.2	5.6	8.1	10.3	12.3	0.3	0.8	2.9	5.8	9.1
30	40	49	72	97	113	18.0	18.0	18.0	18.0	18.0	1.9	2.6	3.8	5.0	6.1	*	*	*	*	1.2
	40	51	74	95	114	18.0	18.0	18.0	18.0	18.0	2.1	2.8	4.1	5.3	6.3	*	*	*	*	1.3
	38	50	73	94	112	18.0	18.0	18.0	18.0	18.0	2.2	2.9	4.2	5.4	6.4	*	*	*	*	1.3
	36	44	67	89	105	24.0	24.0	24.0	24.0	24.0	4.0	5.4	8.1	10.5	12.9	*	*	2.7	5.8	10.0
	36	47	68	87	105	24.0	24.0	24.0	24.0	24.0	4.3	5.8	8.5	11.1	13.4	*	*	3.2	6.6	10.9
	35	46	67	86	103	24.0	24.0	24.0	24.0	24.0	4.5	5.9	8.7	11.2	13.4	*	*	3.4	6.9	11.0
40	34	42	63	85	100	28.0	28.0	28.0	28.0	28.0	2.0	2.8	4.2	5.4	6.7	*	*	*	*	1.4
	34	44	64	83	99	28.0	28.0	28.0	28.0	28.0	2.2	3.0	4.4	5.7	6.9	*	*	*	*	1.6
	33	43	63	81	98	28.0	28.0	28.0	28.0	28.0	2.3	3.0	4.5	5.8	6.9	*	*	*	*	1.6
	31	38	58	79	93	34.0	34.0	34.0	34.0	34.0	4.2	5.8	8.7	11.3	14.0	*	*	3.2	6.8	11.7
	31	40	58	76	92	34.0	34.0	34.0	34.0	34.0	4.5	6.1	9.1	11.8	14.4	*	1.0	3.7	7.6	12.7
	30	39	57	74	90	34.0	34.0	34.0	34.0	34.0	4.7	6.3	9.2	12.0	14.4	*	1.1	3.9	7.9	12.6
50	30	36	56	76	90	37.0	37.0	37.0	37.0	37.0	2.0	2.7	4.1	5.3	6.6	*	*	*	*	1.3
	29	38	56	73	88	37.0	37.0	37.0	37.0	37.0	2.1	2.9	4.3	5.6	6.8	*	*	*	*	1.4
	29	37	55	71	86	37.0	37.0	37.0	37.0	37.0	2.2	2.9	4.3	5.6	6.8	*	*	*	*	1.4
	27	33	52	71	84	43.0	43.0	43.0	43.0	43.0	3.8	5.2	7.8	10.2	12.6	*	*	2.2	4.9	8.8
	27	35	51	67	81	43.0	43.0	43.0	43.0	43.0	4.0	5.5	8.2	10.6	13.0	*	*	2.6	5.6	9.4
	26	34	50	65	79	43.0	43.0	43.0	43.0	43.0	4.2	5.6	8.3	10.7	12.9	*	*	2.7	5.7	9.3
60	26	32	49	68	80	47.0	47.0	47.0	47.0	47.0	2.1	2.9	4.3	5.6	6.9	*	*	*	*	1.5
	25	32	48	63	77	47.0	47.0	47.0	47.0	47.0	2.2	3.0	4.5	5.8	7.1	*	*	*	*	1.6
	24	32	47	62	75	47.0	47.0	47.0	47.0	47.0	2.3	3.0	4.5	5.9	7.1	*	*	*	*	1.6
	24	29	46	64	75	53.0	53.0	53.0	53.0	53.0	4.0	5.4	8.1	10.7	13.2	*	*	2.5	5.4	9.6
	23	29	44	58	72	53.0	53.0	53.0	53.0	53.0	4.2	5.7	8.5	11.1	13.5	*	*	2.8	6.0	10.2
	22	29	42	57	70	53.0	53.0	53.0	53.0	53.0	4.3	5.8	8.6	11.1	13.4	*	*	2.9	6.1	10.1
70	23	28	43	61	72	57.0	57.0	57.0	57.0	57.0	2.2	3.0	4.5	5.8	7.2	*	*	*	*	1.7
	21	28	41	55	68	57.0	57.0	57.0	57.0	57.0	2.3	3.1	4.6	6.0	7.4	*	*	*	*	1.8
	21	27	40	54	67	57.0	57.0	57.0	57.0	57.0	2.3	3.2	4.7	6.1	7.3	*	*	*	1.0	1.8
	22	26	41	57	68	63.0	63.0	63.0	63.0	63.0	4.1	5.6	8.4	11.1	13.7	*	*	2.7	5.9	10.3
	20	25	38	51	64	63.0	63.0	63.0	63.0	63.0	4.5	5.9	8.7	11.4	13.9	*	*	3.0	6.4	10.8
	20	24	37	50	63	63.0	63.0	63.0	63.0	63.0	4.8	6.0	8.8	11.5	13.8	*	*	3.1	6.5	10.6
80	21	25	39	55	65	67.0	67.0	67.0	67.0	67.0	2.4	3.1	4.6	6.0	7.4	*	*	*	*	1.8
	20	24	36	49	62	67.0	67.0	67.0	67.0	67.0	2.6	3.2	4.8	6.2	7.6	*	*	*	1.0	1.9
	20	23	35	47	60	67.0	67.0	67.0	67.0	67.0	2.8	3.3	4.8	6.2	7.5	*	*	*	1.0	1.9
	21	23	36	52	62	73.0	73.0	73.0	73.0	73.0	5.0	5.8	8.7	11.4	14.0	*	*	2.9	6.2	10.7
	20	22	33	46	59	73.0	73.0	73.0	73.0	73.0	5.5	6.0	9.0	11.7	14.2	*	*	3.2	6.6	11.1
	20	21	32	45	58	73.0	73.0	73.0	73.0	73.0	5.7	6.1	9.0	11.7	14.1	*	1.0	3.3	6.7	10.9
90	20	22	35	50	59	77.0	77.0	77.0	77.0	77.0	2.9	3.2	4.7	6.2	7.6	*	*	*	1.0	1.9
	20	21	32	44	57	77.0	77.0	77.0	77.0	77.0	3.1	3.3	4.9	6.3	7.7	*	*	*	1.1	2.0
	20	20	31	43	56	77.0	77.0	77.0	77.0	77.0	3.3	3.3	4.9	6.3	7.6	*	*	*	1.1	2.0
	20	20	32	47	56	83.0	83.0	83.0	83.0	83.0	5.8	6.0	8.9	11.6	14.2	*	*	3.1	6.4	11.0
	20	20	30	43	56	83.0	83.0	83.0	83.0	83.0	6.3	6.3	9.1	11.9	14.4	1.1	1.1	3.3	6.8	11.3
	20	20	30	42	55	83.0	83.0	83.0	83.0	83.0	6.5	6.5	9.2	11.9	14.2	1.2	1.2	3.4	6.8	11.0
100	20	20	32	47	56	83.0	83.0	83.0	83.0	83.0	2.4	2.5	3.7	4.8	5.9	*	*	*	*	*
	20	20	30	43	56	83.0	83.0	83.0	83.0	83.0	2.6	2.6	3.8	4.9	5.9	*	*	*	*	*
	20	20	30	42	55	83.0	83.0	83.0	83.0	83.0	2.7	2.6	3.8	4.9	5.9	*	*	*	*	*
	20	20	32	47	56	83.0	83.0	83.0	83.0	83.0	2.4	2.5	3.7	4.8	5.9	*	*	*	*	*
	20	20	30	43	56	83.0	83.0	83.0	83.0	83.0	2.6	2.6	3.8	4.9	5.9	*	*	*	*	*
	20	20	30	42	55	83.0	83.0	83.0	83.0	83.0	2.7	2.6	3.8	4.9	5.9	*	*	*	*	*
110	20	20	32	47	56	83.0	83.0	83.0	83.0	83.0	1.5	1.6	2.3	3.0	3.7	*	*	*	*	*
	20	20	30	43	56	83.0	83.0	83.0	83.0	83.0	1.6	1.6	2.4	3.1	3.7	*	*	*	*	*
	20	20	30	42	55	83.0	83.0	83.0	83.0	83.0	1.7	1.6	2.4	3.1	3.7	*	*	*	*	*
	20	20	32	47	56	83.0	83.0	83.0	83.0	83.0	1.5	1.6	2.3	3.0	3.7	*	*	*	*	*
	20	20	30	43	56	83.0	83.0	83.0	83.0	83.0	1.6	1.6	2.4	3.1	3.7	*	*	*	*	*
	20	20	30	42	55	83.0	83.0	83.0	83.0	83.0	1.7	1.6	2.4	3.1	3.7	*	*	*	*	*
120	20	20	32	47	56	83.0	83.0	83.0	83.0	83.0	1.1	1.1	1.7	2.2	2.7	*	*	*	*	*
	20	20	30	43	56	83.0	83.0	83.0	83.0	83.0	1.2	1.2	1.7	2.2	2.7	*	*	*	*	*
	20	20	30	42	55	83.0	83.0	83.0	83.0	83.0	1.2	1.2	1.7	2.2	2.7	*	*	*	*	*
	20	20	32	47	56	83.0	83.0	83.0	83.0	83.0	1.1	1.1	1.7	2.2	2.7	*	*	*	*	*
	20	20	30	43	56	83.0	83.0	83.0	83.0	83.0	1.2	1.2	1.7	2.2	2.7	*	*	*	*	*
	20	20	30	42	55	83.0	83.0	83.0	83.0	83.0	1.2	1.2	1.7	2.2	2.7	*	*	*	*	*

* pressure drop is less than 1 ft
Interpolation is permissable, extrapolation is not.
Performance data in shaded area will be reduced for operating voltages below 240 vac.

Above performance is based on 70°F db entering air condition.
Above data is based on 15% methanol.
Table does not include fan or pump power corerctions for AHRI/ISO conditions.

Table 14b: Performance Data — Trilogy® VE 1860 - Cooling

EWT °F	DT	CFM/T	TC					SC					S/T					kW					HR				
			Compressor Speed %					Compressor Speed %					Compressor Speed %					Compressor Speed %					Compressor Speed %				
			30	40	60	80	100	30	40	60	80	100	30	40	60	80	100	30	40	60	80	100	30	40	60	80	100
20	45	300	18.0	24.0	36.0	48.0	60.0	11.3	15.5	23.0	30.1	37.8	0.63	0.65	0.64	0.63	0.63	0.26	0.40	0.81	1.38	2.10	18.9	25.4	38.8	52.7	67.2
	45	400	19.8	24.0	36.0	48.0	60.0	13.9	17.2	26.1	34.2	41.5	0.71	0.72	0.72	0.71	0.69	0.23	0.35	0.77	1.34	2.17	20.5	25.2	38.6	52.6	67.4
	45	500	20.1	24.0	36.0	48.0	60.0	15.7	18.4	28.3	37.9	44.1	0.78	0.77	0.78	0.79	0.74	0.27	0.29	0.83	1.77	2.70	21.0	25.0	38.8	54.0	69.2
30	40	300	18.0	24.0	36.0	48.0	60.0	11.2	15.3	22.8	30.0	37.7	0.62	0.64	0.63	0.62	0.63	0.41	0.54	0.95	1.57	2.36	19.4	25.8	39.3	53.3	68.0
	40	400	19.1	24.0	36.0	48.0	60.0	13.6	17.3	26.1	34.3	41.7	0.71	0.72	0.73	0.71	0.70	0.36	0.49	0.90	1.50	2.39	20.3	25.7	39.1	53.1	68.1
	40	500	20.1	24.0	36.0	48.0	60.0	16.0	18.8	28.7	38.5	45.0	0.80	0.78	0.80	0.80	0.75	0.35	0.36	0.91	1.89	2.87	21.2	25.2	39.1	54.4	69.8
	35	300	18.0	24.0	36.0	48.0	60.0	11.3	15.5	23.0	30.1	37.8	0.63	0.65	0.64	0.63	0.63	0.26	0.40	0.81	1.38	2.10	18.9	25.4	38.8	52.7	67.2
	35	400	19.8	24.0	36.0	48.0	60.0	13.9	17.2	26.1	34.2	41.5	0.71	0.72	0.72	0.71	0.69	0.23	0.35	0.77	1.34	2.17	20.5	25.2	38.6	52.6	67.4
	35	500	20.1	24.0	36.0	48.0	60.0	15.7	18.4	28.3	37.9	44.1	0.78	0.77	0.78	0.79	0.74	0.27	0.29	0.83	1.77	2.70	21.0	25.0	38.8	54.0	69.2
40	30	300	18.0	24.0	36.0	48.0	60.0	11.2	15.3	22.8	30.0	37.7	0.62	0.64	0.63	0.62	0.63	0.41	0.54	0.95	1.57	2.36	19.4	25.8	39.3	53.3	68.0
	30	400	19.1	24.0	36.0	48.0	60.0	13.6	17.3	26.1	34.3	41.7	0.71	0.72	0.73	0.71	0.70	0.36	0.49	0.90	1.50	2.39	20.3	25.7	39.1	53.1	68.1
	30	500	20.1	24.0	36.0	48.0	60.0	16.0	18.8	28.7	38.5	45.0	0.80	0.78	0.80	0.80	0.75	0.35	0.36	0.91	1.89	2.87	21.2	25.2	39.1	54.4	69.8
	25	300	18.0	24.0	36.0	48.0	60.0	11.3	15.5	23.0	30.1	37.8	0.63	0.65	0.64	0.63	0.63	0.26	0.40	0.81	1.38	2.10	18.9	25.4	38.8	52.7	67.2
	25	400	19.8	24.0	36.0	48.0	60.0	13.9	17.2	26.1	34.2	41.5	0.71	0.72	0.72	0.71	0.69	0.23	0.35	0.77	1.34	2.17	20.5	25.2	38.6	52.6	67.4
	25	500	20.1	24.0	36.0	48.0	60.0	15.7	18.4	28.3	37.9	44.1	0.78	0.77	0.78	0.79	0.74	0.27	0.29	0.83	1.77	2.70	21.0	25.0	38.8	54.0	69.2
50	20	300	18.0	24.0	36.0	48.0	60.0	11.2	15.3	22.8	30.0	37.7	0.62	0.64	0.63	0.62	0.63	0.41	0.54	0.95	1.57	2.36	19.4	25.8	39.3	53.3	68.0
	20	400	19.1	24.0	36.0	48.0	60.0	13.6	17.3	26.1	34.3	41.7	0.71	0.72	0.73	0.71	0.70	0.36	0.49	0.90	1.50	2.39	20.3	25.7	39.1	53.1	68.1
	20	500	20.1	24.0	36.0	48.0	60.0	16.0	18.8	28.7	38.5	45.0	0.80	0.78	0.80	0.80	0.75	0.35	0.36	0.91	1.89	2.87	21.2	25.2	39.1	54.4	69.8
	15	300	18.0	24.0	36.0	48.0	60.0	11.3	15.5	23.0	30.1	37.8	0.63	0.65	0.64	0.63	0.63	0.26	0.40	0.81	1.38	2.10	18.9	25.4	38.8	52.7	67.2
	15	400	19.8	24.0	36.0	48.0	60.0	13.9	17.2	26.1	34.2	41.5	0.71	0.72	0.72	0.71	0.69	0.23	0.35	0.77	1.34	2.17	20.5	25.2	38.6	52.6	67.4
	15	500	20.1	24.0	36.0	48.0	60.0	15.7	18.4	28.3	37.9	44.1	0.78	0.77	0.78	0.79	0.74	0.27	0.29	0.83	1.77	2.70	21.0	25.0	38.8	54.0	69.2
60	20	300	18.0	24.0	36.0	48.0	60.0	11.1	15.2	22.6	29.8	37.6	0.62	0.63	0.63	0.62	0.63	0.62	0.76	1.26	2.02	3.02	20.1	26.6	40.3	54.9	70.3
	20	400	18.0	24.0	36.0	48.0	60.0	12.8	17.3	26.0	34.3	41.9	0.71	0.72	0.72	0.71	0.70	0.55	0.72	1.18	1.89	2.93	19.9	26.5	40.0	54.4	70.0
	20	500	19.3	24.0	36.0	48.0	60.0	15.6	18.9	29.0	39.2	46.1	0.81	0.79	0.81	0.82	0.77	0.51	0.53	1.13	2.22	3.38	21.0	25.8	39.9	55.6	71.5
	10	300	18.0	24.0	36.0	48.0	60.0	11.2	15.3	22.8	30.0	37.7	0.62	0.64	0.63	0.62	0.63	0.41	0.54	0.95	1.57	2.36	19.4	25.8	39.3	53.3	68.0
	10	400	19.1	24.0	36.0	48.0	60.0	13.6	17.3	26.1	34.3	41.7	0.71	0.72	0.73	0.71	0.70	0.36	0.49	0.90	1.50	2.39	20.3	25.7	39.1	53.1	68.1
	10	500	20.1	24.0	36.0	48.0	60.0	16.0	18.8	28.7	38.5	45.0	0.80	0.78	0.80	0.80	0.75	0.35	0.36	0.91	1.89	2.87	21.2	25.2	39.1	54.4	69.8
70	20	300	18.0	24.0	36.0	48.0	60.0	11.1	15.2	22.6	29.7	37.7	0.62	0.63	0.63	0.62	0.63	0.78	0.98	1.64	2.63	3.94	20.7	27.4	41.6	57.0	73.4
	20	400	18.0	24.0	36.0	48.0	60.0	12.8	17.2	25.8	34.1	42.0	0.71	0.72	0.72	0.71	0.70	0.71	0.93	1.51	2.40	3.68	20.4	27.2	41.2	56.2	72.6
	20	500	18.0	24.0	36.0	48.0	60.0	14.5	18.6	28.7	39.1	46.3	0.81	0.77	0.80	0.81	0.77	0.69	0.72	1.45	2.72	4.10	20.3	26.5	41.0	57.3	74.0
	10	300	18.0	24.0	36.0	48.0	60.0	11.1	15.2	22.6	29.8	37.6	0.62	0.63	0.63	0.62	0.63	0.62	0.76	1.26	2.02	3.02	20.1	26.6	40.3	54.9	70.3
	10	400	18.0	24.0	36.0	48.0	60.0	12.8	17.3	26.0	34.3	41.9	0.71	0.72	0.72	0.71	0.70	0.55	0.72	1.18	1.89	2.93	19.9	26.5	40.0	54.4	70.0
	10	500	19.3	24.0	36.0	48.0	60.0	15.6	18.9	29.0	39.2	46.1	0.81	0.79	0.81	0.82	0.77	0.51	0.53	1.13	2.22	3.38	21.0	25.8	39.9	55.6	71.5
80	20	300	18.0	24.0	36.0	48.0	60.0	11.2	15.2	22.6	29.9	38.0	0.62	0.63	0.63	0.62	0.63	0.96	1.25	2.16	3.46	5.15	21.3	28.3	43.4	59.8	77.6
	20	400	18.0	24.0	36.0	48.0	60.0	12.8	17.0	25.5	33.8	41.9	0.71	0.71	0.71	0.70	0.70	0.87	1.16	1.95	3.09	4.68	21.0	28.0	42.6	58.5	76.0
	20	500	18.0	24.0	36.0	48.0	60.0	14.1	18.0	28.1	38.5	46.1	0.78	0.75	0.78	0.80	0.77	0.87	0.98	1.90	3.40	5.08	21.0	27.3	42.5	59.6	77.3
	10	300	18.0	24.0	36.0	48.0	60.0	11.1	15.2	22.6	29.7	37.7	0.62	0.63	0.63	0.62	0.63	0.78	0.98	1.64	2.63	3.94	20.7	27.4	41.6	57.0	73.4
	10	400	18.0	24.0	36.0	48.0	60.0	12.8	17.2	25.8	34.1	42.0	0.71	0.72	0.72	0.71	0.70	0.71	0.93	1.51	2.40	3.68	20.4	27.2	41.2	56.2	72.6
	10	500	18.0	24.0	36.0	48.0	60.0	14.5	18.6	28.7	39.1	46.3	0.81	0.77	0.80	0.81	0.77	0.69	0.72	1.45	2.72	4.10	20.3	26.5	41.0	57.3	74.0
90	20	300	18.0	24.0	36.0	48.0	60.0	11.3	15.3	22.7	30.1	38.4	0.63	0.64	0.63	0.63	0.64	1.19	1.63	2.86	4.57	6.72	22.1	29.5	45.8	63.6	82.9
	20	400	18.0	24.0	36.0	48.0	60.0	12.8	16.9	25.2	33.5	41.7	0.71	0.70	0.70	0.70	0.70	1.07	1.48	2.54	4.00	5.97	21.6	29.0	44.7	61.7	80.4
	20	500	18.0	24.0	36.0	48.0	60.0	13.7	17.6	27.5	37.9	45.6	0.76	0.73	0.76	0.79	0.76	1.10	1.31	2.48	4.28	6.31	21.8	28.5	44.5	62.6	81.5
	10	300	18.0	24.0	36.0	48.0	60.0	11.2	15.2	22.6	29.9	38.0	0.62	0.63	0.63	0.62	0.63	0.96	1.25	2.16	3.46	5.15	21.3	28.3	43.4	59.8	77.6
	10	400	18.0	24.0	36.0	48.0	60.0	12.8	17.0	25.5	33.8	41.9	0.71	0.71	0.71	0.70	0.70	0.87	1.16	1.95	3.09	4.68	21.0	28.0	42.6	58.5	76.0
	10	500	18.0	24.0	36.0	48.0	60.0	14.1	18.0	28.1	38.5	46.1	0.78	0.75	0.78	0.80	0.77	0.87	0.98	1.90	3.40	5.08	21.0	27.3	42.5	59.6	77.3
100	20	300	18.0	24.0	36.0	48.0	56.8	11.4	15.4	22.9	30.5	36.6	0.63	0.64	0.64	0.63	0.64	1.53	2.15	3.81	5.99	7.94	23.2	31.3	49.0	68.5	83.9
	20	400	18.0	24.0	36.0	48.0	60.0	12.9	16.9	25.0	33.3	41.7	0.72	0.70	0.69	0.69	0.69	1.37	1.93	3.33	5.20	7.63	22.7	30.6	47.4	65.7	86.0
	20	500	18.0	24.0	36.0	48.0	60.0	13.9	17.5	27.2	37.5	45.2	0.77	0.73	0.76	0.78	0.75	1.40	1.75	3.22	5.39	7.84	22.8	30.0	47.0	66.4	86.7
	10	300	18.0	24.0	36.0	48.0	60.0	11.3	15.3	22.7	30.1	38.4	0.63	0.64	0.63	0.63	0.64	1.19	1.63	2.86	4.57	6.72	22.1	29.5	45.8	63.6	82.9
	10	400	18.0	24.0	36.0	48.0	60.0	12.8	16.9	25.2	33.5	41.7	0.71	0.70	0.70	0.70	0.70	1.07	1.48	2.54	4.00	5.97	21.6	29.0	44.7	61.7	80.4
	10	500	18.0	24.0	36.0	48.0	60.0	13.7	17.6	27.5	37.9	45.6	0.76	0.73	0.76	0.79	0.76	1.10	1.31	2.48	4.28	6.31	21.8	28.5	44.5	62.6	81.5
110	20	300	18.0	24.0	36.0	44.5	44.5	11.4	15.5	23.1	28.5	28.5	0.63	0.64	0.64	0.64	0.64	2.0	2.9	5.0	6.9	6.9	25.0	33.9	53.2	68.2	68.2
	20	400	18.0	24.0	36.0	48.0	50.5	13.3	17.1	25.0	33.3	35.1	0.74	0.71	0.70	0.69	0.69	1.8	2.6	4.4	6.7	7.3	24.2	32.8	51.0	71.0	75.4
	20	500	18.0	24.0	36.0	48.0	52.0	14.8	18.2	27.5	37.6	40.6	0.82	0.76	0.76	0.78	0.78	1.8	2.3	4.2	6.7	7.7	24.1	31.9	50.2	71.0	78.3
	10	300	18.0	24.0	36.0	48.0	56.8	11.4	15.4	22.9	30.5	36.6	0.63	0.64	0.64	0.63	0.64	1.5	2.2	3.8	6.0	7.9	23.2	31.3	49.0	68.5	83.9
	10	400	18.0	24.0	36.0	48.0	60.0	12.9	16.9	25.0	33.3	41.7	0.72	0.70	0.69	0.69	0.69	1.4	1.9	3.3	5.2	7.6	22.7	30.6	47.4	65.7	86.0
	10	500	18.0	24.0	36.0	48.0	60.0	13.9	17.5	27.2	37.5	45.2	0.77	0.73	0.76	0.78	0.75	1.4	1.7	3.2	5.4	7.8	22.8	30.0	47.0	66.4	86.7
120	20	300	18.0	24.0	36.0	37.0	37.0	11.4	15.5	23.2	23.9	23.9	0.63	0.65	0.65	0.65	0.65	2.8	3.9	6.6	6.9	6.9	27.5	37.3	58.6	60.5	60.5
	20	400	18.0	24.0	36.0	42.5	42.5	13.9	17.6	25.3	29.7	29.7	0.77	0.73	0.70	0.70	0.70	2.5	3.4	5.8	7.2	7.2	26.4	35.7	55.6	67.2	67.2
	20	500	18.0	24.0	36.0	45.5	45.5	16.7	19.8	28.7	36.5	36.5	0.93	0.83	0.80	0.80	0.80	2.3	3.0	5.3	7.7	7.7	25.8	34.2	54.0	71.7	71.7
	10	300	18.0	24.0	36.0	44.5	44.5	11.4	15.5	23.1	28.5	28.5	0.63	0.64	0.64	0.64	0.64	2.0	2.9	5.0	6.9	6.9	25.0	33.9	53.2	68.2	68.2
	10	400	18.0	24.0	36.0	48.0	50.5	13.3	17.1	25.0	33.3	35.1	0.74	0.71	0.70	0.69	0.69	1.8	2.6	4.4	6.7	7.3	24.2	32.8	51.0	71.0	75.4
	10	500	18.0	24.0	36.0	48.0	52.0	14.8	18.2	27.5	37.6	40.6	0.82	0.76	0.76	0.78	0.78	1.8	2.3	4.2	6.7	7.7	24.1	31.9	50.2	71.0	78.3

* pressure drop is less than 1 ft
Interpolation is permissable, extrapolation is not.
Performance data in shaded area will be reduced for operating voltages below 240 vac.

Above performance is based on 80°F db / 67°F wb entering air conditions.
Above data is based on 15% methanol.
Table does not include fan or pump power corerctions for AHRI/ISO conditions.

Performance Data — Trilogy® VE 1860 - Cooling

EWT °F	EER					Hz					LWT(°F)					GPM					WPD(ft. of hd)				
	Compressor Speed %					Compressor Speed %					Compressor Speed %					Compressor Speed %					Compressor Speed %				
	30	40	60	80	100	30	40	60	80	100	30	40	60	80	100	30	40	60	80	100	30	40	60	80	100
20	68.1	59.4	44.2	34.7	28.6	20	25	39	56	71	65.0	65.0	65.0	65.0	65.0	0.8	1.1	1.7	2.3	3.0	*	*	*	*	*
	86.6	67.8	46.9	35.8	27.6	20	24	37	51	67	65.0	65.0	65.0	65.0	65.0	0.9	1.1	1.7	2.3	3.0	*	*	*	*	*
	73.9	82.5	43.3	27.1	22.2	20	24	37	52	69	65.0	65.0	65.0	65.0	65.0	0.9	1.1	1.7	2.4	3.1	*	*	*	*	*
30	44.4	44.8	37.8	30.7	25.5	21	26	41	58	73	70.0	70.0	70.0	70.0	70.0	1.0	1.3	2.0	2.7	3.4	*	*	*	*	*
	53.7	48.8	39.8	31.9	25.1	20	25	38	52	68	70.0	70.0	70.0	70.0	70.0	1.0	1.3	2.0	2.7	3.4	*	*	*	*	*
	57.6	65.9	39.5	25.5	20.9	20	24	37	51	69	70.0	70.0	70.0	70.0	70.0	1.1	1.3	2.0	2.7	3.5	*	*	*	*	*
	68.1	59.4	44.2	34.7	28.6	20	25	39	56	71	65.0	65.0	65.0	65.0	65.0	1.1	1.5	2.2	3.0	3.8	*	*	*	*	*
	86.6	67.8	46.9	35.8	27.6	20	24	37	51	67	65.0	65.0	65.0	65.0	65.0	1.2	1.4	2.2	3.0	3.9	*	*	*	*	*
	73.9	82.5	43.3	27.1	22.2	20	24	37	52	69	65.0	65.0	65.0	65.0	65.0	1.2	1.4	2.2	3.1	4.0	*	*	*	*	*
40	44.4	44.8	37.8	30.7	25.5	21	26	41	58	73	70.0	70.0	70.0	70.0	70.0	1.3	1.7	2.6	3.6	4.5	*	*	*	*	*
	53.7	48.8	39.8	31.9	25.1	20	25	38	52	68	70.0	70.0	70.0	70.0	70.0	1.4	1.7	2.6	3.5	4.5	*	*	*	*	*
	57.6	65.9	39.5	25.5	20.9	20	24	37	51	69	70.0	70.0	70.0	70.0	70.0	1.4	1.7	2.6	3.6	4.7	*	*	*	*	*
	68.1	59.4	44.2	34.7	28.6	20	25	39	56	71	65.0	65.0	65.0	65.0	65.0	1.5	2.0	3.1	4.2	5.4	*	*	*	*	*
	86.6	67.8	46.9	35.8	27.6	20	24	37	51	67	65.0	65.0	65.0	65.0	65.0	1.6	2.0	3.1	4.2	5.4	*	*	*	*	*
	73.9	82.5	43.3	27.1	22.2	20	24	37	52	69	65.0	65.0	65.0	65.0	65.0	1.7	2.0	3.1	4.3	5.5	*	*	*	*	*
50	44.4	44.8	37.8	30.7	25.5	21	26	41	58	73	70.0	70.0	70.0	70.0	70.0	1.9	2.6	3.9	5.3	6.8	*	*	*	*	1.4
	53.7	48.8	39.8	31.9	25.1	20	25	38	52	68	70.0	70.0	70.0	70.0	70.0	2.0	2.6	3.9	5.3	6.8	*	*	*	*	1.4
	57.6	65.9	39.5	25.5	20.9	20	24	37	51	69	70.0	70.0	70.0	70.0	70.0	2.1	2.5	3.9	5.4	7.0	*	*	*	*	1.5
	68.1	59.4	44.2	34.7	28.6	20	25	39	56	71	65.0	65.0	65.0	65.0	65.0	2.5	3.4	5.2	7.0	9.0	*	*	*	1.5	3.2
	86.6	67.8	46.9	35.8	27.6	20	24	37	51	67	65.0	65.0	65.0	65.0	65.0	2.7	3.4	5.1	7.0	9.0	*	*	*	1.5	3.2
	73.9	82.5	43.3	27.1	22.2	20	24	37	52	69	65.0	65.0	65.0	65.0	65.0	2.8	3.3	5.2	7.2	9.2	*	*	*	1.7	3.5
60	29.1	31.5	28.6	23.8	19.8	22	28	43	62	79	80.0	80.0	80.0	80.0	80.0	2.0	2.7	4.0	5.5	7.0	*	*	*	*	1.5
	32.8	33.3	30.4	25.4	20.4	20	26	40	55	72	80.0	80.0	80.0	80.0	80.0	2.0	2.6	4.0	5.4	7.0	*	*	*	*	1.5
	37.8	45.7	31.8	21.6	17.8	20	25	38	53	71	80.0	80.0	80.0	80.0	80.0	2.1	2.6	4.0	5.6	7.2	*	*	*	*	1.6
	44.4	44.8	37.8	30.7	25.5	21	26	41	58	73	70.0	70.0	70.0	70.0	70.0	3.9	5.2	7.9	10.7	13.6	*	*	2.2	5.2	10.0
	53.7	48.8	39.8	31.9	25.1	20	25	38	52	68	70.0	70.0	70.0	70.0	70.0	4.1	5.1	7.8	10.6	13.6	*	*	2.1	5.2	10.0
	57.6	65.9	39.5	25.5	20.9	20	24	37	51	69	70.0	70.0	70.0	70.0	70.0	4.2	5.0	7.8	10.9	14.0	*	*	2.1	5.5	10.7
70	23.0	24.4	21.9	18.2	15.2	23	30	47	68	87	90.0	90.0	90.0	90.0	90.0	2.1	2.7	4.2	5.7	7.3	*	*	*	*	1.7
	25.3	25.9	23.8	20.0	16.3	22	28	43	59	78	90.0	90.0	90.0	90.0	90.0	2.0	2.7	4.1	5.6	7.3	*	*	*	*	1.7
	26.2	33.2	24.7	17.6	14.6	20	26	40	57	77	90.0	90.0	90.0	90.0	90.0	2.0	2.6	4.1	5.7	7.4	*	*	*	*	1.8
	29.1	31.5	28.6	23.8	19.8	22	28	43	62	79	80.0	80.0	80.0	80.0	80.0	4.0	5.3	8.1	11.0	14.1	*	*	2.3	5.5	10.7
	32.8	33.3	30.4	25.4	20.4	20	26	40	55	72	80.0	80.0	80.0	80.0	80.0	4.0	5.3	8.0	10.9	14.0	*	*	2.3	5.4	10.6
	37.8	45.7	31.8	21.6	17.8	20	25	38	53	71	80.0	80.0	80.0	80.0	80.0	4.2	5.2	8.0	11.1	14.3	*	*	2.2	5.7	11.2
80	18.8	19.2	16.7	13.9	11.6	25	33	52	75	98	100.0	100.0	100.0	100.0	100.0	2.1	2.8	4.3	6.0	7.8	*	*	*	*	2.0
	20.7	20.7	18.5	15.5	12.8	23	31	47	66	87	100.0	100.0	100.0	100.0	100.0	2.1	2.8	4.3	5.9	7.6	*	*	*	*	1.9
	20.7	24.5	19.0	14.1	11.8	22	29	45	63	85	100.0	100.0	100.0	100.0	100.0	2.1	2.7	4.2	6.0	7.7	*	*	*	*	2.0
	23.0	24.4	21.9	18.2	15.2	23	30	47	68	87	90.0	90.0	90.0	90.0	90.0	4.1	5.5	8.3	11.4	14.7	*	*	2.5	6.0	11.7
	25.3	25.9	23.8	20.0	16.3	22	28	43	59	78	90.0	90.0	90.0	90.0	90.0	4.1	5.4	8.2	11.2	14.5	*	*	2.4	5.8	11.4
	26.2	33.2	24.7	17.6	14.6	20	26	40	57	77	90.0	90.0	90.0	90.0	90.0	4.1	5.3	8.2	11.5	14.8	*	*	2.4	6.1	12.0
90	15.2	14.8	12.6	10.5	8.9	28	37	59	85	111	110.0	110.0	110.0	110.0	110.0	2.2	3.0	4.6	6.4	8.3	*	*	*	1.1	2.4
	16.8	16.2	14.2	12.0	10.0	25	34	53	74	99	110.0	110.0	110.0	110.0	110.0	2.2	2.9	4.5	6.2	8.0	*	*	*	1.0	2.2
	16.4	18.3	14.5	11.2	9.5	25	33	51	72	96	110.0	110.0	110.0	110.0	110.0	2.2	2.8	4.4	6.3	8.2	*	*	*	1.0	2.3
	18.8	19.2	16.7	13.9	11.6	25	33	52	75	98	100.0	100.0	100.0	100.0	100.0	4.3	5.7	8.7	12.0	15.5	*	*	2.8	6.8	13.3
	20.7	20.7	18.5	15.5	12.8	23	31	47	66	87	100.0	100.0	100.0	100.0	100.0	4.2	5.6	8.5	11.7	15.2	*	*	2.7	6.4	12.6
	20.7	24.5	19.0	14.1	11.8	22	29	45	63	85	100.0	100.0	100.0	100.0	100.0	4.2	5.5	8.5	11.9	15.5	*	*	2.6	6.7	13.1
100	11.7	11.1	9.5	8.0	7.2	31	42	68	98	120	120.0	120.0	120.0	120.0	120.0	2.3	3.1	4.9	6.8	8.4	*	*	*	1.3	2.4
	13.2	12.4	10.8	9.2	7.9	28	38	60	85	113	120.0	120.0	120.0	120.0	120.0	2.3	3.1	4.7	6.6	8.6	*	*	*	1.2	2.6
	12.9	13.7	11.2	8.9	7.7	27	37	57	82	110	120.0	120.0	120.0	120.0	120.0	2.3	3.0	4.7	6.6	8.7	*	*	*	1.2	2.7
	15.2	14.8	12.6	10.5	8.9	28	37	59	85	111	110.0	110.0	110.0	110.0	110.0	4.4	5.9	9.2	12.7	16.6	*	*	3.2	7.8	15.4
	16.8	16.2	14.2	12.0	10.0	25	34	53	74	99	110.0	110.0	110.0	110.0	110.0	4.3	5.8	8.9	12.3	16.1	*	*	3.0	7.2	14.3
	16.4	18.3	14.5	11.2	9.5	25	33	51	72	96	110.0	110.0	110.0	110.0	110.0	4.4	5.7	8.9	12.5	16.3	*	*	2.9	7.5	14.8
110	8.8	8.3	7.1	6.4	6.4	36	48	79	103	103	130.0	130.0	130.0	130.0	130.0	2.5	3.4	5.3	6.8	6.8	0.1	0.1	0.5	1.2	1.2
	9.9	9.4	8.2	7.1	6.9	32	44	70	98	105	130.0	130.0	130.0	130.0	130.0	2.4	3.3	5.1	7.1	7.5	0.1	0.1	0.4	1.4	1.7
	10.1	10.4	8.7	7.1	6.7	30	41	65	93	104	130.0	130.0	130.0	130.0	130.0	2.4	3.2	5.0	7.1	7.8	0.1	0.1	0.4	1.4	1.9
	11.7	11.1	9.5	8.0	7.2	31	42	68	98	120	120.0	120.0	120.0	120.0	120.0	4.6	6.3	9.8	13.7	16.8	0.4	1.0	3.8	9.4	15.7
	13.2	12.4	10.8	9.2	7.9	28	38	60	85	113	120.0	120.0	120.0	120.0	120.0	4.5	6.1	9.5	13.1	17.2	0.4	0.9	3.5	8.4	16.6
	12.9	13.7	11.2	8.9	7.7	27	37	57	82	110	120.0	120.0	120.0	120.0	120.0	4.6	6.0	9.4	13.3	17.3	0.4	0.9	3.4	8.7	17.0
120	6.5	6.2	5.4	5.4	5.4	42	57	92	95	95	140.0	140.0	140.0	140.0	140.0	2.7	3.7	5.9	6.1	6.1	0.0	0.0	0.6	0.7	0.7
	7.3	7.0	6.3	5.9	5.9	36	50	81	98	98	140.0	140.0	140.0	140.0	140.0	2.6	3.6	5.6	6.7	6.7	0.0	0.0	0.5	1.1	1.1
	7.9	8.0	6.8	5.9	5.9	33	46	74	100	100	140.0	140.0	140.0	140.0	140.0	2.6	3.4	5.4	7.2	7.2	0.0	0.0	0.4	1.4	1.4
	8.8	8.3	7.1	6.4	6.4	36	48	79	103	103	130.0	130.0	130.0	130.0	130.0	5.0	6.8	10.6	13.6	13.6	0.4	1.2	4.7	9.1	9.1
	9.9	9.4	8.2	7.1	6.9	32	44	70	98	105	130.0	130.0	130.0	130.0	130.0	4.8	6.6	10.2	14.2	15.1	0.4	1.1	4.2	10.1	11.8
	10.1	10.4	8.7	7.1	6.7	30	41	65	93	104	130.0	130.0	130.0	130.0	130.0	4.8	6.4	10.0	14.2	15.7	0.4	1.0	4.0	10.1	13.0

* pressure drop is less than 1 ft
Interpolation is permissable, extrapolation is not.
Performance data in shaded area will be reduced for operating voltages below 240 vac.
Above performance is based on 80°F db / 67°F wb entering air conditions.
Above data is based on 15% methanol.
Table does not include fan or pump power corerctions for AHRI/ISO conditions.

Preventive Maintenance

WATER COIL MAINTENANCE
(All other water loop applications)
Generally water coil maintenance is not needed for closed loop systems. However, if the piping is known to have high dirt or debris content, it is best to establish a periodic maintenance schedule with the owner so the water coil can be checked regularly. Should periodic coil cleaning be necessary, use standard coil cleaning procedures, which are compatible with both the heat exchanger material and copper water lines. Generally, the more water flowing through the unit, the less chance for scaling. However, flow rates over 3 gpm per ton (3.9 l/m per kW) may produce water (or debris) velocities that can erode the heat exchanger wall and ultimately produce leaks.

FILTERS
Filters must be clean to obtain maximum performance. Filters should be inspected every month under normal operating conditions and be replaced when necessary. Units should never be operated without a filter.

Washable, high efficiency, electrostatic filters, when dirty, can exhibit a very high pressure drop for the fan motor and reduce air flow, resulting in poor performance. It is especially important to provide consistent washing of these filters (in the opposite direction of the normal air flow) once per month using a high pressure wash similar to those found at self-serve car washes.

CONDENSATE DRAIN
In areas where airborne bacteria may produce a “slimy” substance in the drain pan, it may be necessary to treat the drain pan chemically with an algaecide approximately every three months to minimize the problem. The condensate pan may also need to be cleaned periodically to insure indoor air quality. The condensate drain can pick up lint and dirt, especially with dirty filters. Inspect the drain twice a year to avoid the possibility of plugging and eventual overflow.

FAN MOTORS
All residential units have permanently lubricated fan motors. Further lubrication is not recommended.

AIR COIL
The air coil must be cleaned to obtain maximum performance. Check once a year under normal operating conditions and, if dirty, brush or vacuum clean. Care must be taken not to damage the aluminum fins while cleaning. CAUTION: Fin edges are sharp.

CABINET
Do not allow water to stay in contact with the cabinet for long periods of time to prevent corrosion of the cabinet sheet metal. Generally, vertical cabinets are set up from the floor a few inches [7 - 8 cm] to prevent water from entering the cabinet. The cabinet can be cleaned using a mild detergent.

REFRIGERANT SYSTEM
To maintain sealed circuit integrity, do not install service gauges unless unit operation appears abnormal. Reference the operating charts for pressures and temperatures. Verify that air and water flow rates are at proper levels before servicing the refrigerant circuit.

Troubleshooting

Sensor Inputs

All sensor inputs are 'paired wires' connecting each component to the board. Therefore, continuity on pressure switches, for example can be checked at the board connector. The thermistor resistance should be measured with the connector removed so that only the impedance of the thermistor is measured. If desired, this reading can be compared to the thermistor resistance chart shown in Table 15. An ice bath can be used to check the calibration of the thermistor.

Table 15: Nominal resistance at various temperatures

Temp (ºC)	Temp (ºF)	Resistance (kOhm)
-17.8	0.0	85.34
-17.5	0.5	84.00
-16.9	1.5	81.38
-12	10.4	61.70
-11	12.2	58.40
-10	14.0	55.30
-9	15.8	52.38
-8	17.6	49.64
-7	19.4	47.05
-6	21.2	44.61
-5	23.0	42.32
-4	24.8	40.15
-3	26.6	38.11
-2	28.4	36.18
-1	30.2	34.37
0	32.0	32.65
1	33.8	31.03
2	35.6	29.50
3	37.4	28.05
4	39.2	26.69
5	41.0	25.39
6	42.8	24.17
7	44.6	23.02
8	46.4	21.92
9	48.2	20.88
10	50.0	19.90
11	51.8	18.97
12	53.6	18.09
13	55.4	17.26
14	57.2	16.46
15	59.0	15.71
16	60.8	15.00
17	62.6	14.32
18	64.4	13.68
19	66.2	13.07
20	68.0	12.49
21	69.8	11.94
22	71.6	11.42
23	73.4	10.92
24	75.2	10.45
25	77.0	10.00
26	78.8	9.57
27	80.6	9.16
28	82.4	8.78
29	84.2	8.41
30	86.0	8.06
31	87.8	7.72
32	89.6	7.40
33	91.4	7.10
34	93.2	6.81
35	95.0	6.53
36	96.8	6.27
37	98.6	6.01
38	100.4	5.77
39	102.2	5.54
40	104.0	5.33
41	105.8	5.12
42	107.6	4.92
43	109.4	4.72
44	111.2	4.54
45	113.0	4.37
46	114.8	4.20
47	116.6	4.04
48	118.4	3.89
49	120.2	3.74
50	122.0	3.60
51	123.8	3.47
52	125.6	3.34
53	127.4	3.22
54	129.2	3.10
55	131.0	2.99
56	132.8	2.88
57	134.6	2.77
58	136.4	2.67
59	138.2	2.58
60	140.0	2.49
61	141.8	2.40
62	143.6	2.32
63	145.4	2.23
64	147.2	2.16
65	149.0	2.08
66	150.8	2.01
67	152.6	1.94
68	154.4	1.88
69	156.2	1.81
70	158.0	1.75
71	159.8	1.69
72	161.6	1.64
73	163.4	1.58
74	165.2	1.53
75	167.0	1.48
76	168.8	1.43
77	170.6	1.39
78	172.4	1.34
79	174.2	1.30
80	176.0	1.26
81	177.8	1.22
82	179.6	1.18
83	181.4	1.14
84	183.2	1.10
85	185.0	1.07
86	186.8	1.04
87	188.6	1.01
88	190.4	0.97
89	192.2	0.94
90	194.0	0.92
91	195.8	0.89
92	197.6	0.86
93	199.4	0.84
94	201.2	0.81
95	203.0	0.79
96	204.8	0.76
97	206.6	0.74
98	208.4	0.72
99	210.2	0.70
100	212.0	0.68
101	213.8	0.66
102	215.6	0.64
103	217.4	0.62
104	219.2	0.60
105	221.0	0.59
106	222.8	0.57
107	224.6	0.55
108	226.4	0.54
109	228.2	0.52
110	230.0	0.51
111	231.8	0.50
112	233.6	0.48
113	235.4	0.47
114	237.2	0.46
115	239.0	0.44
116	240.8	0.43
117	242.6	0.42
118	244.4	0.41
119	246.2	0.40
120	248.0	0.39
121	249.8	0.38
122	251.6	0.37
123	253.4	0.36

Table 16: Troubleshooting

Code	Fault	Mode	Possible Cause	Solution
2	**High Discharge Pressure**			
		CL	Reduced or no water flow	Check loop pump operation
		CL	Reduced or no water flow	Check water flow and adjust to proper flow rate
		CL	Water temp out of range	Bring water temp within design parameters
		HT	Reduced or no air flow	Check for dirty air filter - clean or replace
		HT	Reduced or no air flow	Check fan motor operation and air flow restrictions
		HT	Reduced or no air flow	Dirty air coil
		HT	Reduced or no air flow	External static is too high - correct duct work
		HT	Air temp out of range	Bring air temp within design parameters
		ALL	Overcharged	Check superheat and subcooling vs. manual mode operating condition table
		ALL	Faulty discharge transducer	Check transducer
3	**Low Suction Pressure**			
		ALL	Insufficient charge	Check for refrigerant leaks
		HT	Incorrect loop configuration	Check freeze protection trip point setting
		HT	Reduced or no water flow	Check loop pump operation
		HT	Reduced or no water flow	Check water flow and adjust to proper flow rate
		CL	Reduced or no air flow	Check for dirty air filter - clean or replace
		CL	Reduced or no air flow	Check fan motor operation and air flow restrictions
		CL	Reduced or no air flow	Dirty air coil
		CL	Reduced or no air flow	External static is too high - correct duct work
		HT	Improperly functioning EEV1	Check coil windings with ohmmeter. WHITE/RED, GREEN/RED, YELLOW/VIOLET, and BLUE/VIOLET should each read between 36 and 44 ohms.
		HT	Improperly functioning EEV1	Check output signal from EXM.
		CL	Improperly functioning EEV2	Check coil windings with ohmmeter. WHITE/RED, GREEN/RED, YELLOW/VIOLET, and BLUE/VIOLET should each read between 36 and 44 ohms.
		CL	Improperly functioning EEV2	Check output signal from EXM.
		HT	Water temp out of range	Bring water temp within design parameters
		CL	Air temp out of range	Bring air temp within design parameters
		ALL	Faulty suction transducer	Check transducer
		ALL	Faulty check valve	Check different operational modes to isolate valve
		ALL	Restriction after the EEV	Check for temperature drop at various sections along refrigerant circuit. i.e., across filter-dryer, etc.
6	**Condensate Overflow**			
		ALL	Blocked Drain	Check for blockage and clean drain.
		ALL	Improper Trap	Check trap dimensions and location ahead of vent
		CL	Poor drainage	Check for piping slope away from unit
		CL	Poor drainage	Check slope of unit towards outlet
		CL	Poor drainage	Poor venting - check vent location
		CL	Moisture on sensor	Check for moisture shorting to air coil
		ALL	Plugged air filter	Clean or replace air filter
		ALL	Restricted return air flow	Find and eliminate restriction - increaes return duct and/or grille size
7	**Over / Under Voltage**			
		ALL	Under voltage	Check power supply and 24Vac before and during operation
		ALL	Under voltage	Check power supply wires
		ALL	Under voltage	Check 24Vac transformer tap for correct power supply voltage
		ALL	Over voltage	Check power supply and 24Vac before and during operation
		ALL	Over voltage	Check 24Vac transformer tap for correct power supply voltage

Troubleshooting (Cont.)

Code	Fault	Mode	Possible Cause	Solution
10	**ECM Low RPM**			
		ALL	Blower does not operate	Check blower line voltage
		ALL	Blower does not operate	Check blower low voltage wiring
		ALL	Blower operating with incorrect airflow	Wrong unit size selected - check unit configuration
		ALL	Blower operating with incorrect airflow	Wrong unit family selected - check unit configuration
		ALL	Blower operating with incorrect airflow	Incorrect motor size
		ALL	Blower operating with incorrect airflow	Incorrect blower selection
11	**Low Air Coil Pressure**			
		CL	Low Return Air temp	Bring air temp within design parameters
		CL	Plugged air filter	Clean or replace air filter
		CL	Bad Suction Pressure Transducer	If supply voltage at BLK and GND wires reads 4.5-5.5 VDC but signal at GND and RED is not between 0.5-4.5 VDC, replace sensor
		CL	Insufficient charge	Check for refrigerant leaks
12	**Control Fault**			
		ANY	EXM not properly programmed	reprogram EXM using Service Tool
		ANY	Bad EXM	replace EXM
13	**Low Pump Flow**			
		ALL	Flat loop	Flush and repressurize loop.
		ALL	Air pocket	Flush and repressurize loop.
		ALL	System setup for single and not parallel pumping.	Change unit loop pump configuration.
		ALL	Pump Failure	Check pump.
		ALL	Bad Flow Sensor	Check flow sensor.
14	**High Discharge temp**			
		ALL	Insufficient charge	Check for refrigerant leaks
		HT	Water temp out of range	Bring water temp within design parameters
		CL	Air temp out of range	Bring air temp within design parameters
		ALL	Faulty EEV	Check EEV operation, superheat will be high as well
		ALL	Fouled heat exchanger	Clean appropiate coil
15	**Discharge Pressure Sensor**			
		ALL	Bad tranducer	If supply voltage at BLK and GND wires reads 4.5-5.5 VDC but signal at GND and RED is not between 0.5-4.5 VDC, replace sensor
		ALL	Bad wiring harness	Check harness
		ALL	Bad EXM	If supply voltage across BLK and GND doesn't read 4.5-5.5 VDC replace EXM
		ALL	Bad EXM	If voltage across GND and RED reads between 0.5-4.5 VDC but fault still exists, replace EXM
16	**Suction Pressure Sensor**			
		ALL	Bad tranducer	If supply voltage at BLK and GND wires reads 4.5-5.5 VDC but signal at GND and BLU is not between 0.5-4.5 VDC, replace sensor
		ALL	Bad wiring harness	Check harness
		ALL	Bad EXM	If supply voltage across BLK and GND doesn't read 4.5-5.5 VDC replace EXM
		ALL	Bad EXM	If voltage across GND and BLU reads between 0.5-4.5 VDC but fault still exists, replace EXM
17	**Space temp Sensor**			
		ALL	Bad thermostat	Check thermostat to ensure that it is operating
		ALL	Bad EXM	Use T-Stat service mode to check other temp values as well as space humidity. If not, replace EXM
		ALL	Bad wiring	Check wiring between the thermostat and EXM
		ALL	Incorrect master/slave setting	Check that DIP switch 1 is set to the ON position
18	**Space Humidity Sensor**			
		ALL	Bad thermostat	Check thermostat to ensure that it is operating
		ALL	Bad EXM	Use T-Stat service mode to check other temp values as well as space temp. If not, replace EXM
		ALL	Bad wiring	Check wiring between the thermostat and EXM
		ALL	Incorrect master/slave setting	Check that DIP switch 1 is set to the ON position

Troubleshooting

Code	Fault	Mode	Possible Cause	Solution
19	**Low Refrigerant Pressure Differential**			
		ALL	Stuck RV	Replace improperly functioning RV
		ALL	Bad compressor	Check compressor to ensure it is operating.
20	**ECM configuration fault (any)**			
		ALL	Incorrect unit configuration	Check unit size
		ALL	Incorrect motor size	Check motor size
21	**High Blower Static**			
		ALL	Plugged air filter	Clean or replace air filter
		ALL	Bad duct work	Correct duct work.
22	**Grundfos Flow Sensor**			
		ALL	Bad tranducer	If supply voltage across BRN and WHT wires reads 4.75-5.25 VDC but a signal is not present, replace sensor
		ALL	Bad wiring harness	Check harness
		ALL	Bad EXM	If supply voltage across BRN and WHT doesn't read 4.75-5.25 VDC replace EXM
23	**Grundfos Pressure Sensor**			
		ALL	Bad tranducer	If supply voltage across BRN and WHT wires reads 4.75-5.25 VDC but a signal is not present, replace sensor
		ALL	Bad wiring harness	Check harness
		ALL	Bad EXM	If supply voltage across BRN and WHT doesn't read 4.75-5.25 VDC replace EXM
24	**Leaving Air temp Sensor**			
		ALL	Bad thermistor	Check temp vs. resistance curve per calculator
		ALL	Bad wiring harness	Check wiring harness
		ALL	Bad EXM	If harness and sensor are fine, board is bad. Replace EXM
25	**High EWT Warning**			
		ALL	High EWT	Bring water temp within design parameters
26	**Low EWT Warning**			
		ALL	Low EWT	Bring water temp within design parameters
27	**Cabinet temp Sensor**			
		ALL	Bad thermistor	Check temp vs. resistance curve per calculator
		ALL	Bad wiring harness	Check wiring harness
		ALL	Bad EXM	If harness and sensor are fine, board is bad. Replace EXM
28	**No Loop Pump Feedback**			
		ALL	No line voltage	Check power cable or unit voltage
		ALL	Control signal cable	Check signal cable and verify that voltage is between 3-4 VDC with the pump OFF and between 0-2 VDC with the pump ON.
		ALL	Bad EXM	If a feedback signal is present but the EXM doesn't read it properly the board is damaged. Replace the EXM.
29	**Low Loop Pump Voltage**			
		ALL	Low pump voltage	Check line voltage to the pump and increase
30	**Loop Pump Locked Rotor**			
		ALL	contaminants or trash in the pump impeller	Remove the pump head, clean out contaminants and flush system
		ALL	Seized impeller	Replace pump.
31	**Loop Pump Voltage Shutdown**			
		ALL	Low pump voltage	Check line voltage to the pump
32	**Loop Pump Sensor**			
		ALL	Bad RPM sensor	Replace pump if the line voltage and control signal is present at the pump but it doesn't operate.
38	**Suction temp Sensor**			
		ALL	Bad thermistor	Check temp vs. resistance curve per calculator
		ALL	Bad wiring harness	Check wiring harness
		ALL	Bad EXM	If harness and sensor are fine board is bad, replace EXM
39	**Discharge temp Sensor**			
		ALL	Bad thermistor	Check temp vs. resistance curve per calculator
		ALL	Bad wiring harness	Check wiring harness
		ALL	Bad EXM	If harness and sensor are fine board is bad, replace EXM

Troubleshooting (Cont.)

Code	Fault	Mode	Possible Cause	Solution
42	**Air Coil Liquid temp Sensor**			
		ALL	Bad thermistor	Check temp vs. resistance curve per calculator
		ALL	Bad wiring harness	Check wiring harness
		ALL	Bad EXM	If harness and sensor are fine board is bad, replace EXM
43	**Air Coil Vapor temp Sensor**			
		ALL	Bad thermistor	Check temp vs. resistance curve per calculator
		ALL	Bad wiring harness	Check wiring harness
		ALL	Bad EXM	If harness and sensor are fine board is bad, replace EXM
44	**Water Coil Liquid temp Sensor**			
		ALL	Bad thermistor	Check temp vs. resistance curve per calculator
		ALL	Bad wiring harness	Check wiring harness
		ALL	Bad EXM	If harness and sensor are fine board is bad, replace EXM
45	**Water Coil Vapor temp Sensor**			
		ALL	Bad thermistor	Check temp vs. resistance curve per calculator
		ALL	Bad wiring harness	Check wiring harness
		ALL	Bad EXM	If harness and sensor are fine board is bad, replace EXM
47	**Spare temp 1 sensor fault**			
		ALL	Bad thermistor	Check temp vs. resistance curve per calculator
		ALL	Bad wiring harness	Check wiring harness
		ALL	Bad EXM	If harness and sensor are fine board is bad, replace EXM
51	**High Suction Pressure Warning**			
		ALL	Overcharged	Check superheat and subcooling vs. typical operating condition table
		ALL	Faulty discharge transducer	Check transducer
		CL	High EWT	Bring water temp within design parameters
		HT	High EAT	Bring air temp within design parameters
52	**Low Suction Pressure Warning**			
		HT	Low LWT	Bring water temp within design parameters
		ALL	Insufficient charge	Check for refrigerant leaks
		HT	Incorrect loop configuration	Check freeze protection trip point setting
		HT	Reduced or no water flow	Check loop pump operation
		HT	Reduced or no water flow	Check water flow and adjust to proper flow rate
		CL	Reduced or no air flow	Check for dirty air filter - clean or replace
		CL	Reduced or no air flow	Check fan motor operation and air flow restrictions
		CL	Reduced or no air flow	Dirty air coil
		CL	Reduced or no air flow	External static is too high - correct duct work
		HT	Improperly functioning EEV1	Check coil windings with ohmmeter. WHITE/RED, GREEN/RED, YELLOW/VIOLET, and BLUE/VIOLET should each read between 36 and 44 ohms.
		HT	Improperly functioning EEV1	Check output signal from EXM.
		CL	Improperly functioning EEV2	Check coil windings with ohmmeter. WHITE/RED, GREEN/RED, YELLOW/VIOLET, and BLUE/VIOLET should each read between 36 and 44 ohms.
		CL	Improperly functioning EEV2	Check output signal from EXM.
		HT	Water temp out of range	Bring water temp within design parameters
		CL	Air temp out of range	Bring air temp within design parameters
		ALL	Faulty suction transducer	Check transducer
		ALL	Faulty check valve	Check different operational modes to isolate valve
		ALL	Restriction after the EEV	Check for temperature drop at various sections along refrigerant circuit. i.e., across filter-dryer, etc.
53	**Low Discharge Pressure Warning**			
		CL	Low EWT	Bring water temp within design parameters
		HT	Low EAT	Bring air temp within design parameters
57	**Low Discharge Superheat**			
		ALL	Faulty EEV	Check EEV operation
		ALL	Bad discharge pressure transducer	Troubleshoot transducer
		ALL	Bad discharge temp sensor	Check temp vs. resistance curve per calculator
		ALL	Improperly installed discharge temp sensor	Check location and position of temp sensor

Troubleshooting

Code	Fault	Mode	Possible Cause	Solution
58	**Low Suction Superheat**			
		ALL	Faulty EEV	Check EEV operation
		ALL	Bad suction pressure transducer	Troubleshoot transducer
		ALL	Bad suction temp sensor	Check temp vs. resistance curve per calculator
		ALL	Improperly installed suction temp sensor	Check location and position of temp sensor
59	**High Suction Superheat**			
		ALL	Faulty EEV	Check EEV operation
		ALL	Low charge	Check unit capacity in mode check
		ALL	Bad suction pressure transducer	Troubleshoot transducer
		ALL	Bad suction temp sensor	Check temp vs. resistance curve per calculator
		ALL	Improperly installed suction temp sensor	Check location and position of temp sensor
60	**General Compressor Fault**			
		Mitsubishi Inverter 0930		
		HT, CL	Check compressor sub faults	See Low Level sub-faults (codes 61-71, 75 and 76).
		Carel Inverter 1860		
		HT, CL	Data reception failure	Check the serial connection. Switch the drive off and back on again. In case of persistance, call for assistance.
		HT, CL	Execution of reset parameter default command; Parameters user setting corrupted	Set parameters.
		HT, CL	Wrong parameters values or unsuited load	Switch the drive off and back on again. Check the parameters values. Check the motor load.
		HT, CL	Refer to class A alarm 13	refer to class A alarm 13
61	**High temp Shutdown**			
		Mitsubishi Inverter 0930		
		HT, CL	Improper contact with heat sink	Check heat sink contact with inverter board.
		HT, CL	Damaged thermistor	Replace inverter board if reading coming back from board is higher than 200ºF ***WARNING - Inverter board capacitors maintain high voltage for up to 15 minutes before fully discharging.
		Carel Inverter 1860		
		HT, CL	The temperature inside the drive has exceeded the maximum level allowed.	Check that the quantity and flow of cooling air ar regular. Check that there is not dust in the heat sink. Check the environment temperature. Ensure that the switching frequency is not too high with respect to the environment temperature and the motor load.
		HT, CL	The temperature of the drive is lower than the minimum level allowed.	Warm up the ambient where the drive is installed.
		HT, CL	• Blockage in the cooling system • Minimum distance for inverter positioning not respected (see manual) • Cooling system not working properly	Check quality (dirt) and quantity of cooling air. Check ambient temperature.
		HT, CL	• Cooling system not working properly • Unsuitable environment	Check ambient temperature.
		HT, CL	PFC overcurrent	Reset alarm. In case of persistance, call for assistance.

Troubleshooting (Cont.)

Code	Fault	Mode	Possible Cause	Solution
62	**High Current At Start Up**			
		ALL	Low input voltage	Check input voltage
		ALL	Incorrect compressor wiring	Check wiring from inverter to compressor
		ALL	Defective compressor	Check compressor
		ALL	Damaged Inverter board	Remove wiring check if there is short circuit between P2-U, P2-V, P2-W, N2-U, N2-V, and N2-W. If so, replace inverter board. ***WARNING - Inverter board capacitors maintain high voltage for up to 15 minutes before fully discharging.
		ALL	Incorrect Inverter Board	Check inverter board to ensure it is the correct size ***WARNING - Inverter board capacitors maintain high voltage for up to 15 minutes before fully discharging.
63	**High Current Shutdown**			
			Mitsubishi Inverter 0930	
		HT, CL	Low input voltage	Check input voltage
		HT, CL	Incorrect compressor wiring	Check wiring from inverter to compressor
		HT, CL	Defective compressor	Check compressor
		HT, CL	Damaged Inverter board	Remove wiring check if there is short circuit between P2-U, P2-V, P2-W, N2-U, N2-V, and N2-W. If so, replace inverter board. ***WARNING - Inverter board capacitors maintain high voltage for up to 15 minutes before fully discharging.
		HT, CL	Incorrect Inverter Board	Check inverter board to ensure it is the correct size ***WARNING - Inverter board capacitors maintain high voltage for up to 15 minutes before fully discharging.
			Carel Inverter 1860	
		HT, CL	The drive has detected a current supplied that is too high due to: • sudden strong load increase • acceleration that is too high • wrong parameters values or inadequate motor	Check the load, the dimension of the motor and the cables. Decrease acceleration. Check the motor parameters.
		HT, CL	The drive has detected an instantaneous current supplied that is too high due to: • sudden strong load increase • motor cables short circuit • wrong parameters values or inadequate motor	Check the load, the dimension of the motor and the cables. Check the motor parameters.
		HT, CL	Refer to alarms 7 and 25 (redundancy) 1) Excessive compressor current draw. (compressor fault)	Refer to alarm 7 and 25 (redundancy) 1) Compressor fault (measure winding resistance, etc.). ***WARNING - Suitable instrumentation is required for high-displacement compressors (Example: compressors above 55 cc have phase-to-phase winding resistances lower than 1 ohm).
64	**High DC Voltage Shutdown**			
			Mitsubishi Inverter 0930	
		HT, CL	High input voltage	Check input voltage
		HT, CL	Damaged Inverter board	If DC bus voltage stays above 400V, replace inverter board. ***WARNING - Inverter board capacitors maintain high voltage for up to 15 minutes before fully discharging.
			Carel Inverter 1860	
		HT, CL	The DC voltage of the intermediate circuit has exceeded the limits envisioned due to: • deceleration that is too high • high over-voltage peaks on the power supply network	Decrease deceleration.

Troubleshooting

Code	Fault	Mode	Possible Cause	Solution
65	**Current Sensor Warning**			
		Mitsubishi Inverter 0930		
		HT, CL	Damaged Inverter board	Replace inverter board. ***WARNING - Inverter board capacitors maintain high voltage for up to 15 minutes before fully discharging.
		Carel Inverter 1860		
		HT, CL	Loss of data in memory	Reset alarm. In case of persistence, call for assistance.
		HT, CL	Overload CPU	Reset alarm. In case of persistence, call for assistance.
		HT, CL	Loss of data in memory	Reset alarm. In case of persistence, call for assistance.
		HT, CL	Irreparable damage to the internal “redundancy” circuit of the STO function	Permanent damage, contact service for replacement.
		HT, CL	Driver electronics damaged	Permanent damage, contact service for replacement.
		HT, CL	Driver electronics damaged	Permanent damage, contact service for replacement.
		HT, CL	Malfunction/Internal fault	Reset alarm. In case of persistence, call for assistance.
		HT, CL	Irreparable damage to the internal circuit	Permanent damage, contact service for replacement.
		HT, CL	Current measurement chain damaged (sensors, op amps, shunts, ..)	Permanent damage, contact service for replacment.
		HT, CL	DCbus current measurement chain damaged (sensors, op amps, ..)	Permanent damage, contact service for replacement.
66	**Heat Sink Thermistor Error**			
		ALL	Damaged Inverter board	Replace inverter board. ***WARNING - Inverter board capacitors maintain high voltage for up to 15 minutes before fully discharging.
67	**Current Sensor Error**			
		ALL	Damaged Inverter board	Replace inverter board. ***WARNING - Inverter board capacitors maintain high voltage for up to 15 minutes before fully discharging.
68	**Lack of Inverter COMM / Initialization**			
		ALL	Faulty control cable CN4	Check continuity on harness between Inverter Interface Module and CN4
		ALL	Faulty control cable CN2	Check continuity on harness between Inverter Interface Module and CN2
		ALL	Faulty 5 V power supply on Inverter Interface Module	Check C and OUT for 4.75-5.25 VDC
		ALL	Faulty 15 V power supply on Inverter Interface Module	Check GND and 15V for 14.25-15.75 VDC
		ALL	Faulty 18 V power supply on Inverter Interface Module	Check GND and 18V for 17.50-19.00 VDC
		ALL	Damaged Inverter board	Replace inverter board. ***WARNING - Inverter board capacitors maintain high voltage for up to 15 minutes before fully discharging.
69	**Low Voltage Shutdown - Inverter**			
		Mitsubishi Inverter 0930		
		HT, CL	Low input voltage	Check input voltage
		HT, CL	Incorrect compressor wiring	Check wiring from drive to compressor
		HT, CL	Incorrect wiring between CN2 and Inverter Interface Module	Check wiring from drive to Inverter Interface Module
		HT, CL	Damaged Inverter board	If DC bus voltage stays below 200V, replace drive board. ***WARNING - Inverter board capacitors maintain high voltage for up to 15 minutes before fully discharging.
		Carel Inverter 1860		
		HT, CL	The DC voltage of the intermediate circuit is below the limits envisioned due to: • insufficient power supply voltage • fault inside the drive	In the event of temporary cut-off of the power supply, reset the alarm and re-start the drive. Check the power supply voltage.

Troubleshooting (Cont.)

Code	Fault	Mode	Possible Cause	Solution
70	**Power Supply Sync Warning**			
		Mitsubishi Inverter 0930		
		HT, CL	Bad Input Voltage	Check input voltage
		Carel Inverter 1860		
		HT, CL	Too high AC power supply voltage	Check input power supply and if inductive load generating overvoltage are connected to the line.
		HT, CL	Too low AC power supply voltage	Check input power supply and cables.
		HT, CL	Refer to alarm 115	Refer to alarm 115.
71	**Converter Over Current Shutdown**			
		ALL	Low Input Voltage	Check input voltage
72	**Protect Operation - Compressor Current**			
		Mitsubishi Inverter 0930		
		ALL	Internal draging of compressor	Check compressor and if all looks normal and problem is still present, replace compressor
		ALL	High compressor load	Reduce maximum operating speed of the system
		ALL	Incorrect Inverter Board	Check board to ensure it is the correct size
		ALL	Damaged Inverter board	If DC bus voltage stays below 200V, replace drive board. ***WARNING - Inverter board capacitors maintain high voltage for up to 15 minutes before fully discharging.
		Carel Inverter 1860		
		ALL	• STO open (activation of an external protector, ..) • Wiring errors	Check external protection devices.
73	**Protect Operation - Heat Sink Temp.**			
		ALL	Improper inverter contact with heat sink	Check heat sink contact with inverter board ***WARNING - Inverter board capacitors maintain high voltage for up to 15 minutes before fully discharging.
74	**Protect Operation - Input Current**			
		ALL	Low input voltage	Check input voltage
		ALL	High compressor load	Reduce maximum operating speed of the system
		CL	Water temp at range limit	Decrease loop temp
		CL	Water temp at range limit	Decrease pump DT
		HT	Air temp at range limit	Decrease intering air temp
		HT	Air temp at range limit	Increase airflow setpoint
75	**Lack of Inverter Interface Module Communications**			
		ALL	Faulty control cable	Check continuity on harness between EXM and Inverter Interface Module.
		ALL	Damaged Inverter Interface Module	Replace Inverter Interface Module.
		ALL	Damaged EXM	Replace EXM

Troubleshooting

Code	Fault	Mode	Possible Cause	Solution
76	**Low Voltage Shutdown**			
		Mitsubishi Inverter 0930		
		ALL	Under voltage	Check power supply and 24Vac before and during operation
		ALL		Check power supply wires
		ALL		Check 24Vac transformer tap for correct power supply voltage
		Carel Inverter 1860		
		ALL	Input power supply phase loss, three-phase power supply unbalance	Check the input power supply phases to the drive, reduce motor power (speed).
		ALL	Motor cable disconnected	Check the connections of the motor cable.
		ALL	The drive has detected a ground current too high	Check ground insulation of the motor and wires.
		ALL	• It indicates a small earth fault on the motor • The current measurement chain (sensors, op amps, shunts, ..) is damaged	Check tightness/wiring of the inverter/compressor cables. If properly wired, then permanent damage to the motor.
		ALL	Excessive external load (e.g. fans) connected to the DCbus	Check external loads conneted to the DCbus terminal; especially when the external load starts.
		ALL	Excessive external load (e.g. fans) connected to the DCbus	Check external loads conneted to the DCbus terminal; especially when the external load starts.
		ALL	Incompatibility between compressor uSafety parameters that characterize the inverter as a PEC and the inverter size	Check that the compressor uSafety parameters are adequate. Check the compressor-inverter combination. Inverter probably too small.
77	**Low Leaving Air temp**			
		ALL	Low EAT	Bring EAT into range
		ALL	Check unit capacity	Run mode to check unit capacity
		ALL	Bad thermistor	Check temp vs. resistance curve per calculator
		ALL	Incorrect airflow	Check airflow and reduce if nessesary.
		ALL	Improperly installed airflow sensor	Check installation
78	**High Leaving Air temp**			
		ALL	High SAT	Bring SAT into range
		ALL	Low airflow	Increase airflow
		ALL	Bad thermistor	Check temp vs. resistance curve per calculator
		ALL	Improperly installed airflow sensor	Check installation
79	**Low Subcooling**			
		ALL	Low charge	Check unit capacity in mode check
80	**ECM Blower Motor Fault**			
		ALL	High level fault condition	See low level faults (81-86)
81	**ECM Lost Rotor Fault**			
		ALL	Check blower assembly	Blower wheel set screw loose
		ALL	Check blower assembly	Blower wheel dragging
		ALL	Check blower assembly	Blower wheel locked
82	**ECM Current Trip Fault**			
		ALL	Low input voltage	Check input voltage
		ALL	Bad ECM	Replace motor
83	**ECM temp Limit Fault**			
		ALL	High ambient motor temp	Reduce cabinet temp
		ALL	Dirty motor housing	Clean motor
84	**ECM Locked Rotor Fault**			
		ALL	Debris in blower assembly	Check blower and clean assembly
		ALL	Blower wheel draging	Check blower assembly
		ALL	Bad motor bearing	Replace motor
85	**ECM Over Voltage Fault**			
		ALL	High input voltage	Check input voltage
		ALL	Bad ECM	If nothing is found from other solutions, replace motor

Troubleshooting (Cont.)

Code	Fault	Mode	Possible Cause	Solution
86	**ECM Under Voltage Fault**			
		ALL	Low input voltage	Check input voltage
		ALL	Power cable	Check power cable
		ALL	Bad ECM	If nothing is found from other solutions, replace motor
87	**ECM Blocked Inlet Fault**			
		ALL	Low input voltage	Check input voltage to ensure it is a rated nominal voltage
		ALL	Dirty air filter	Clean or replace
		ALL	Dirty air coil	Clean air coil
		ALL	External static is too high	Correct duct work
88	**ECM Power Limit Warning**			
		ALL	Low input voltage	Check input voltage to ensure it is a rated nominal voltage
		ALL	Dirty air filter	Clean or replace
		ALL	Dirty air coil	Clean air coil
		ALL	External static is too high	Correct duct work
89	**ECM temp Limit Warning**			
		ALL	High ambient motor temp	Reduce cabinet temp
		ALL	Dirty motor housing	Clean motor
90	**ECM No Communications Fault**			
		ALL	Control signal cable	Check cable
		ALL	Bad ECM	If cable is OK, replace motor
		ALL	Bad EXM	If cable and motor are OK, replace EXM
		ALL	No input voltage	Check input voltage
91	**ECM Horsepower Configuration Fault**			
		ALL	Incorrect motor	Check motor size
		ALL	Incorrect unit configuration	Check unit configuration
92	**ECM Bad Parameter fault**			
		ALL	Incorrect HP motor detected	Check motor size
		ALL	Incorrect unit configuration	Check unit configuration
97	**Pressure Sensor Calibration Fault**			
		ANY	Unit Not Equalized	With unit mode OFF, wait appropriate period for transducers to equalize
		OFF	Bad discharge pressure transducer	Troubleshoot transducer
		OFF	Bad suction pressure transducer	Troubleshoot transducer
98	**Loop Flow w/o Loop Pump Warning**			
		OFF	Loop pump check valve stuck open	Remove internal check valve and clean. System should also be flushed using a 100 mesh strainer to remove particles from system.
99	**Excessive Transition Mode Operation**			
		ANY	Stuck Reversing Valve	Run system in service mode to verify operation or perform magnet test.
		ANY	Bad Compressor	Check compressor operation.
100	**Low Loop Pressure Warning**			
		ANY	Low Loop Pressure	Check loop pressure
		ANY	Bad Pressure (DPD) Sensor	Check sensor
		ANY	Improperly installed (DPD) sensor	Remove sensor and reinstall

Refrigeration Troubleshooting Form - Heating

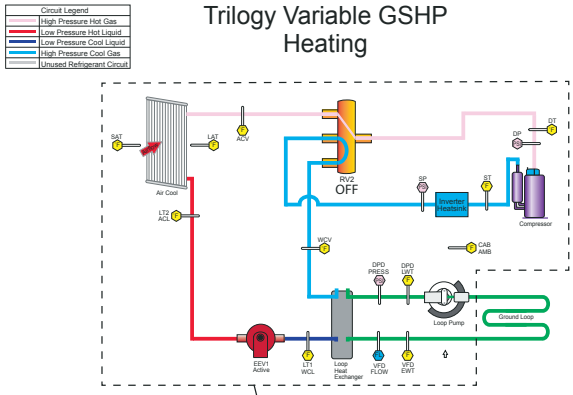

See next page for full-size image

VE Unit

Customer:

Startup Date:

Model #:

Serial #:

Antifreeze type & %:

Complaint:

	Description	Value	Notes
1	Voltage		
2	Compressor Current		
3	Inverter Current		
4	Compressor Speed		
5	Fan CFM		
6	Fan RPM		
7	EEV1 Position		
8	Suction Pressure (SP)		
9	Suction Saturation Temp		
10	Suction Superheat		
11	Discharge Temp (DT)		
12	Discharge Pressure (DP)		
13	Discharge Saturation Temp		
14	Discharge Superheat		
15	Subcooling		
16	Air Coil Liquid Temp (ACL)		
17	Air Coil Vapor Temp (ACV)		
18	Water Coil Liquid Temp (WCL)		
19	Water Coil Vapor Temp (WCV)		
20	HR / HE		
21	Supply Air Temp (SAT)		
22	Leaving Air Temp (LAT)		
23	Loop EWT		
24	Loop LWT		
25	Loop GPM		
26	Loop Pressure		
27	Loop Pump Speed		
28	Loop Pump Feedback		

Refrigeration Troubleshooting Form - Heating

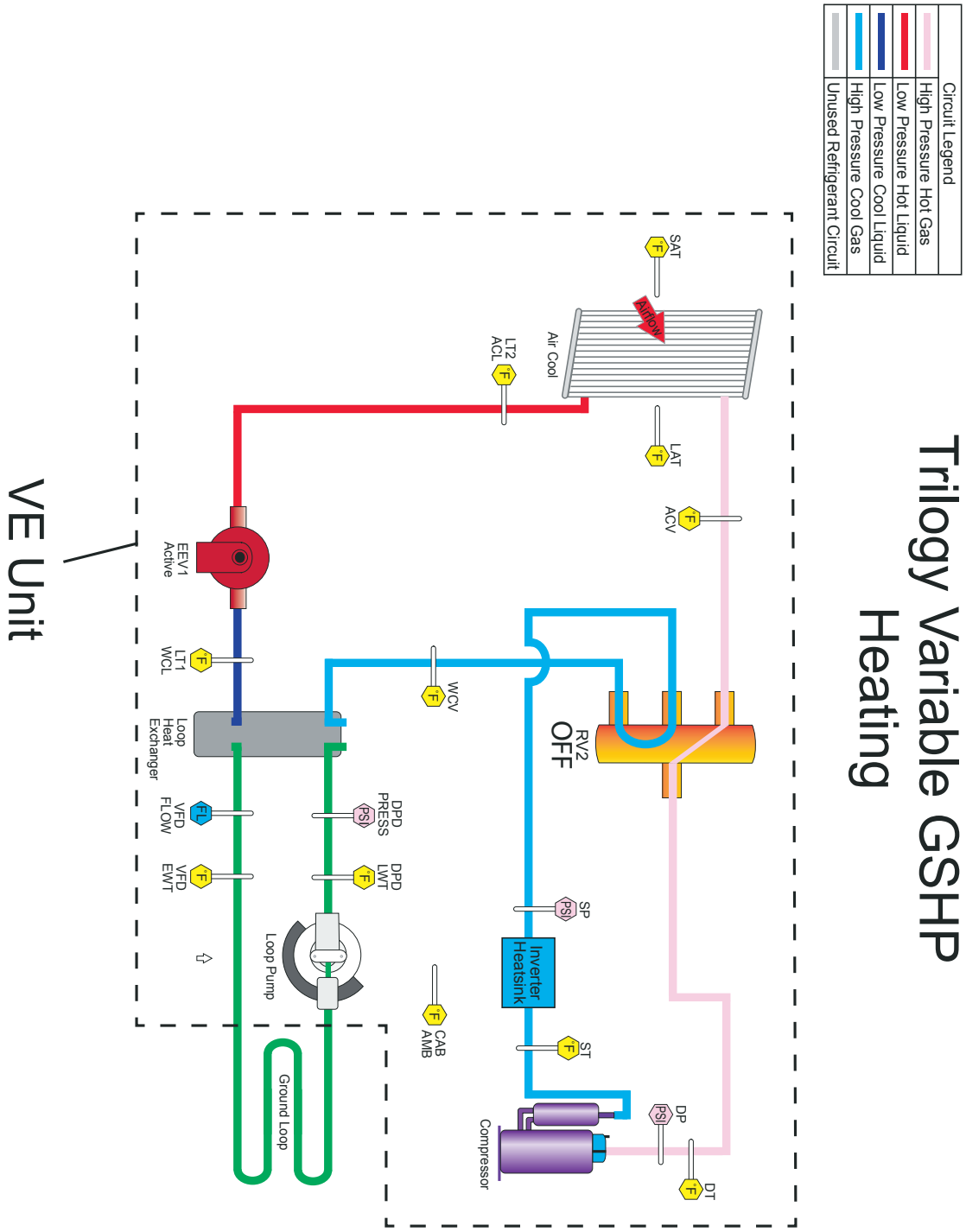

Refrigeration Troubleshooting Form - Cooling

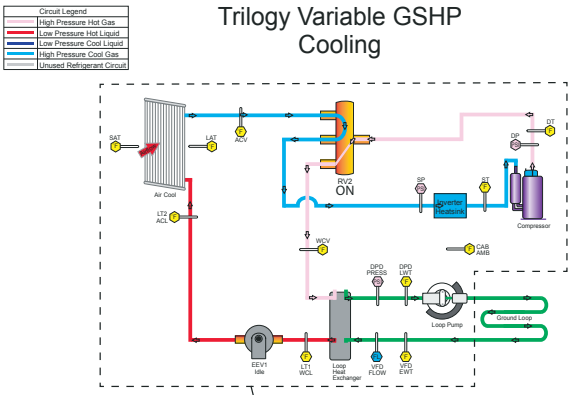

See next page for full-size image

VE Unit

Customer: _____

Startup Date: _____

Model #: _____

Serial #: _____

Antifreeze type & %: _____

Complaint:

Refrigeration Troubleshooting Form - Cooling

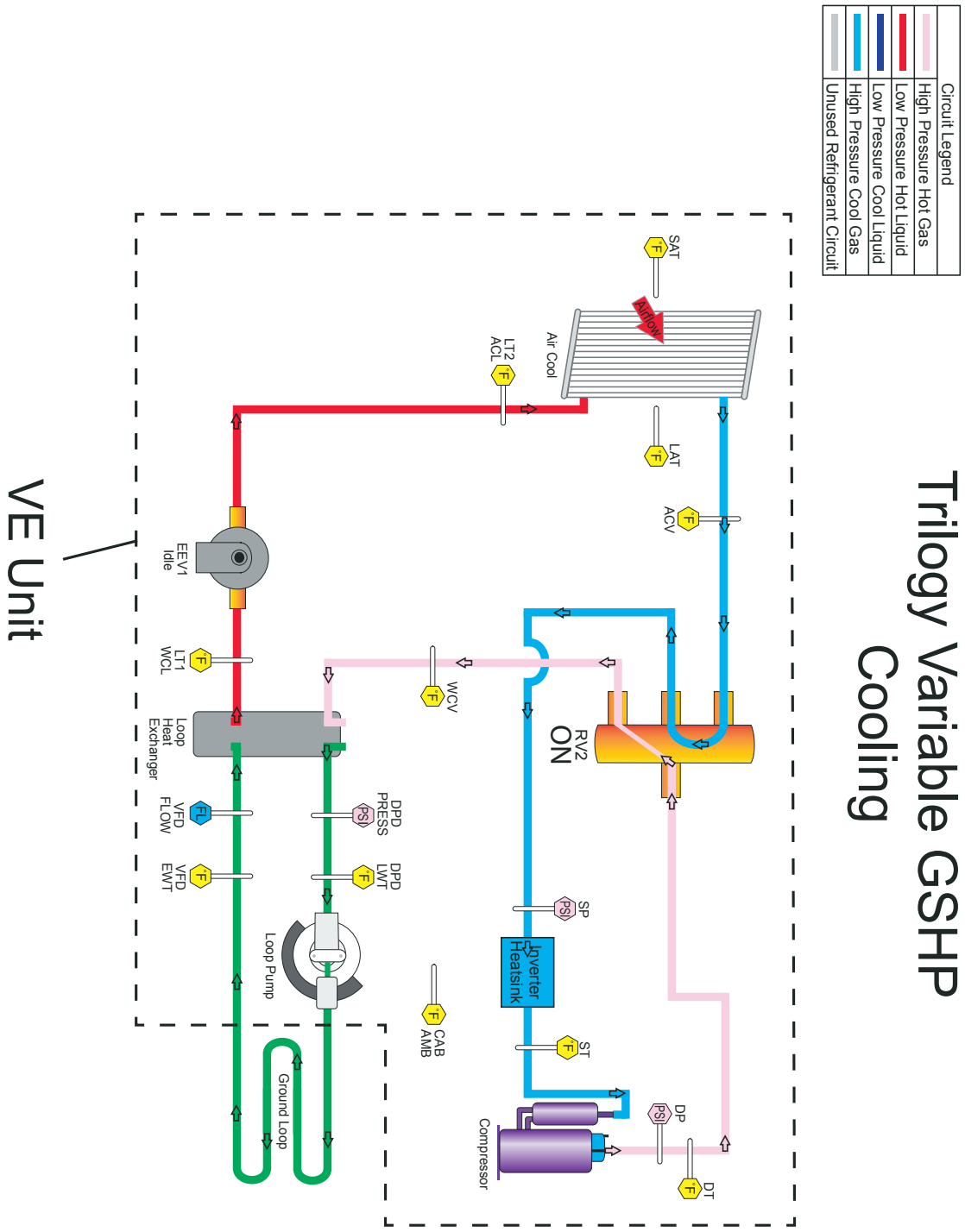

CLIMATE MASTER, INC.
LIMITED EXPRESS WARRANTY AND LIMITATION OF LIABILITY AND REMEDIES FOR RESIDENTIAL CLASS PRODUCTS WITH LABOR ALLOWANCE

This Limited Express Warranty And Limitation Of Liability And Remedies Affects Your Legal Rights And Should Be Read Carefully In Its Entirety.

Subject to the terms and conditions below, Climate Master, Inc. ("CM") extends a limited warranty ("Limited Warranty") for Residential Class heating and cooling equipment manufactured or sold by CM ("Products"), that was purchased on or after May 1, 2010 (this would generally include CM Units with serial numbers beginning with "N118" and higher), and installed in a one or two family residential dwelling, for personal, household or family purposes in the United States of America or Canada, ("Application"), to be free from defects and workmanship under normal use and maintenance. If you are unsure if this Limited Warranty applies to a Product you have purchased, contact CM at the phone number or address reflected below.

This Limited Warranty DOES NOT cover commercial applications of the Products. Commercial applications include any application other than installation in a one or two family residential dwelling for personal, household or family purposes. Refer to ClimateMaster Commercial Limited Express Warranty for details. Full copies are available for download at ClimateMaster.com .

This Limited Warranty provides a complete statement of CM's responsibilities to purchasers of the Products. No oral or written statement made by CM, any person or entity associated with CM or by any person or entity claiming to be associated with CM, including but not limited to statements made in sales literature, catalogs, or agreements to purchase or install the Products, is intended to provide an express or implied warranty of any kind and does not form a part of the basis of the bargain. Further, no such statement shall operate to extend, alter or modify the scope or terms of this Limited Warranty.

EXCEPT AS SPECIFICALLY SET FORTH HEREIN, THERE IS NO EXPRESS WARRANTY AS TO ANY OF CM'S PRODUCTS. CM MAKES NO WARRANTY AGAINST LATENT DEFECTS, OF MERCHANTABILITY OF THE PRODUCTS OR OF THE PRODUCTS FOR ANY PARTICULAR PURPOSE.

TERM: This Limited Warranty shall commence on the earliest to occur of the following dates: (i) proof of date of first occupancy; (ii) proof of date of start-up of the Product by a qualified and trained HVAC contractor; or (iii) six (6) months from the shipment date of the Product from CM if items (i) or (ii) are not available ("Warranty Inception Date"). The Limited Warranty shall extend as follows:

Costs of Repair or Replacement of Covered Product Parts

(1) Ten (10) years from the Warranty Inception date for air conditioning, heating and/or heat pump units built or sold by CM ("CM Units");

(2) Ten (10) years from the Warranty Inception Date for thermostats, auxiliary electric heaters, water storage tanks, and geothermal pumping modules built or sold by CM, when installed with CM Units;

(3) One (1) year from the date of shipment from CM for any other accessories or parts built or sold by CM, when installed with CM Units; and

(4) Ninety (90) days from the date of shipment from CM for all repair or replacement parts that are not supplied under this warranty.

Costs of Labor to Install Repaired or Replaced Covered Product Parts

(1) Five (5) years from the Warranty Inception Date for CM Units;

(2) Five years from the Warranty Inception Date for thermostats, auxiliary electric heaters, water storage tanks, and geothermal pumping modules built or sold by CM, when installed with CM Units

This Limited Warranty does not cover labor costs for installation of other accessories or parts built or sold by CM or any repaired or replacement parts that are not supplied under this Limited Warranty.

WHO IS COVERED: This Limited Warranty is provided only to the original owner of the one or two family residential dwelling in which the Products are first installed. This Limited Warranty is not transferrable. CM reserves the right to request any documentation necessary in its sole discretion to determine the date of purchase and occupancy of the residential dwelling or the date of installation and start-up of the Product(s). For the avoidance of any doubt, this Limited Warranty shall not extend to, and shall provide no remedies whatsoever for, any distributor or installer of the Products.

CLAIM PROCESS: To make a claim under this warranty, the Product or parts must be returned to CM in Oklahoma City, Oklahoma, freight prepaid, no later than ninety (90) days after the date of the failure of the part. If CM determines the Product or part to be defective and covered by this Limited Warranty, CM will either repair or replace the Product or part and send it to a CM-recognized distributor, dealer or service organization, F.O.B. CM, Oklahoma City, Oklahoma, freight prepaid. The Limited Warranty on any Product or part repaired or replaced under this Limited Warranty extends only through the original warranty period.

WHAT IS COVERED: Subject to the Term, this Limited Express Warranty covers the: (i) the cost of repair or replacement of any covered Product or Product parts; and (ii) the cost of labor incurred by CM authorized service personnel in connection with the installation of a repaired or replaced covered Product or Product part.

If a Product part is not available, CM will, at its option, provide a free suitable substitute part or provide a credit in the amount of the then factory selling price for a new suitable substitute part to be used by the claimant towards the retail purchase price of a new CM product. All labor costs are subject and limited to amounts specifically set forth in the then existing labor allowance\ schedule provided by CM's Warranty Department. Actual labor costs are not covered by this Limited Warranty to the extent they: (i) exceed the amount allowed under the allowance schedule; (ii) are not specifically provided for in the allowance schedule; (iii) are not performed by CM authorized service personnel; (iv) are incurred in connection installation of a part not covered by this Limited Warranty; or (v) are incurred outside the Term.

WHAT IS NOT COVERED: This Limited Warranty does not cover and does not apply to: (1) air filters, fuses, refrigerant, fluids, oil; (2) Products relocated after initial installation; (3) any portion or component of any system that is not supplied by CM, regardless of the cause of the failure of such portion or component; (4) Products on which the unit identification tags or labels, or rating labels, have been removed or defaced; (5) Products on which payment to CM, or to the owner's seller or installing contractor, is in default; (6) Products which have not been installed and maintained by a qualified and trained HVAC contractor; (7) Products installed in violation of applicable building codes or regulations including but not limited to wiring or voltage conditions; (8) Products subjected to accident, misuse, negligence, abuse, fire, flood, freezing, lightning, unauthorized alteration, misapplication, contaminated or corrosive air or liquid supply, operation at abnormal air or liquid temperatures or flow rates, or opening of the refrigerant circuit by unqualified personnel; (9) mold, fungus or bacteria damages; (10) corrosion or abrasion of the Product; (11) products supplied by others; (12) Products that have been operated in a manner contrary to CM's printed instructions; (13) Products which have insufficient performance as a result of improper system design, sizing or the improper application, installation, or use of CM's products; (14) electricity or fuel costs, or any increases or unrealized savings in same, for any reason whatsoever; or (15) operating any water storage tanks when they are empty or partially empty (i.e. dry firing), at temperatures exceeding the maximum setting of the operating or high limit controls, at pressures greater than those shown on the rating label, with non-potable water, with alterations or attachments (including energy savings devises) not specifically authorized in writing by CM, or without the free circulation of water. CM may request written documentation showing compliance with the above limitations.

In connection with repair or replacement of covered Product parts, CM is not responsible for: (1) the costs of any fluids, refrigerant or system components supplied by others, or associated labor to repair or replace the same, which is incurred as a result of repair or replacement of a covered Product part; (2) the costs of labor, refrigerant, materials or service incurred in diagnosis and removal of a covered Product part subject to repair or replacement under this Limited Warranty; (3) shipping costs incurred in sending a claimed defective part from the installation site to CM; (4) shipping costs to return a claimed defective part from CM to the installation site if the part is not covered by this Limited Warranty; (5) removal or disposal costs associated with the repair or replacement of covered Product Parts; or (6) the costs of normal maintenance.

OTHER WARRANTY LIMITATION: This Limited Warranty is given in lieu of all other warranties express or implied, in law or in fact. If, notwithstanding the disclaimers contained herein, it is determined that other warranties apply, any such warranty, including without limitation any express warranties or any implied warranties of fitness for particular purpose and merchantability, shall be limited in time to the Term of this Limited Warranty

LIMITATION OF REMEDIES: In the event of a breach of the Limited Warranty, a claimant's remedies will be limited to repair or replacement of a part or unit, or to furnish a new or rebuilt part or unit in exchange for the part or unit which has failed. If after written notice to CM's factory in Oklahoma City, Oklahoma of each defect, malfunction or other failure, and a reasonable number of attempts by CM to correct the defect, malfunction or other failure, the remedy fails of its essential purpose, CM shall refund the purchase price paid to CM in exchange for the return of the sold good(s). Said refund shall be the maximum liability of CM. THIS REMEDY IS THE SOLE AND EXCLUSIVE REMEDY OF THE BUYER OR THEIR PURCHASER AGAINST CM FOR ANY ACTION FOR BREACH OF CONTRACT, BREACH OF ANY WARRANTY, PATENT INFRINGEMENT, OR FOR CM'S NEGLIGENCE OR IN STRICT LIABILITY. NO ACTION ARISING OUT OF ANY CLAIMED BREACH OF THIS LIMITED WARRANTY MAY BE BROUGHT MORE THAN ONE (1) YEAR AFTER THE CAUSE OF ACTION HAS ARISEN.

LIMITATION OF LIABILITY: CM shall have no liability for any damages if CM's performance is delayed for any reason or is prevented to any extent by any event such as, but not limited to: any war, civil unrest, government restrictions or restraints, strikes, or work stoppages, fire, flood, accident, shortages of transportation, fuel, material, or labor, acts of God or any other reason beyond the sole control of CM.

CM EXPRESSLY DISCLAIMS AND EXCLUDES ANY LIABILITY FOR CONSEQUENTIAL, INCIDENTAL, SPECIAL AND/OR PUNITIVE DAMAGES BASED ON ANY THEORY IN CONTRACT, BREACH OF ANY EXPRESS OR IMPLIED WARRANTY, PATENT INFRINGEMENT, OR IN TORT, WHETHER FOR CM's NEGLIGENCE OR AS STRICT LIABILITY AND REGARDLESS OF WHETHER CM IS ADVISED OF THE POSSIBILITY OF SUCH DAMAGES.

OBTAINING WARRANTY PERFORMANCE: Normally, the dealer or service organization who installed the products will provide warranty performance for the owner. Should the installer be unavailable, contact any CM recognized distributor, dealer or service organization. If assistance is required in obtaining warranty performance, write or call:

Climate Master, Inc. • Customer Service • 7300 SW 44th Street • Oklahoma City, Oklahoma 73179 • (405) 745-6000 • e-service@climatemaster.com

NOTE: Some states or Canadian provinces do not allow the exclusion or limitation of implied warranties or the limitation of incidental or consequential damages for certain products supplied to consumers, or the limitation of liability for personal injury, so the above limitations and exclusions may be limited in their application to you. When the implied warranties are not allowed to be excluded in their entirety, they will be limited to the duration of the applicable written warranty. This warranty gives you specific legal rights, which may vary depending on local law. IF ANY PRODUCT TO WHICH THIS LIMITED WARRANTY APPLIES IS DETERMINED TO BE A "CONSUMER PRODUCT" UNDER THE MAGNUSON-MOSS WARRANTY ACT (15 U.S.C.A. §2301, ET SEQ.) OR OTHER APPLICABLE LAW, THE FOREGOING DISCLAIMER OF IMPLIED WARRANTIES SHALL NOT APPLY TO YOU, AND ALL IMPLIED WARRANTIES ON THIS PRODUCT, INCLUDING WARRANTIES OF MERCHANTABILITY AND FITNESS FOR THE PARTICULAR PURPOSE, SHALL APPLY FOR THE SAME TERM SET FORTH ABOVE (ONE YEAR) AS PROVIDED UNDER APPLICABLE LAW. The portions of this Limited Warranty and limitation of liability shall be considered fully severable, and all portions which are not disallowed by applicable law shall remain in full force and effect.

This warranty gives you specific legal rights, and you may also have other rights which vary from state to state and from Canadian province to Canadian province. Refer to your local laws for your specific rights under this Limited Warranty.

Please refer to the CM Installation, Operation and Maintenance Manual for operating and maintenance instructions.

Rev.: 3/20
Part No.: RP851

NOTES

NOTES

NOTES

Revision History

Date	Page #	Description
26 June, 23	60	Updated fault description
2 Feb., 22	27	Updated DIP Switch Settings
22 Dec., 21	All	Updated electrical data and configuration/operating information tables to reflect the upgrade in thermostat interface to iGate 2.0, Updated decoder, miscellaneous diagrams and illustrations, added reference to Carel inverter for models 1860, moved Performance Tables Legend before Performance Tables
05 Oct., 21	23-26	Added Water Quality Standards
6 April 21	32	Updated DIP Switch Settings
17 Feb. 21	27, 33	Updated tables
28 Oct., 19	3	Updated Decoder
4 Oct., 19	All	First Published

97B0119N01

CLIMATEMASTER
A NIBE GROUP MEMBER

7300 S.W. 44th Street
Oklahoma City, OK 73179
Phone: 405-745-6000
Fax: 405-745-6058
climatemaster.com

ClimateMaster works continually to improve its products. As a result, the design and specifications of each product at the time for order may be changed without notice and may not be as described herein. Please contact ClimateMaster's Customer Service Department at 1-405-745-6000 for specific information on the current design and specifications. Statements and other information contained herein are not express warranties and do not form the basis of any bargain between the parties, but are merely ClimateMaster's opinion or commendation of its products.

Engineered and Assembled in the USA.

© ClimateMaster, Inc. All rights reserved 2019