INSTALLATION INSTRUCTIONS

FOR PACKAGE GAS ELECTRIC UNITS

RGED SERIES 7.5, 8.5, 10.0 & 12.5 TON [26.4, 29.9, 35.2 & 44.0 KW]
60 HZ MODELS
WITH R-410A REFRIGERANT

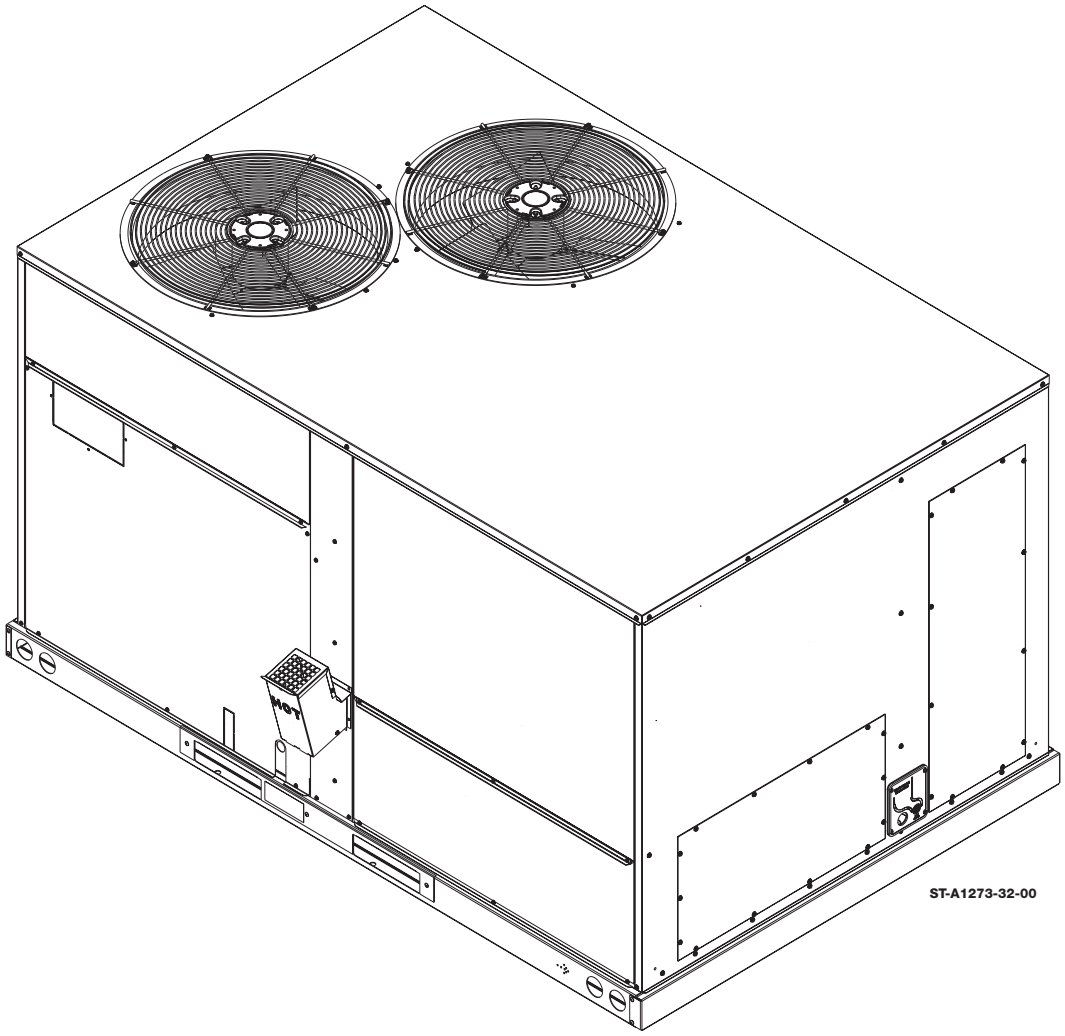

ST-A1273-32-00

CONTENTS

A. Important Saftey and General Infromation 4
B. General Specifications 5
C. Installation of the Unit 11
D. Duct and Venting 20
E. Electrical 27
F. Control/Thermostat Wiring 31
G. Gas 34
J. Startup and Operation 47
K. Test and Balance 55
M. Humidity Control 56
N. Diagnostics 59
P. Appendices 75
A - General Product Data 75
B - Electrical Data 78
C - Air Flow Performance Data 89
D - Heat & Cool Performance Data 97
E - Gas Heat Performance Data 116
F - Refrigerant Charging Charts 117
G - Wiring Diagrams & Schematics 125
R. Information for the Owner 156
S. Installation Check List and Job Site Sheet 157

DO NOT DESTROY THIS MANUAL. PLEASE READ CAREFULLY AND KEEP IN A SAFE PLACE FOR FUTURE REFERENCE BY A SERVICEMAN.

92-106932-02-00







RECOGNIZE THIS SYMBOL AS AN INDICATION OF IMPORTANT SAFETY INFORMATION!

⚠WARNING

IF THE INFORMATION IN THESE INSTRUCTIONS IS NOT FOLLOWED EXACTLY, A FIRE OR EXPLOSION MAY RESULT, CAUSING PROPERTY DAMAGE, PERSONAL INJURY OR DEATH.

⚠WARNING

THESE INSTRUCTIONS ARE INTENDED AS AN AID TO QUALIFIED SERVICE PERSONNEL FOR PROPER INSTALLATION, ADJUSTMENT AND OPERATION OF THIS UNIT. READ THESE INSTRUCTIONS THOROUGHLY BEFORE ATTEMPTING INSTALLATION OR OPERATION. FAILURE TO FOLLOW THESE INSTRUCTIONS MAY RESULT IN IMPROPER INSTALLATION, ADJUSTMENT, SERVICE OR MAINTENANCE, POSSIBLY RESULTING IN FIRE, ELECTRICAL SHOCK, CARBON MONOXIDE POISONING, EXPLOSION, PROPERTY DAMAGE, PERSONAL INJURY OR DEATH.

⚠WARNING

PROPOSITION 65 WARNING: THIS PRODUCT CONTAINS CHEMICALS KNOWN TO THE STATE OF CALIFORNIA TO CAUSE CANCER, BIRTH DEFECTS OR OTHER REPRODUCTIVE HARM.

⚠WARNING

— Do not store or use gasoline or other flammable vapors and liquids, or other combustible materials in the vicinity of this or any other appliance.

— WHAT TO DO IF YOU SMELL GAS
- Do not try to light any appliance.
- Do not touch any electrical switch; do not use any phone in your building.
- Immediately call your gas supplier from a neighbor's phone. Follow the gas supplier's instructions.
- If you cannot reach your gas supplier, call the fire department.
- Do not return to your home until authorized by the gas supplier or fire department.

— DO NOT RELY ON SMELL ALONE TO DETECT LEAKS. DUE TO VARIOUS FACTORS, YOU MAY NOT BE ABLE TO SMELL FUEL GASES.
- U.L. recognized fuel gas and CO detectors are recommended in all applications, and their installation should be in accordance with the manufacturer's recommendations and/or local laws, rules, regulations, or customs.

— Improper installation, adjustment, alteration, service or maintenance can cause injury, property damage or death. Refer to this manual. Installation and service must be performed by a qualified installer, service agency or the gas supplier. In the commonwealth of Massachusetts, installation must be performed by a licensed plumber or gas fitter for appropriate fuel.

BA001-02

DO NOT DESTROY THIS MANUAL. PLEASE READ CAREFULLY AND KEEP IN A SAFE PLACE FOR FUTURE REFERENCE BY A SERVICEMAN.

CONTENTS (DETAILED)

A. Important Saftey and General Infromation 4
A.1. Important Saftey and General Information 4
A.2. Agency Performance Audit and Efficiency Testing Notice 4
A.3. Importance of a Quality Installation 4
A.4. Importance of Air Flow and Setup 4
A.5. Checking Product and Inspection 4
B. General Specifications 5
B.1. Saftey Warnings 5
B.2. Major Components 6
B.3. Product Data Information 6
C. Installation of the Unit 11
C.1. General 11
C.2. Tool and Refrigerant 11
C.3. Choosing a Location 12
C.4. Setting the Unit 14
C.5. Installing Condensate Drain 19
C.6. Final Installation Inspection 20
D. Duct and Venting 20
D.1. Air Flow and Static Pressure 20
D.2. Duct Requirements and Best Practices 20
D.3. Filters 21
D.4. Economizers and Fresh Air Dampers 23
D.5. Smoke Detectors 26
E. Electrical 27
E.1. Electrical Saftey Information 27
E.2. Electrical Data 29
E.3. Electrical Connections 29
F. Control/Thermostat Wiring 31
F.1. T-Stat Field Connections 31
F.2. Routing Control Wiring 33
F.3. Measuring Control Voltage Loads 33
G. Gas 34
G.1. Gas Piping Requirements 34
G.2. Procedure: Connecting Gas Lines to Gas Valve 38
G.3. LP Conversion 39
G.4. Operation and Testing 40
J. Startup and Operation 47
J.1. Final Inspection 47
J.2. Turning on Power for the First time 47
J.3. Checking and Adjusting Air Flow 48
J.4. Checking Cooling Operation 50
J.5. Checking Heating Operation 52
K. Test and Balance 55
K.1 Air Flow Charts and Information 55
K.2. Air Flow Adjustments 55
M. Humidity Control 56
M.1. Dehumidification System Information 56
M.2. Humidity Sensor Installation 57
M.3. Humidity Control Settings and Configuration 58
N. Diagnostics 59
N.1. Diagnostics Chart 59
N.2. Alarm Codes - Full List 60
N.3. Common Mistakes 74
P. Appendices 75
Appendix A - General Product Data 75
Appendix B - Electrical Data 78
Appendix C - Air Flow Performance Data 89
Appendix D - Heat & Cool Performance Data 97
Appendix E - Gas Heat Performance Data 116
Appendix F - Refrigerant Charging Charts 117
Appendix G - Wiring Diagrams & Schematics 125
Appendix J - Unit Tie-Down 157
R. Information for the Owner 162
S. Installation Check List and Job Site Sheet 165
R.2 Product Model and Serial Number 169
S. Installation Check List and Job Site Sheet 170

A. IMPORTANT SAFETY AND GENERAL INFORMATION

A.1 Introduction

This booklet contains the installation and operating instructions for your 7.5 ton, 8.5 ton, 10 ton, or 12.5 ton combination gas heating/electric cooling unit. There are some precautions that should be taken to ensure proper operation. Improper installation can result in unsatisfactory operation or dangerous conditions.

Read this booklet and any instructions packaged with separate equipment required to make up the system prior to installation. Give this booklet to the owner and explain its provisions. The owner should retain this booklet for future reference.

⚠WARNING: The manufacturer's warranty does not cover any damage or defect to the air conditioner caused by the attachment or use of any components, accessories or devices (other than those authorized by the manufacturer) into, onto or in conjunction with the air conditioner.

You should be aware that the use of unauthorized components, accessories or devices may adversely affect the operation of the air conditioner and may also endanger life and property. The manufacturer disclaims any responsibility for such loss or injury resulting from the use of such unauthorized components, accessories or devices.

A.2 Agency Performance Audit and Efficiency Testing Notice

NOTICE: BREAK-IN PERIOD

Prior to agency testing, run the compressor for 16 hours at 115°f outdoor ambient temperature and 80° dry bulb / 75° wet bulb indoor ambient temperature.

NOTICE: EFFICIENCY TESTING NOTICE

For purposes of verifying or testing efficiency ratings, the test procedure in title 10 Appendix M to Subpart B of Part 430 (Uniform Test Method for Measuring the Energy Consumption of Central Air Conditioners and Heat Pumps) and the clarifying provisions provided in the standards listed below that were applicable at the date of manufacture should be used for test set up and performance.

SETUP

- ASHRAE 37 - 2009 (RA 2019)

PERFORMANCE:

- ANSI/ASHRAE 90.1:
  - o 2013 for ZT models and some ZS models
  - o 2007 for ZR models and some ZS models
- ANSI/ASHRAE 103 (2017)
- AHRI Operations for Unitary Large AC Equipment 340/360 (2015)
- CSA Z21.47 (2016)

SAFETY

UL 1995 5th Edition

CSA Z21.47 (2016)

A.3. Importance of a Quality Installation

Optimal system performance and longevity depend upon a quality and proper installation. Failure to properly setup and commission this unit could result in undesirable operation and subsequent faults and potential failures.

Carefully follow all guidelines listed in the manual and industry best practices. Conform to all local code requirements. Contact your local technical representative with any questions or concerns.

A.4. Importance of Air Flow and Setup

Optimal system performance is also dependent upon having the ideal airflow across the condensing and evaporating coils, and upon matching the charge weight to the manufacturer's spec for the unit. Improper or restricted air flow, and incorrect charge weight, will hinder the performance of the unit. Please refer to the manufacturer's recommended clearances for setting the unit and the included guide for setting air flow. Refer to the rating plate for the charge weight.

A.5. Checking Product and Inspection

Upon receiving the unit, inspect it for any damage from shipment. Claims for damage, either shipping or concealed, should be filed immediately with the shipping company. IMPORTANT: Check the unit model number, heating size, electrical characteristics, and accessories to determine if they are correct.

B. GENERAL SPECIFICATIONS

B.1 Safety Warnings

⚠WARNING: Use only with type of gas approved for this unit. Refer to the unit rating plate.

⚠WARNING: Install this unit only in a location and position as specified in the location requirements and considerations section of these instructions. Provide adequate combustion and ventilation air to the unit space as specified in the venting section of these instructions.

⚠WARNING: Provide adequate combustion and ventilation air to the unit space as specified in the combustion and ventilation air section of these instructions.

⚠WARNING: Combustion products must be discharged outdoors. Refer to local building codes for ducting combustion exhaust.

⚠WARNING: Never test for gas leaks with an open flame. Use a commercially available soap solution made specifically for the detection of leaks to check all connections, as specified in gas supply and piping section of these instructions.

⚠WARNING: Always install unit to operate within the unit's intended temperature-rise range with a duct system which has an external static pressure within the allowable range, as specified in ducting section of these instructions. See also unit rating plate.

⚠WARNING: When a unit is installed so that supply ducts carry air circulated by the unit to areas outside the space containing the unit, the return air shall also be handled by duct(s) sealed to the unit casing and terminating outside the space containing the unit.

⚠WARNING: This unit may be used to heat the building or structure during construction if the following installation requirements are met. Installation must comply with all installation instructions including:

- Furnace operating under thermostatic control;
- Return air duct sealed to the furnace;
- Air filters in place;
- Set furnace input rate and temperature rise per rating plate marking;
- Return air temperature maintained between 55°f (13°c) and 80°f (27°c);
- Clean furnace, duct work and components upon substantial completion of the construction process, and verify furnace operating conditions including ignition input rate, temperature rise and venting, according to the instructions.

B. GENERAL SPECIFICATIONS

B.2. Major Components

The unit includes a hermetically-sealed refrigerating system consisting of a scroll compressor, condenser coil, evaporator coil with TXV, a circulation air blower, a condenser fan, a heat exchanger assembly, gas burner and control assembly, combustion air motor and fan, and all necessary internal electrical wiring. The cooling system of these units is factory evacuated, charged, and performance tested. Refrigerant amount and type are indicated on rating plate.

B.3. Product Data Information

B.3.1. Dimensional Information

IMPORTANT: This unit must be mounted level in both directions to allow water to drain from the condenser section and condensate pan.

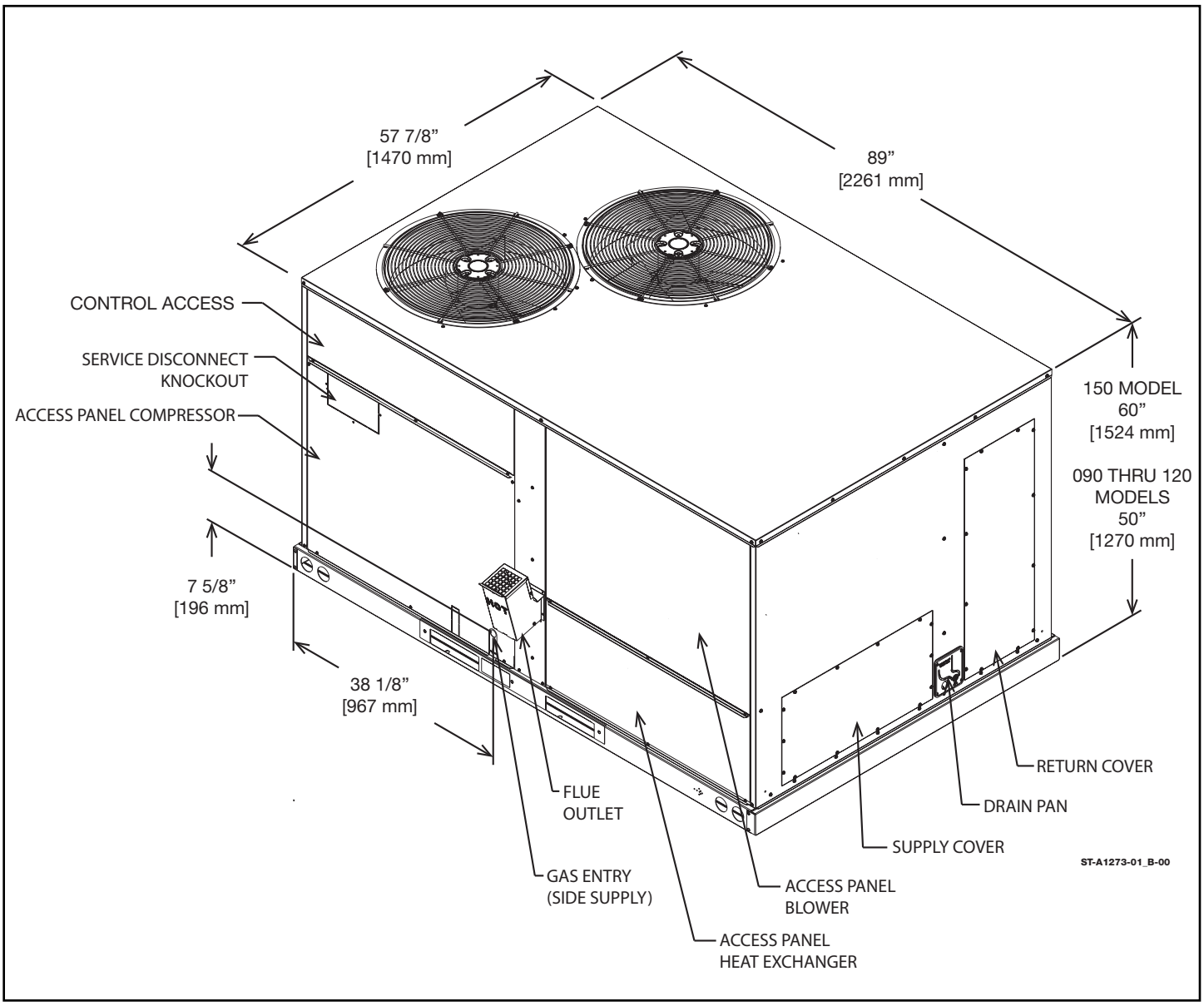

B.3. Product Data Information

B.3.1. Dimensional Information (Cont.)

IMPORTANT: This unit must be mounted level in both directions to allow water to drain from the condenser section and condensate pan.

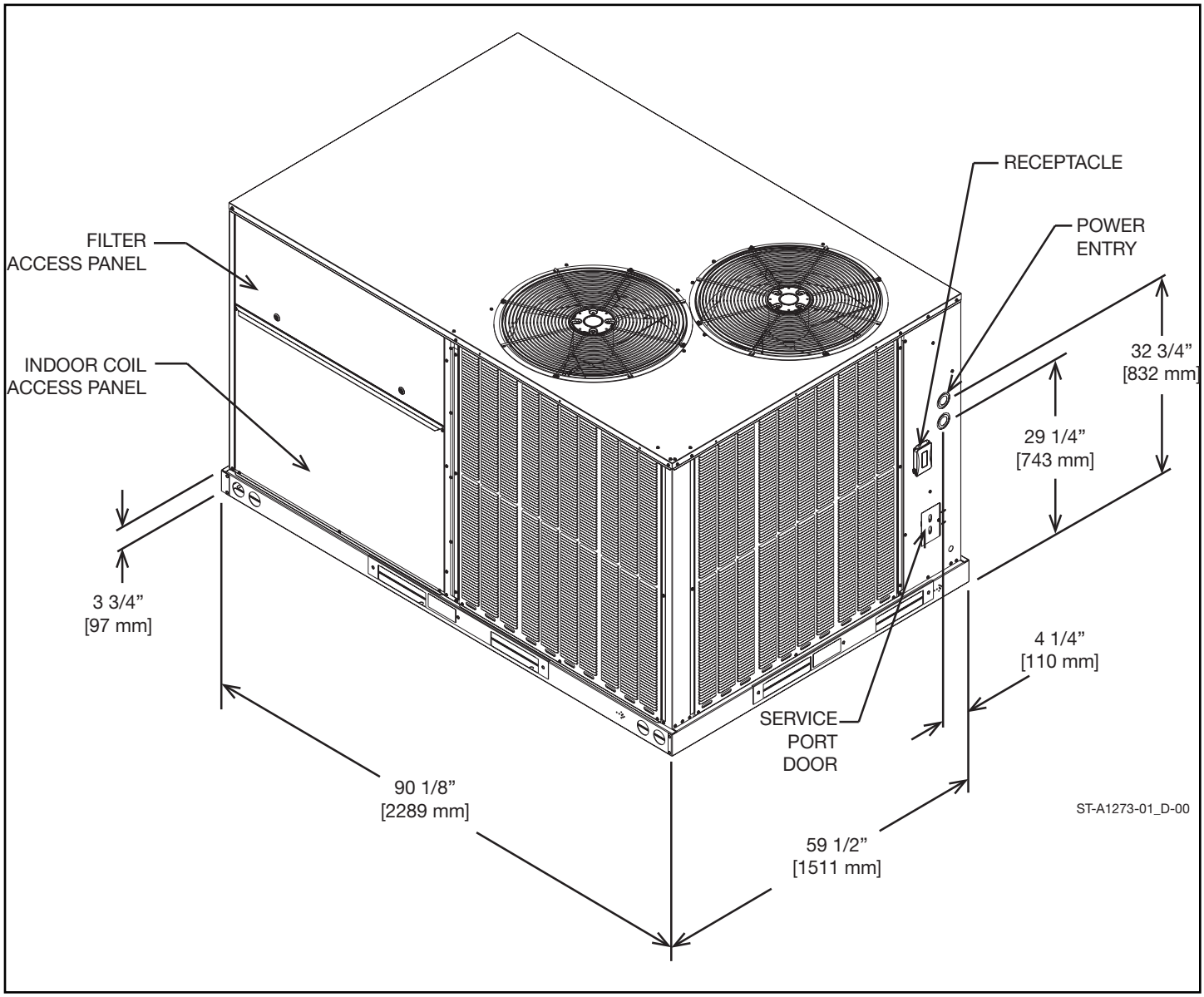

B.3.2. Product Specifications

The packaged Gas Electric rooftop unit is available with 150k, 205k, and 225k BTUHs heating input (either factory installed or field installed). Cooling capacity is 7.5, 8.5, 10, and 12.5 nominal tons. Units are convertible from horizontal supply/return to bottom supply/return by relocation of supply/return cover panels. See section ***C.3.5. Cover Panel Installation/ Conversion Procedure*** for more details.

The units are weatherized for mounting outside of the building.

⚠WARNING: Units are not design certified to be installed inside the structure. Doing so can cause inadequate unit performance as well as property damage or death.

B. GENERAL SPECIFICATIONS

B.3. Product Data Information

B.3.3. General Data

*See **Appendix A** towards the end of this manual for General Data.*

B.3.4. Electrical Data Reference

*See **Appendix B** towards the end of this manual for Electrical Data.*

B.3.5. Air Flow Performance Data

*See **Appendix C** towards the end of this manual for Air Flow Performance Data.*

B.3.6. Supply and Return Duct Dimensions

Figure B.3.6. - A: Supply And Return Dimensions For Downflow Applications (Bottom View Looking Up)

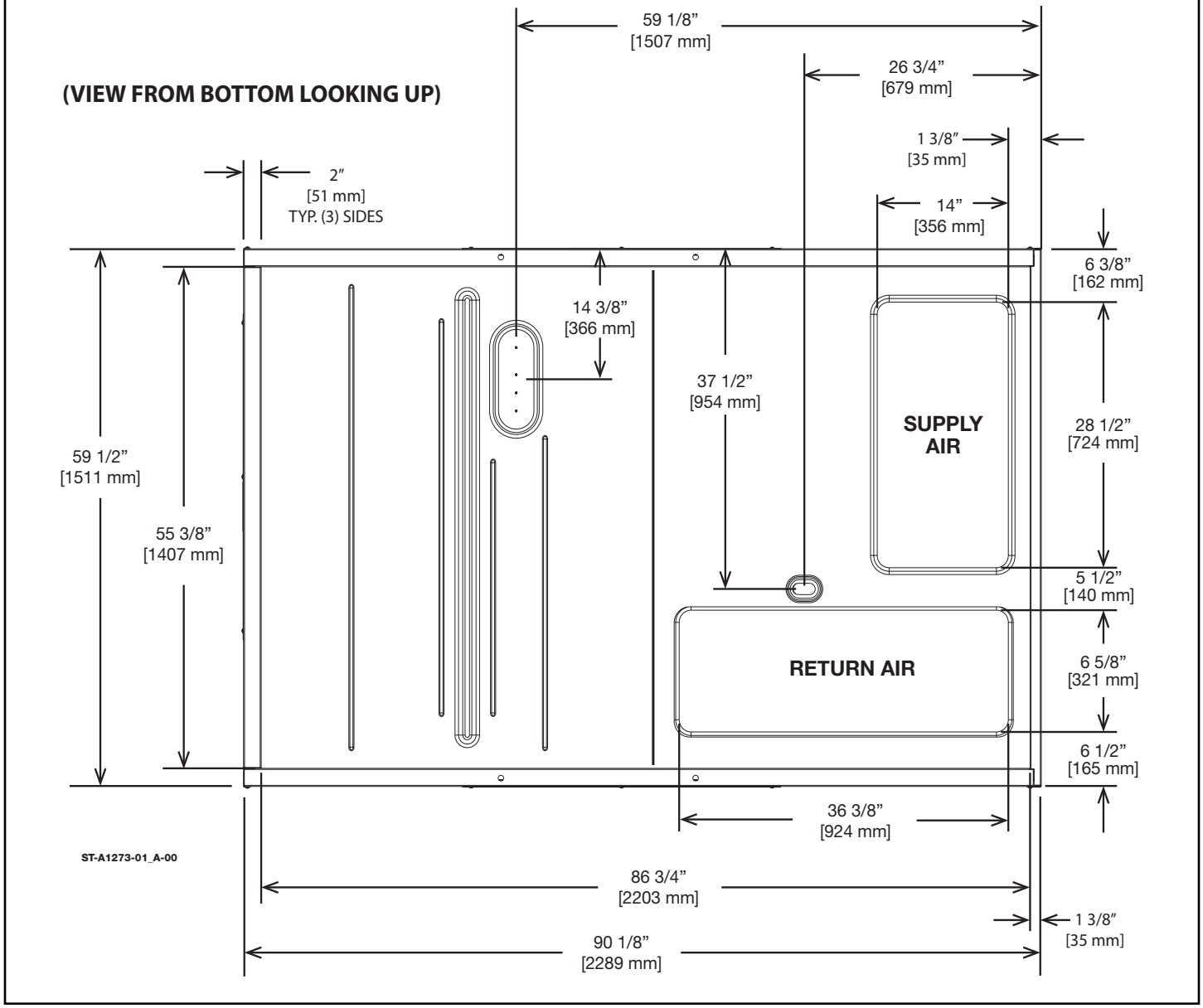

B.3.6. Supply and Return Duct Dimensions

Figure B.3.6. - B: Supply And Return Dimensions For Horizontal Applications

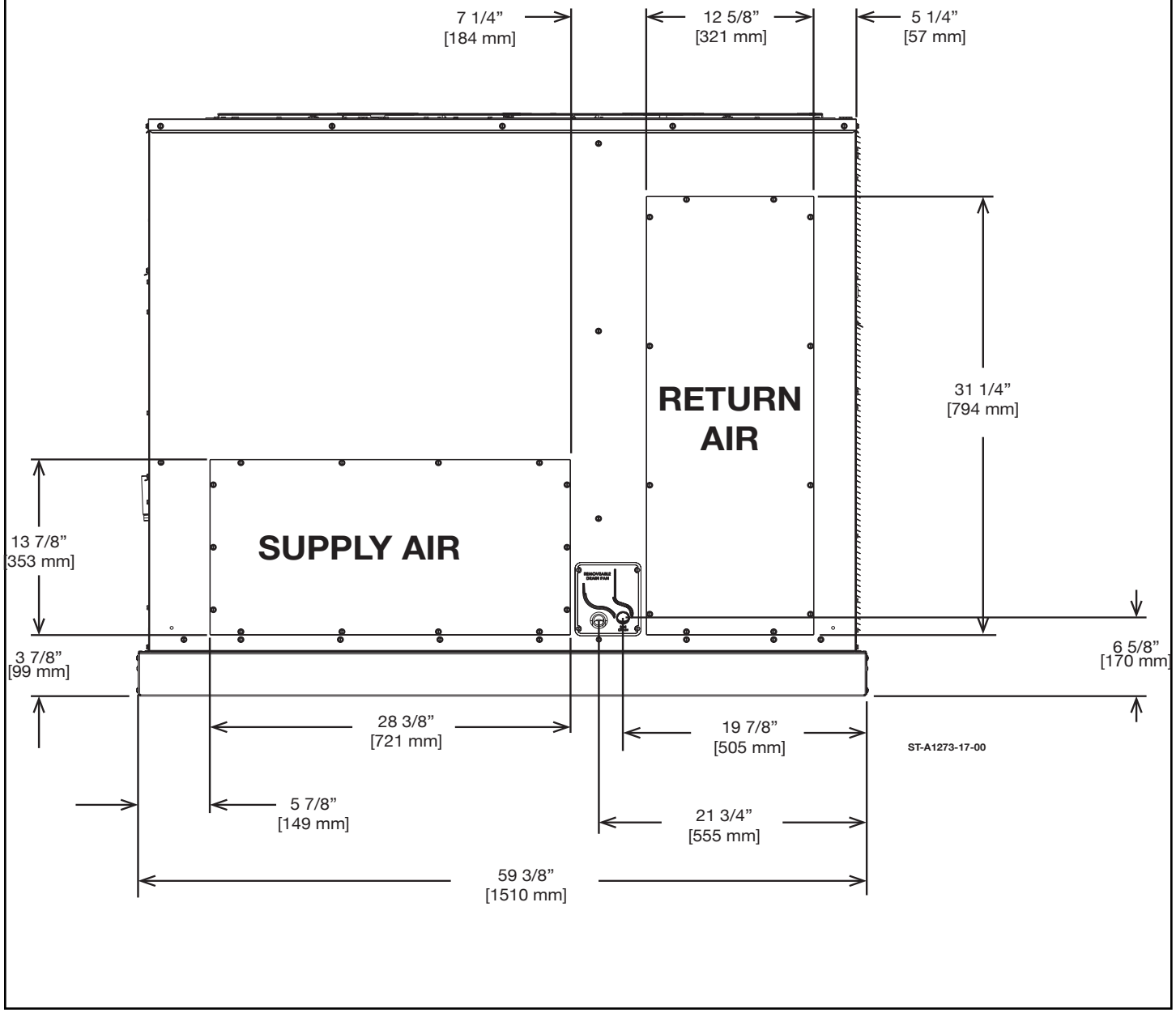

B. GENERAL SPECIFICATIONS

B.3. Product Data Information

B.3.7. Curb Dimensions

NOTE: See section C.3.3. Rooftop Installation for more information for installing the unit on a curb.

Figure B.3.7. – A: Roofcurb Complete Assembly

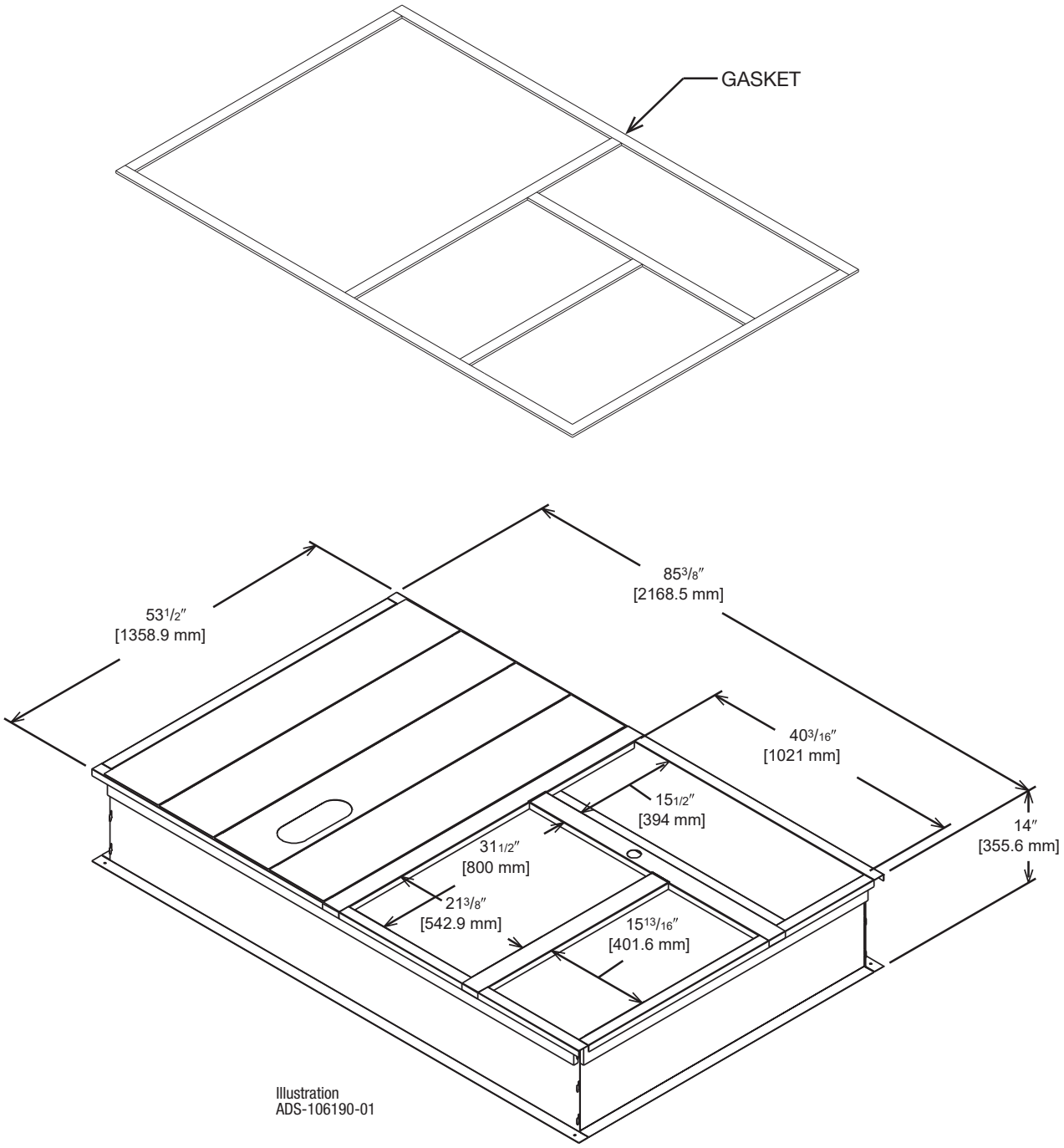

C. INSTALLATION OF THE UNIT

C.1. General

C.1.1. Installation

Install this unit in accordance with local and national standards. Any and all work must be done by authorized personnel.

C.1.2. Pre-Installation Checkpoints

Before attempting any installation, carefully consider the following points:

- Structural strength of supporting members (Rooftop Installation)
- Clearances and provision for servicing
- Power supply and wiring
- Gas supply and piping
- Air duct connections and sizing
- Drain facilities and connections
- Location for minimum noise and vibration - away from bedroom windows

C.2. Tool and Refrigerant

C.2.1. Tools Required for Installing and Servicing R-410A Models

Manifold Sets:

- Up to 800 PSIG High Side
- Up to 250 PSIG Low Side
- 550 PSIG Low Side Retard

Manifold Hoses:

- Service Pressure Rating of 800 PSIG
- Zero-loss fittings

Recovery Cylinders:

- 400 PSIG Pressure Rating

Dept. of Transportation

- 4BA400 or BW400

C.2.2. Specifications of R-410A

All units are factory charged with R-410a Refrigerant.

Combustibility: At pressures above 1 atmosphere, mixture of R-410A and air can become combustible. **R-410A and air should never be mixed in tanks or supply lines, or be allowed to accumulate in storage tanks. Leak checking should never be done with a mixture of R-410A and air.** Leak checking can be performed safely with nitrogen or a mixture of R-410A and nitrogen.

C.2.3. Quick Reference Guide for R-410A

Ensure that servicing equipment is designed to operate with R-410A.

- R-410A refrigerant cylinders are pink.
- R-410A, as with other HFC's is only compatible with POE oils.
- Vacuum pumps will not remove moisture from POE oil.
- R-410A systems are to be charged with liquid refrigerants.
- Do not install a suction line filter drier in the liquid line.
- A liquid line filter drier is standard on every unit.
- Desiccant (drying agent) must be compatible for POE oils and R-410A.

C.2.4. Evaporator Coil/TXV

The thermostatic expansion valve is specifically designed to operate with R- 410A. The existing evaporator must be replaced with the factory specified TXV evaporator specifically designed for R-410A.

⚠WARNING: Disconnect all power to unit before starting maintenance. Failure to do so can cause electrical shock resulting in personal injury or death. Regular maintenance will reduce the buildup of contaminants and help to protect the unit's finish.

C. INSTALLATION OF THE UNIT

C.3. Choosing a Location

C.3.1.Unit Location: Allowable Clearances and Operational Issues

The unit location must comply with the allowable clearances listed in ***Figure C.3.1. - A.*** Failure to comply with the recommended clearances may result in operational issues such as decreased capacity, restricted condenser airflow, and condenser motor fatigue.

Figure C.3.1. - A: Allowable Clearances

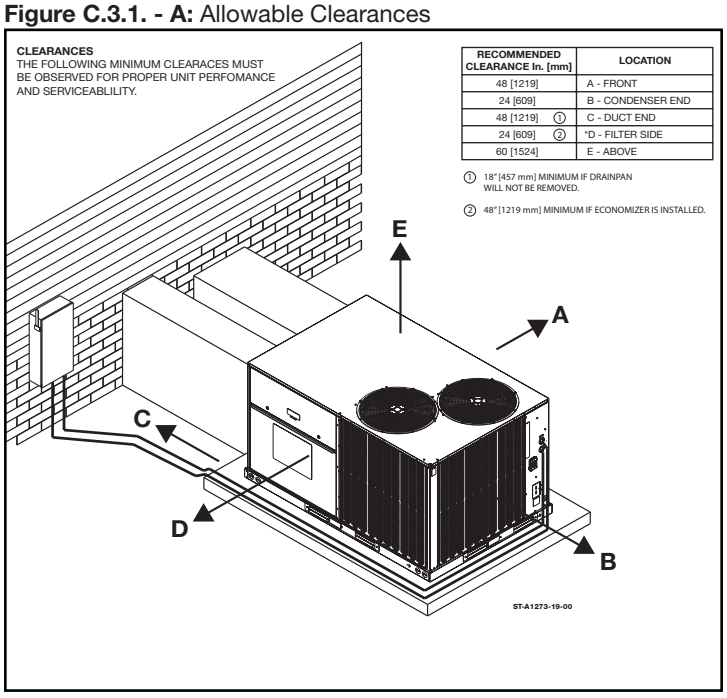

C.3.2. Outside Installation

⚠WARNING: These units are designed certified for outdoor installation only. Installation inside any part of a structure can result in inadequate unit performance as well as property damage. Installation inside can also cause recirculation of flue products into the conditioned space resulting in personal injury or death.

1. Select a location where external water drainage cannot collect around unit.

2. Provide a level slab sufficiently high enough above grade to prevent surface water from entering the unit

3. Locate the unit to provide proper access for inspection and servicing as shown in ***Figure C.3.1. - A.***

4. Locate unit where operating sounds will not disturb owner or neighbors.

5. Locate unit so roof runoff water does not pour directly on the unit. Provide gutter or other shielding at roof level. Do not locate unit in an area where excessive snow drifting may occur or accumulate.

6. Where snowfall is anticipated, the height of the unit above the ground level must be considered. Mount unit high enough to be above anticipated maximum area snowfall and to allow combustion air to enter the combustion air inlet.

7. Select an area which will keep the areas of the vent, air intake, and A/C condenser fins free and clear of obstructions such as weeds, shrubs, vines, snow, etc. Inform the user accordingly.

C.3.3. Rooftop Installation

1. Before locating the unit on the roof, make sure that the roof structure is adequate to support the weight involved. (See Electrical & Physical Tables in this manual.) **THIS IS VERY IMPORTANT AND IS THE INSTALLER'S RESPONSIBILITY.**

2. For rigging and roofcurb details, see section ***C.4.3.***

3. The location of the unit on the roof should be such as to provide proper access for inspection and servicing.

IMPORTANT: *If unit will not be put into service immediately, block off supply and return air openings to prevent excessive condensation.*

C.3.4. Corrosive Environments

The metal parts of this unit may be subject to rust or deterioration in adverse environmental conditions. This oxidation could shorten the equipment's useful life. Salt spray, fog or mist in seacoast areas, sulphur or chlorine from lawn watering systems, and various chemical contaminants from industries such as paper mills and petroleum refineries are especially corrosive.

If the unit is to be installed in an area where contaminants are likely to be a problem, give special attention to the equipment location and exposure.

1. Avoid having lawn sprinkler heads spray directly on the unit cabinet.

2. In coastal areas, install the unit on the side of the building away from the waterfront.

3. In some situations, fencing or shrubs may give some protection against contaminants. Be mindful of the allowable clearances.

4. Frequent washing of the cabinet, fan blade and coil with fresh water will remove most of the salt or other contaminants that build up on the unit.

5. Regular cleaning and waxing of the cabinet with an automobile polish will provide some protection.

6. A good liquid cleaner may be used several times a year to remove matter that will not wash off with water.

Several different types of protective coatings are offered in some areas. These coatings may provide some benefit, but the effectiveness of such coating materials cannot be verified by the equipment manufacturer. The best protection is frequent cleaning, maintenance and minimal exposure to contaminants.

C.3.5. Cover Panel Installation/Conversion Procedure

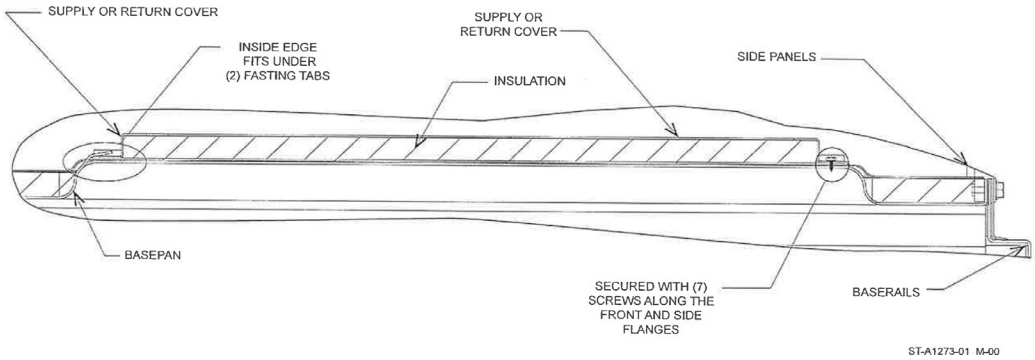

Figure C.3.5. – A: Downflow to Horizontal Conversion

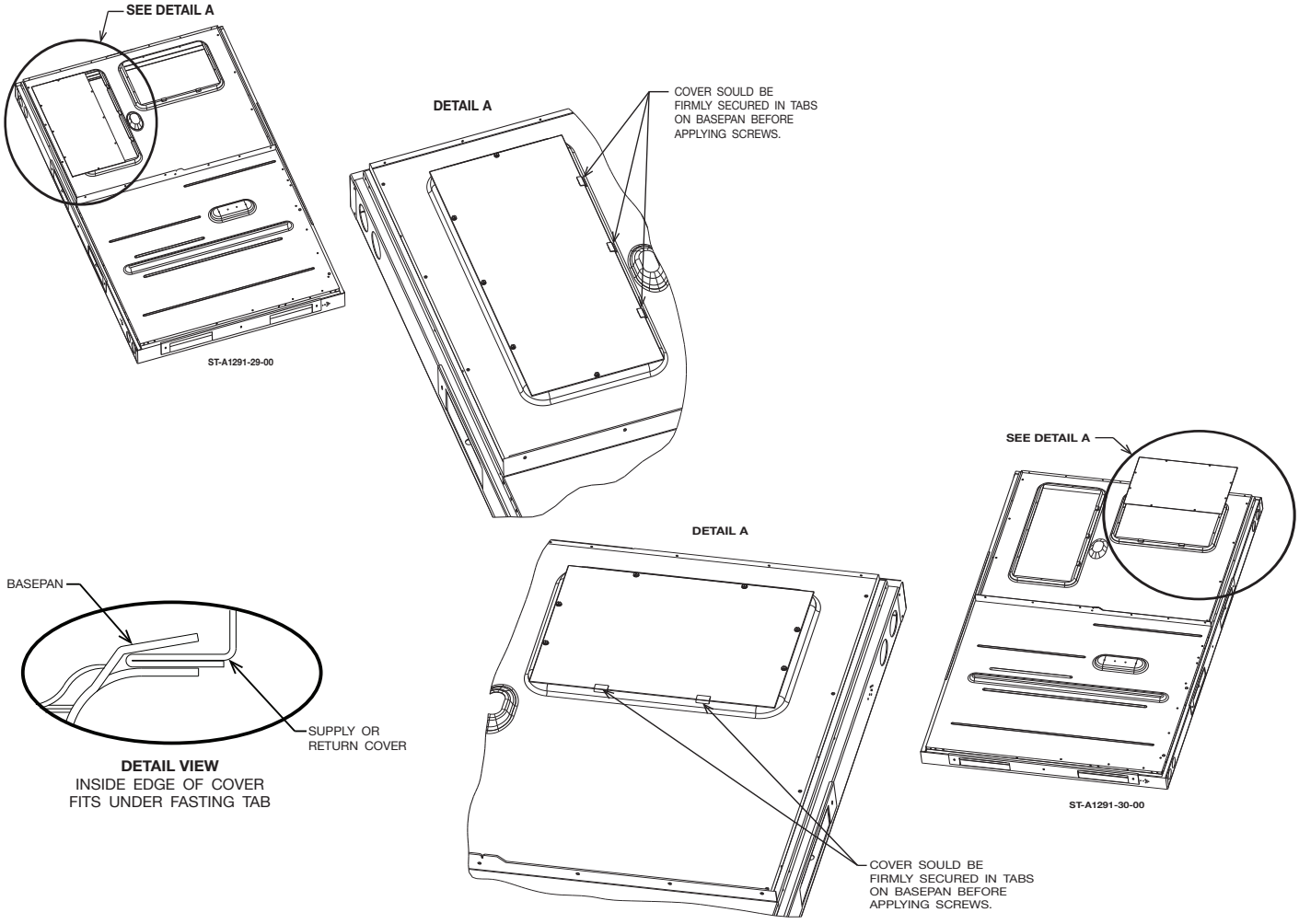

FROM DOWNFLOW TO HORIZONTAL

1. Remove the covers from the supply and return openings on the unit. ***See Figure B.3.6. – B*** for reference.
2. Install the covers over the supply and return openings in the basepan, painted side up, inserting the leading flange under the bracket provided. Place the back flange to top of the front bracket provided. ***See Figure C.3.5. –A*** for reference.
3. Secure the return and supply cover to front bracket with screws.

C. INSTALLATION OF THE UNIT

C.4.Setting the Unit

C.4.1. Removing Shipping material

There will be three types of shipping material that will need to be removed: The wood board basepan protection underneath, the wooden skid on the top, and the condenser coil protection (on non-louver panel units).

•**Wood Board Basepan Protection** – Remove the screws that attach the metal brackets for each of the forklift fork-entry points, and remove the brackets. This will release the protection boards from underneath, and it may be removed when the unit is lifted.

• **Shipping Screws** – Shipping screws are type #2 square head screws.

Figure C.4.1. – A: Basepan Protection Assembly

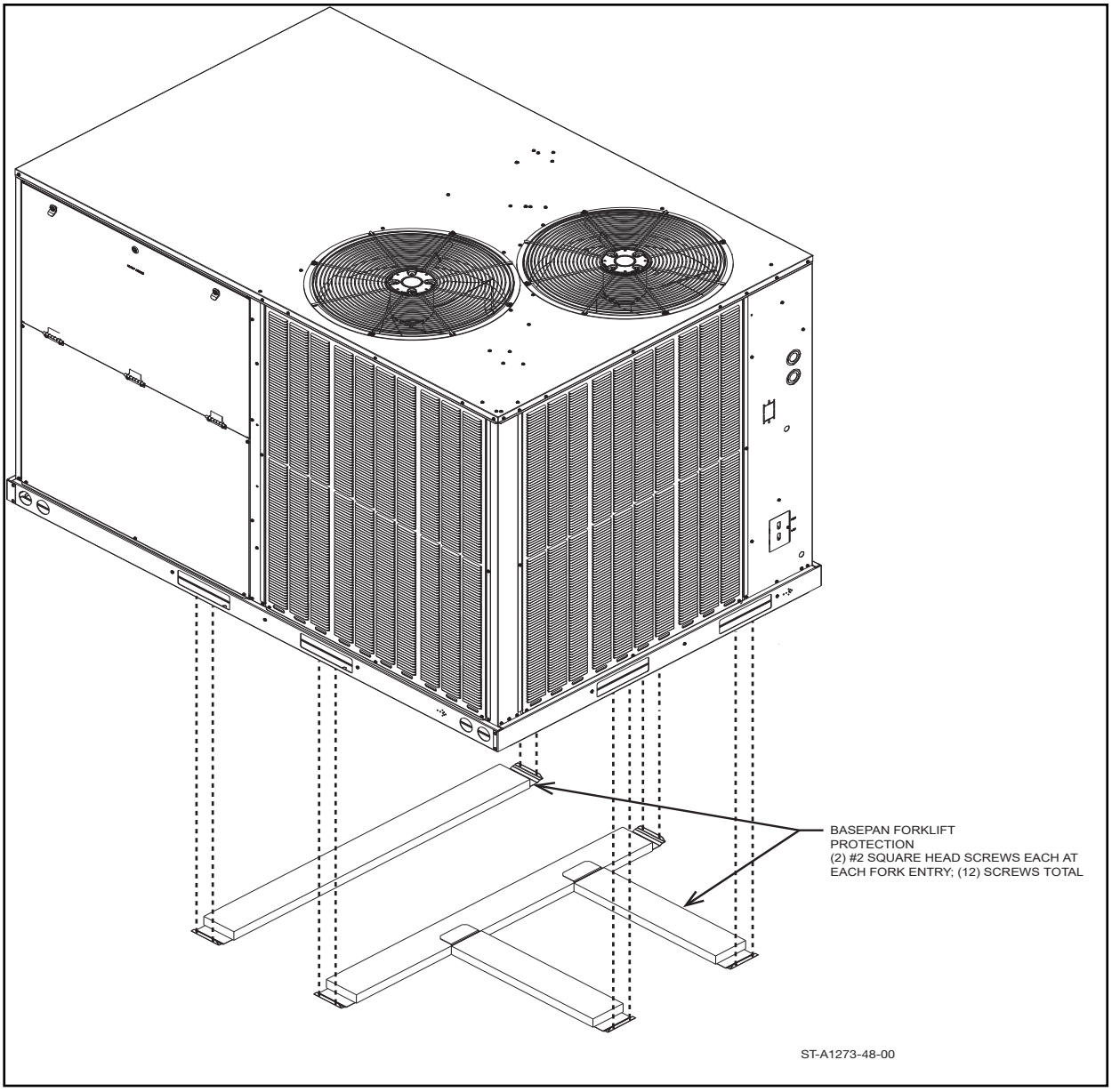

• **Wooden Skid –** Remove the screws from the metal brackets located in the middle along both long sides of the unit. This will detach the two sections of the wooden skid and allow them to be lifted off. If the unit is to be lifted by a crane, it is recommended to leave the top skid on until after the unit is on the roof to provide extra protection if spreader bars are not used.

Figure C.4.1. – A: Wooden Skid Assembly

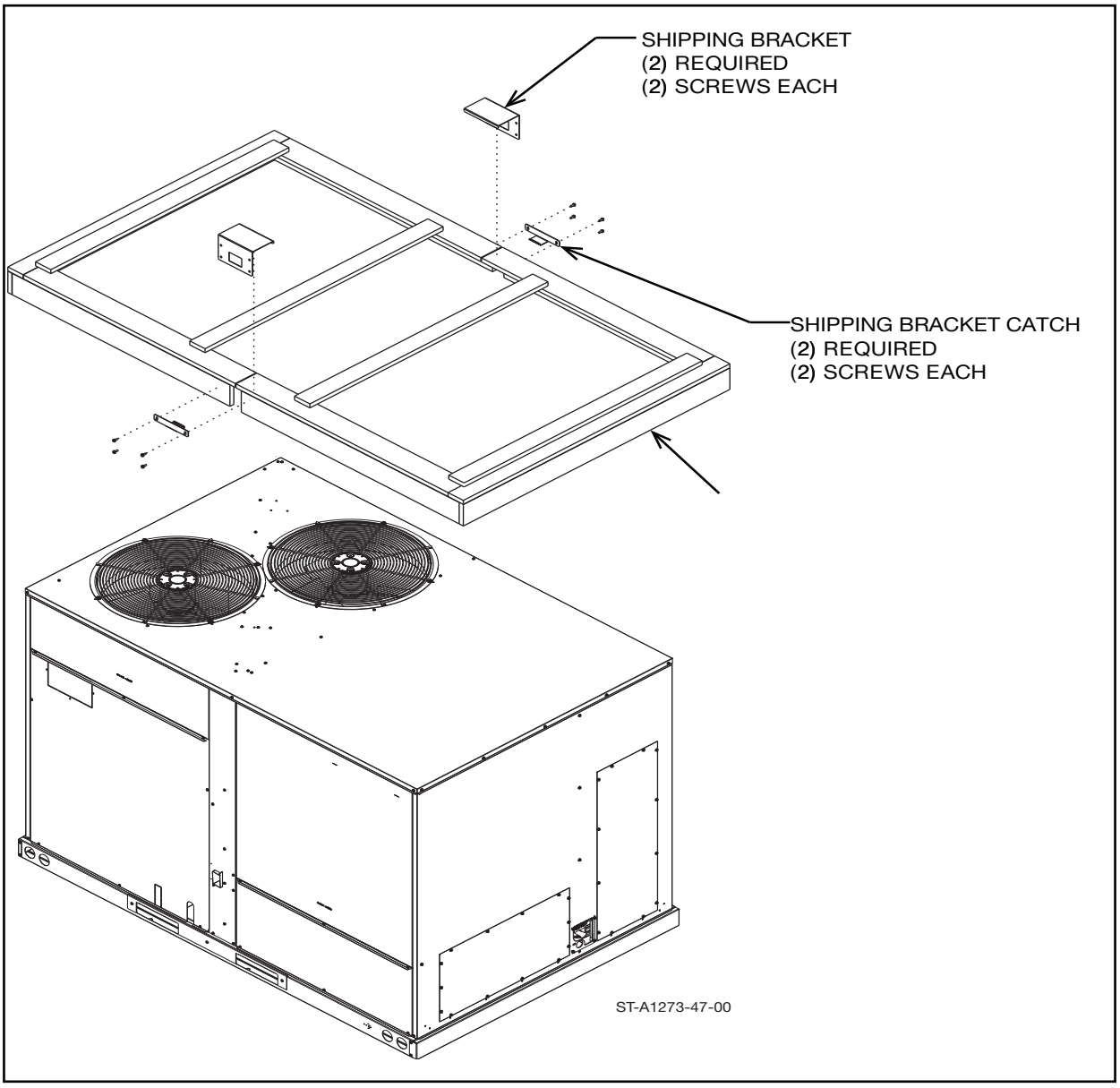

C. INSTALLATION OF THE UNIT

• **Condenser Coil Protection –** Remove the screws along the perimeter of the coil protector. This will allow the protector to be removed. If the unit has louver panels, it will not have the condenser coil protection.

Figure C.4.1. – C: Condenser Coil Protection Assembly

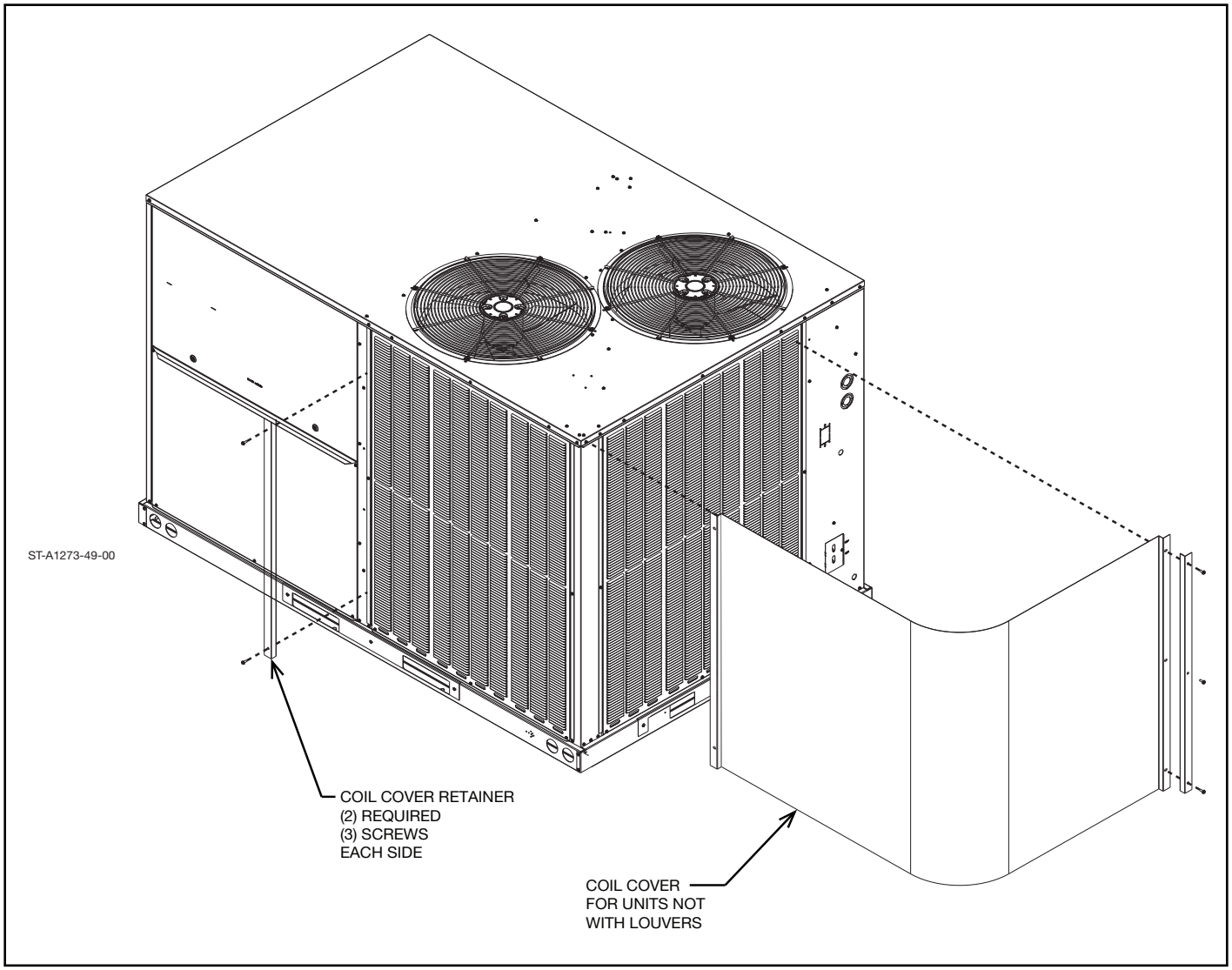

C.4.2. Lifting the Unit

Figure C.4.2. – A : Lifting Detail

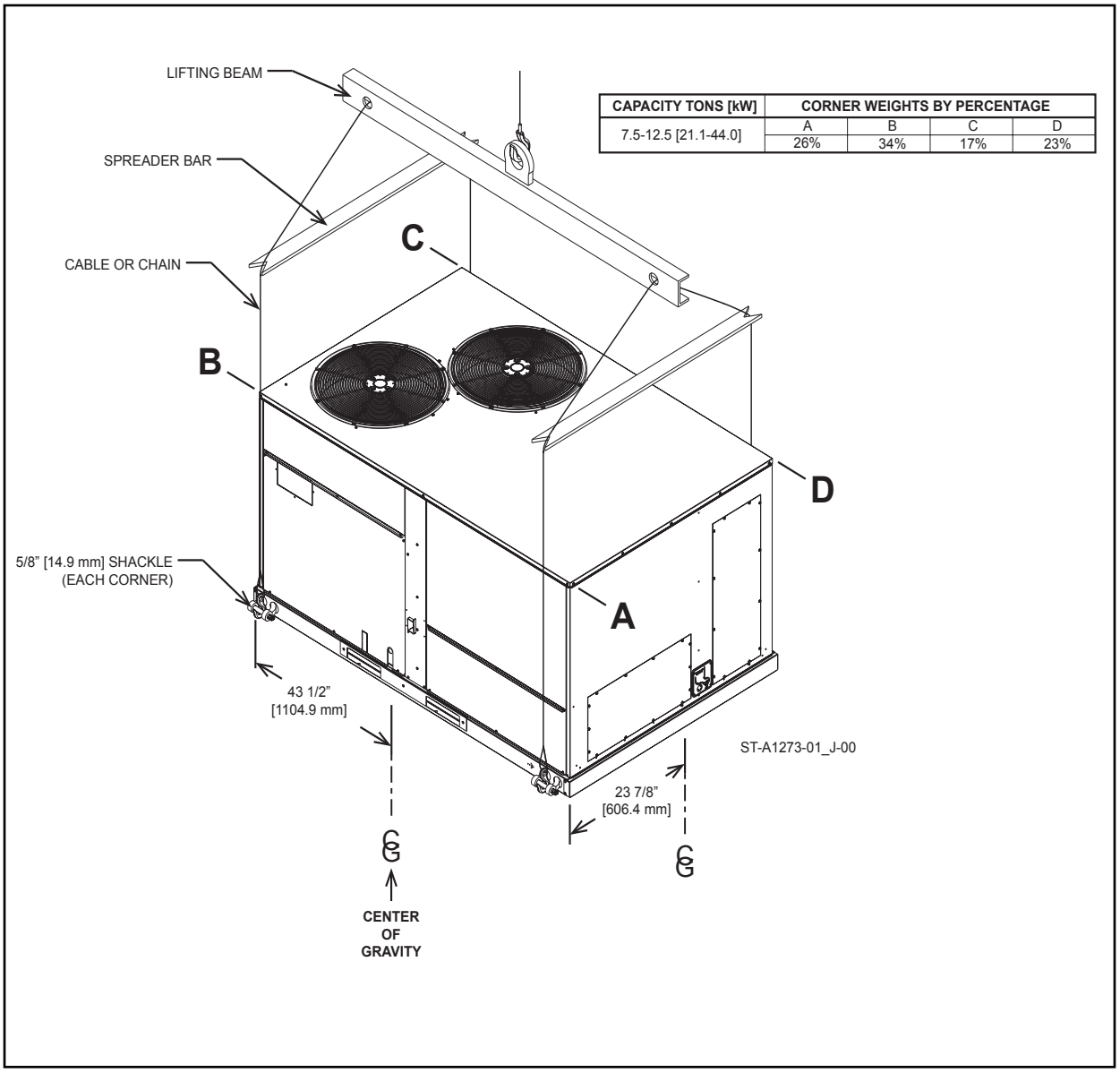

CAPACITY TONS [kW]	CORNER WEIGHTS BY PERCENTAGE			
	A	B	C	D
7.5-12.5 [21.1-44.0]	26%	34%	17%	23%

C. INSTALLATION OF THE UNIT

C.4.3. On a Roof Curb

Refer to ***Figure C.3.1. - A*** in section ***C.3.1. "Unit Location: Allowable Clearances and Operational Issues"*** before installing the unit on a roof curb.

Only use manufacturer-approved roofcurb products for the unit.

C.4.3.1. Installing the Roof Curb

Refer to the separate Installation Instructions for installing a roof curb. These instructions are listed under these Manufacturer Part numbers:

- 14" and 21" Roofcurb: 92-107192-07
- Roofcurb Adapter: 92-107192-09

C.4.3.2. Setting the Unit

Figure C.4.3.2. - A: Setting the unit on Roofcurb Assembly

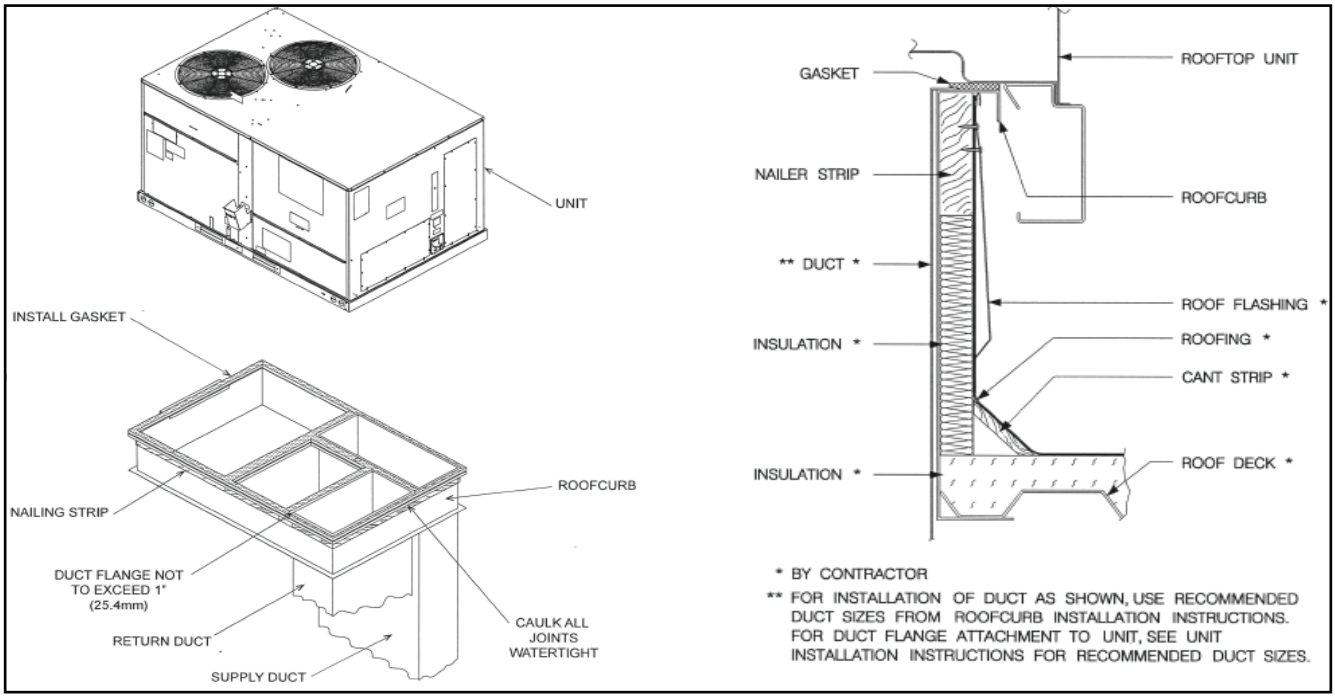

C.4.3.3. High Wind and Seismic Tie-Down Methods

The units must be secured in compliance with ASCE 7-10 and the Florida Building Code 5th Edition. Please refer to ***Appendix J: Unit Tie-Down Methods***.

C.4.4. On a slab

C.4.4.1. Setting the Unit

Set the unit on a stable concrete pad with adequate clearances around the sides of the unit, and make sure the unit is level before securing.

Before setting/securing the unit, use this opportunity to convert the unit from a downflow configuration to a sideflow configuration if necessary. Refer to section ***C.3.5. Cover Panel Installation/Conversion Procedure***.

C.4.4.2. High Wind and Seismic Tie-Down Methods

Slab-installed units must also be secured in compliance with ASCE 7-10 and the Florida Building Code 5th Edition. Please refer to ***Appendix J: Unit Tie-Down Methods***.

C.5. Installing Condensate Drain

IMPORTANT: Install a condensate trap to ensure proper condensate drainage. See ***Figure C.5.1 - A*** for reference.

The condensate drain pan has a threaded female 3/4 inch NPT (11.5 TPI) connection. Drain line must be no smaller than drain pan outlet and adequately sized to accommodate the condensate discharge from the unit. Drain line must be routed to an acceptable drain or outdoors in accordance with local codes. Consult local codes or ordinances for specific requirements of condensate drain piping and disposal.

DO NOT connect condensate drain line to a closed sewer pipe.

C.5.1. Determine Drain Trap Height Requirement

The drain line should be a minimum of 3 inches deep, plus 1 inch for every inch of external static pressure from the blower and duct system. For Example, if the external duct static is 1 inch of water column, the drain trap from the bottom of the trap to the bottom of the drain outlet should be 4 inches, the drain outlet should be 3 inches below the drain connection on the condensate pan. Ensure the outlet of the trap is routed to a suitable drain location as required by local code. See ***Figure C.5.1 - A*** for reference.

Figure C.5.1 – A: Condensate Drain Tap

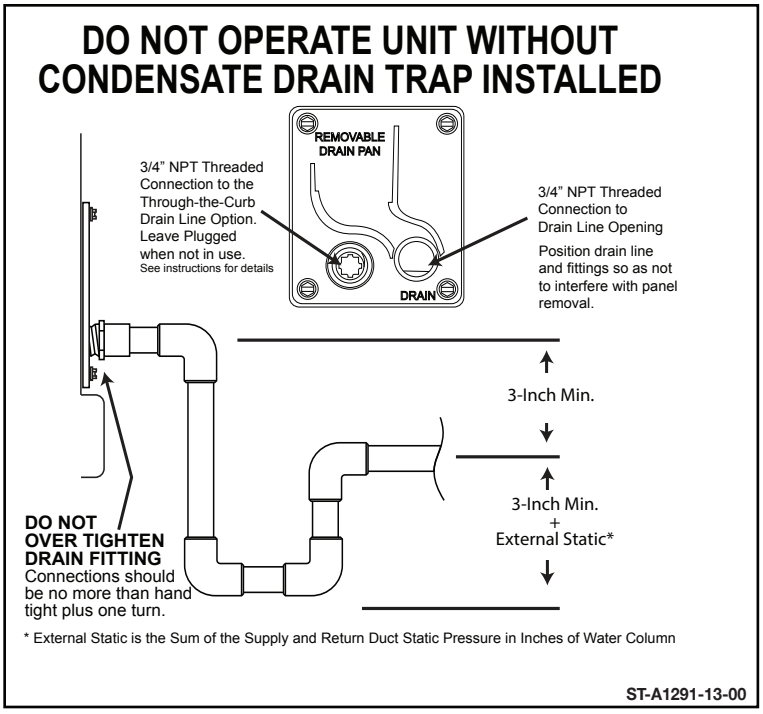

C.5.2. Keeping the condensate drain pan serviceable

To use the removable drain pan feature of this unit, some of the condensate line joints should assembled for easy removal and cleaning. Drain line **MUST NOT** block service access panels.

C.5.3. Connecting the Drain trap

- Use a thin layer of Teflon tape or paste on drain pan connections and install only hand tight.
- Do not over tighten drain pan connections as damage to the drain pan may occur.
- Drain line must be routed to an acceptable drain or outdoors in accordance with local codes.
- Drain line should slope away from unit a minimum of 1/8" per foot to ensure proper drainage.

C.5.4. Connecting the Drain to the through the curb option

The through the curb drain option is available for installations in freezing conditions or that do not want water draining on the roof. Use adapters and elbows to turn out of the drain opening on the right and into the curb drain opening on the left. Under the unit connect a ¾" male treaded fitting, use thread sealant, into the opening between the supply and return duct openings under the unit. Install a properly sized drain trap in the conditioned space of the building and route to a suitable drain location as code requires.

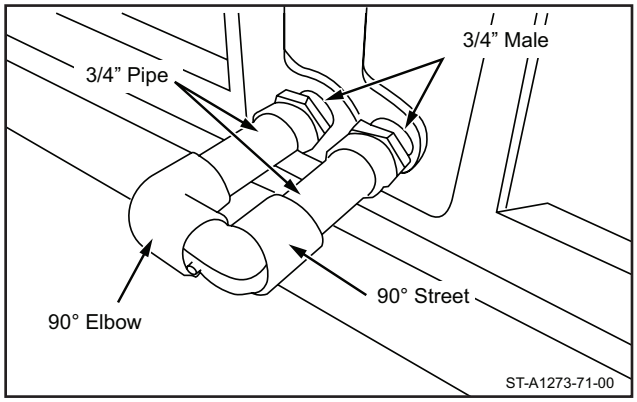

C. INSTALLATION OF THE UNIT

C.5.5. Freezing Condition considerations

- Drain line may need insulation or freeze protection in certain applications.
- Drain line should slope away from unit a minimum of 1/8" per foot to ensure proper drainage.

C.6. Final Installation Inspection

C.6.1. Remove Shipping Material

Before the unit is secured to the slab/roofcurb, check that all shipping material has been removed. See section ***C.4.1.*** for how to remove shipping material.

NOTE: Failure to remove the condenser coil protector on non-louver panel units will negatively impact performance and be harmful to system components. Failure to remove the cardboard basepan protector will block all indoor airflow for downflow configurations.

Open all compartments to ensure there are no tools or other misc parts remaining in the unit from setup. This is most important on the blower section to avoid damage to the blower assembly.

C.6.2. Checking Level and Slope

This unit must be mounted level in both directions to allow water to properly drain from the condenser section and condensate pan.

C.6.3. Condensation and Sweating

In certain regions or climates, portions of the exterior of the unit may condensate or sweat during cooling operation. This is normal and expected.

C.6.4. Install Flue Hood for Gas Heat

These gas heat package units are shipped with the flue hood fastened onto the condenser basepan in the compressor access section.

Remove the flue hood from the basepan, and install it over the flue opening on the outside of the unit before operating.

D. DUCT AND VENTING

D.1. Air Flow and Static Pressure

See ***Appendix C*** towards the end of this manual for Air Flow Performance Data. For Air Flow adjustment and set up, see section ***J.3. "Checking and Adjusting Air Flow".***

D.2. Duct Requirements and Best Practices

The installing contractor should fabricate ductwork in accordance with local codes.

Use industry manuals as a guide when sizing and designing the duct system.

Contact Air Conditioning Contractors of America, 1513 16th St. N.W., Washington, D.C. 20036.

⚠**WARNING: DO NOT**, under any circumstances, connect return ductwork to any other heat producing device such as fireplace insert, stove, etc. Unauthorized use of such devices may result in fire, carbon monoxide poisoning, explosion, personal injury, property damage or death.

Place the unit as close to the conditioned space as possible allowing clearances as indicated. Run ducts as directly as possible to supply and return outlets. Use of non-flammable weatherproof flexible connectors on both supply and return connections at unit to reduce noise transmission is recommended.

On ductwork exposed to outside temperature and humidity, use a minimum of 2" of insulation and a vapor barrier. Distribution system in attic, furred space or crawl space should be insulated with at least 2" of insulation. Half-inch to 1" thick insulation is usually sufficient for ductwork inside the air conditioned space.

Provide balancing dampers for each branch duct in the supply system.

Properly support ductwork from the structure.

IMPORTANT: In the event that the return air ducts must be run through an "unconfined" space containing other fuel burning equipment, it is imperative that the user/homeowner must be informed against future changes in construction which might change this to a "confined space." Also, caution the user/homeowner against any future installation of additional equipment (such as power ventilators, clothes dryers, etc.), within the existing unconfined and/or confined space which might create a negative pressure within the vicinity of other solid, liquid, or gas fueled appliances.

D. DUCT AND VENTING

D.2.1. Supply Duct Systems

A properly designed supply duct system, meeting all local codes and best practices, must be installed to ensure proper air flow and minimize the static pressure on the blower.

The supply duct opening for roof curb installations is 28 3/4" x 14 1/4", the supply duct opening for horizontal ducted installations is 28 3/8" x 13 7/8". ***See Figure B.3.6. – A and B*** for reference.

D.2.2. Return Duct Systems

A properly designed return duct system, meeting all local codes and best practices, must be installed to ensure proper air flow and minimize the static pressure on the blower.

The return duct opening for roof curb installations is 36 5/8" x 12 7/8", the return duct opening for horizontal ducted installations is 36 3/8" x 12 5/8". ***See Figure B.3.6. – A and – B*** for reference

D.2.3. Isolation for Noise abatement

Noise from operational vibration can occur with this equipment, the use of flexible duct adapters and vibration damping curb adapters maybe required depending upon the building type and use. Consult with a local mechanical engineer on the duct and building design to determine if any noise abatement solutions need to be considered before installation.

D.3. Filters

D.3.1. Installing Filters

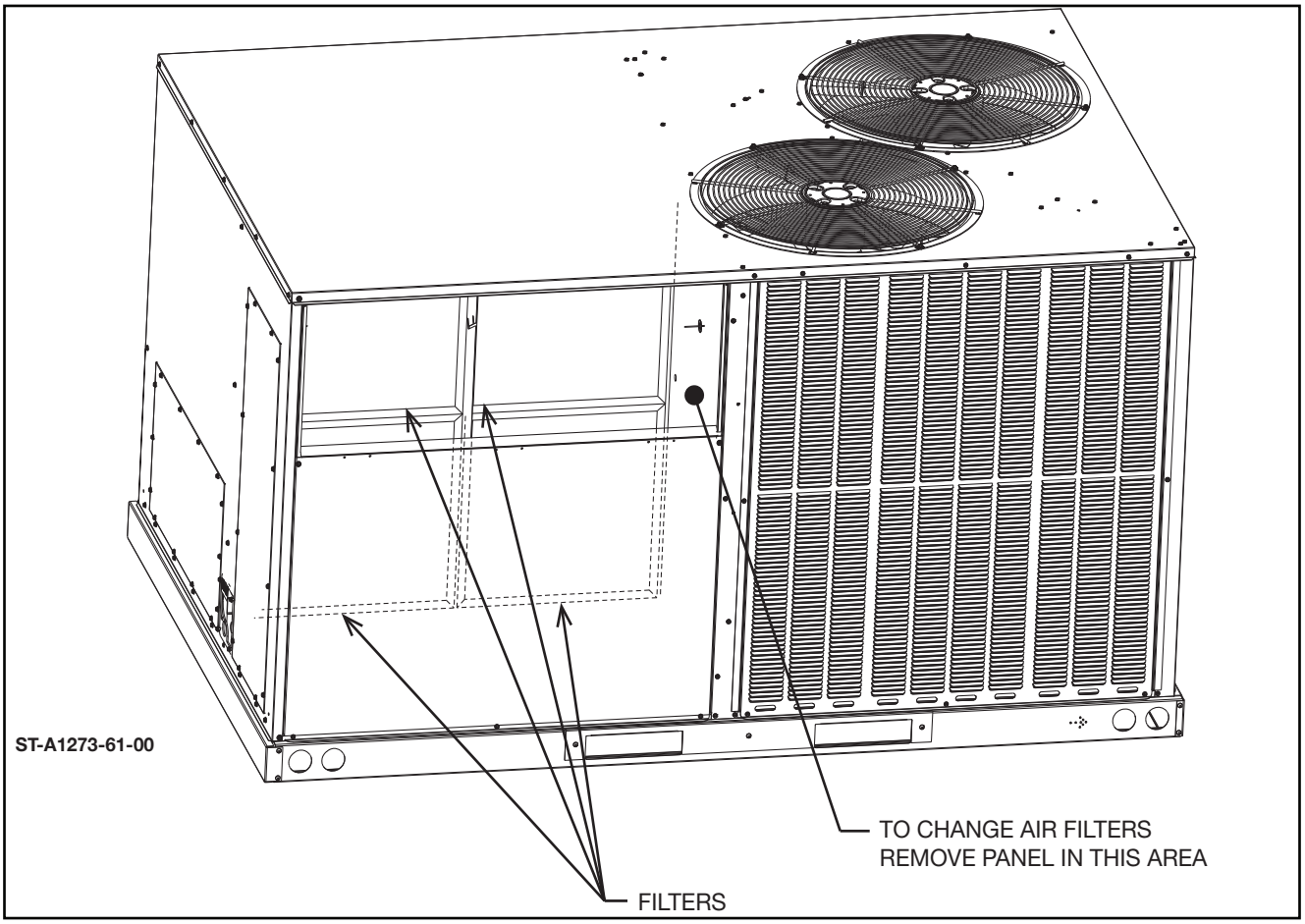

D. DUCT AND VENTING

D.3. Filters

D.3.1. Installing Filters (Cont.)

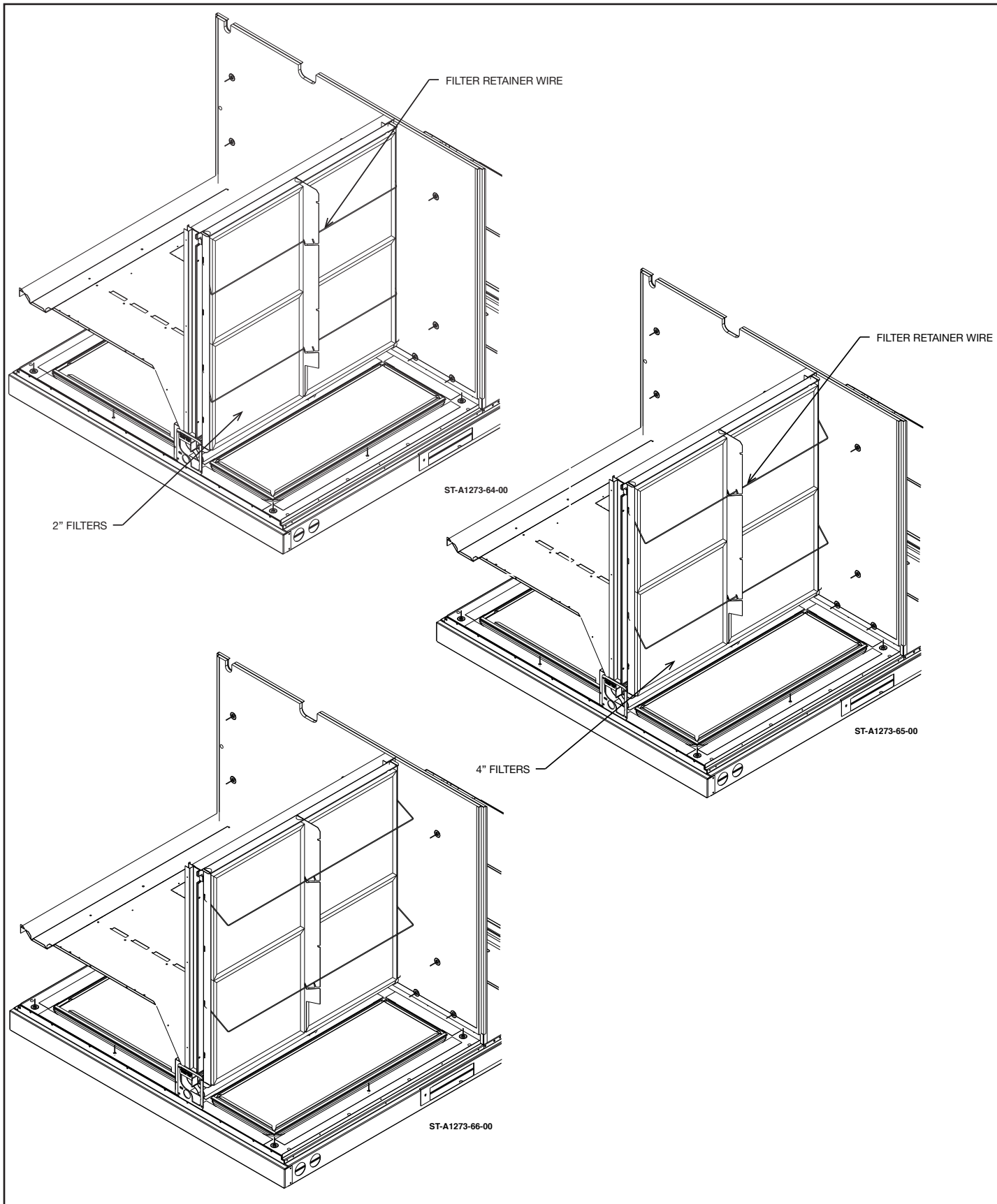

This product will accept both 2” and 4” filters. A new unit ships with four 2” x 20” x 20” filters. For units with an economizer, only use 2” filters due to fitment clearances. To replace filters, follow these steps:

1. Remove “Filter Access” panel.
2. Pull downwards on retainer wire and rotate upwards to unlock filters.
3. Secure retainer wire in notch.
4. Remove and discard current filters.
5. Install new filters with airflow arrow pointing towards evaporator coil.
6. Rotate retainer wire downward to original position and secure in notch.
7. Install “Filter Access” panel.

D.4. Economizers and Fresh Air Dampers

D.4.1. Economizer Information

ECONOMIZERS - Mechanical devices used to make the Heating Ventilation and Air Conditioning (HVAC) unit more efficient by regulating the return air and outside air. Economizers for this product come in several configurations.

The Downflow Economizer is designed specifically for units setup in a downflow configuration. The downflow economizer fits inside the package unit and sits over the return-air opening along the bottom of the unit. All economizers are equipped with horizontal gear driven blades and a gravity relief damper (Barometric Relief).

The Horizontal Economizer is designed specifically for units setup in a horizontal flow configuration. The horizontal economizer utilizes independently actuated return-air and fresh air dampers to enable the most efficient handling of air achievable with this platform. The horizontal economizer also includes an externally-mounted (to the duct work) gravity relief damper.

All units with economizers come shipped from the factory with a parts bag and a separate document for Economizer Installation & Operation instructions. Refer to that document for information on how to install the economizer, connect the controls, and adjust the airflow. Accessory economizers purchased separately will also come with the parts bag and instructional document.

For reference, the Installation Instructions for economizers may be found in the parts bag of the unit for factory installed economizers, in the box with the field installed economizer, or on the manufacturer’s website for the product.

Figure D.4.1. – A: Downflow Economizer with Hood

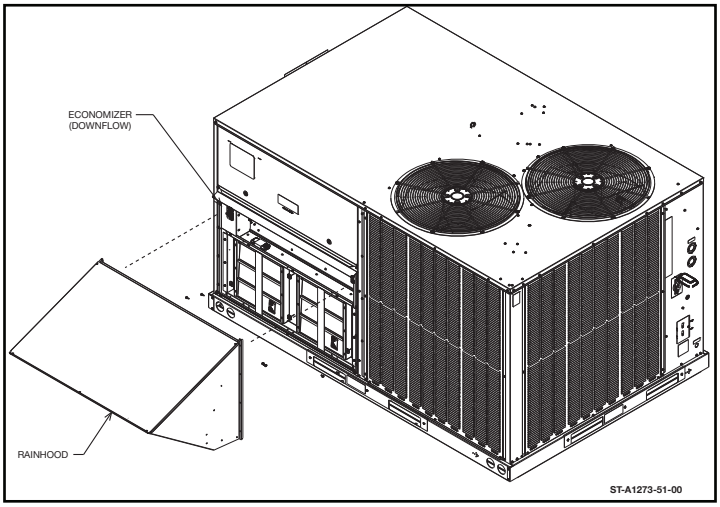

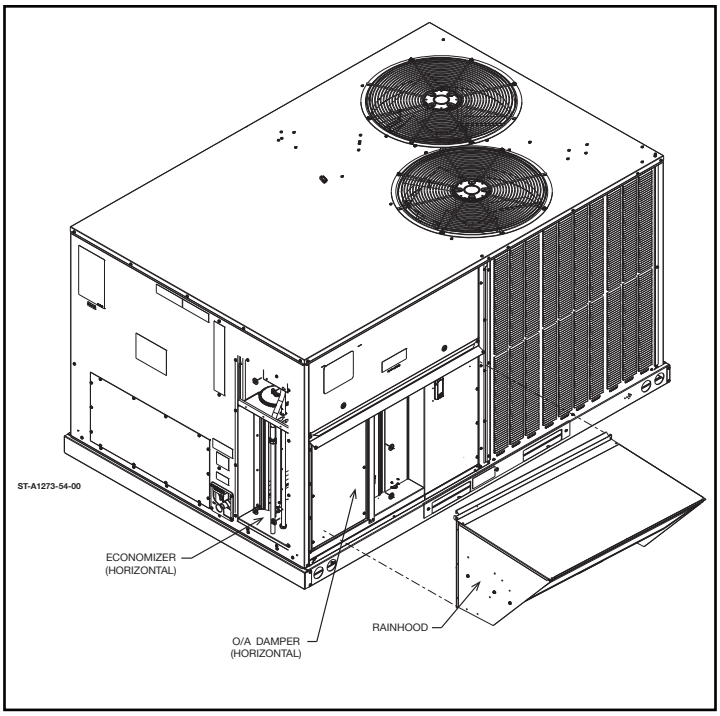

Note: Louver protections are optional.

D. DUCT AND VENTING

D.4.2. Fresh Air Dampers

MANUAL DAMPER HOODS – Manual damper hoods are often installed as a low cost substitute for an economizer.

The idea is to manually set the blade located inside the hood to restrict the opening by introducing Static Pressure, thereby balancing the outside air with the return air entering the RTU.

The drawback to a manual damper is that it is open 24 hours a day, 365 days a year. Therefore they introduce outside air during occupied and unoccupied modes increasing the load on the rooftop unit.

MOTORIZED DAMPER HOODS – A motorized damper is economical, and provides more comfort than a manually adjusted hood damper.

The motorized damper is coupled to an actuator, and designed to open when the RTU fan is running, and close when the fan is off. The advantage of the motorized damper is that the outside air is no longer a factor once the RTU fan is cycled off.

By connecting a Timer, CO2 Sensor or Smoke Detector in series between the RTU fan ("G" on the Thermostat) and actuator, the damper can be controlled during "Unoccupied" hours, or allow the damper to only introduce outside air during "On-Demand Occupancy."

Fresh Air Dampers come shipped with a separate document for Installation & Operation instructions. Refer to that document for information on how to install and adjust the dampers.

For reference, the Installation Instructions for Fresh Air Dampers may be found in the parts bag for the factory installed dampers, in the box for field installed dampers, or on the manufacturer's website for the product.

Figure D.4.2. – A: Fresh Air Damper

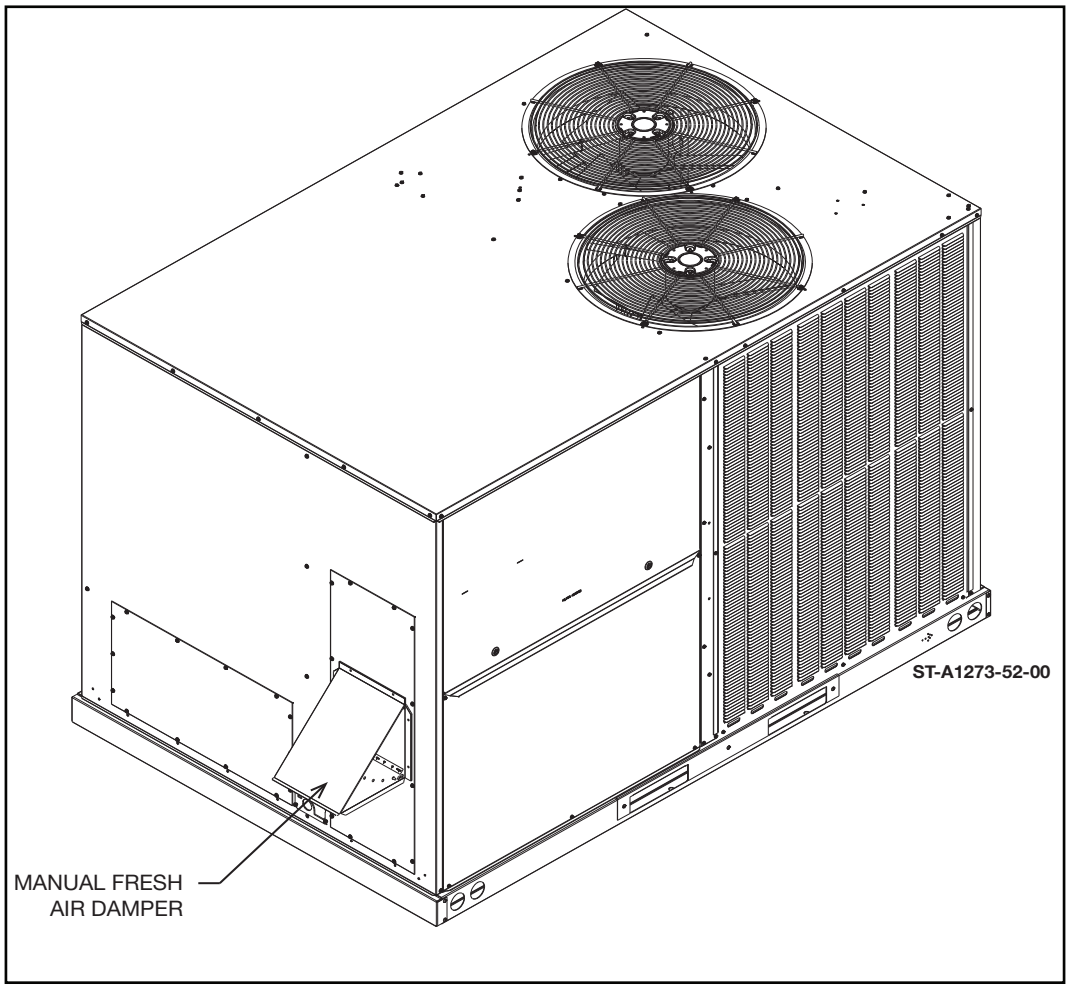

D.4.3. Powered Exhaust

POWER EXHAUST - This accessory is a motorized fan designed to remove air from the conditioned space efficiently. While this is useful for removing a high positive pressurization, caution must be taken in the setup of the system to avoid creating a negative pressure within the conditioned space. If negative pressure occurs, leaky windows, doors, and electrical fixtures will allow the outside air to creep in causing drafts or hot sports within a room.

Figure D.4.3. – A: Powered Exhaust

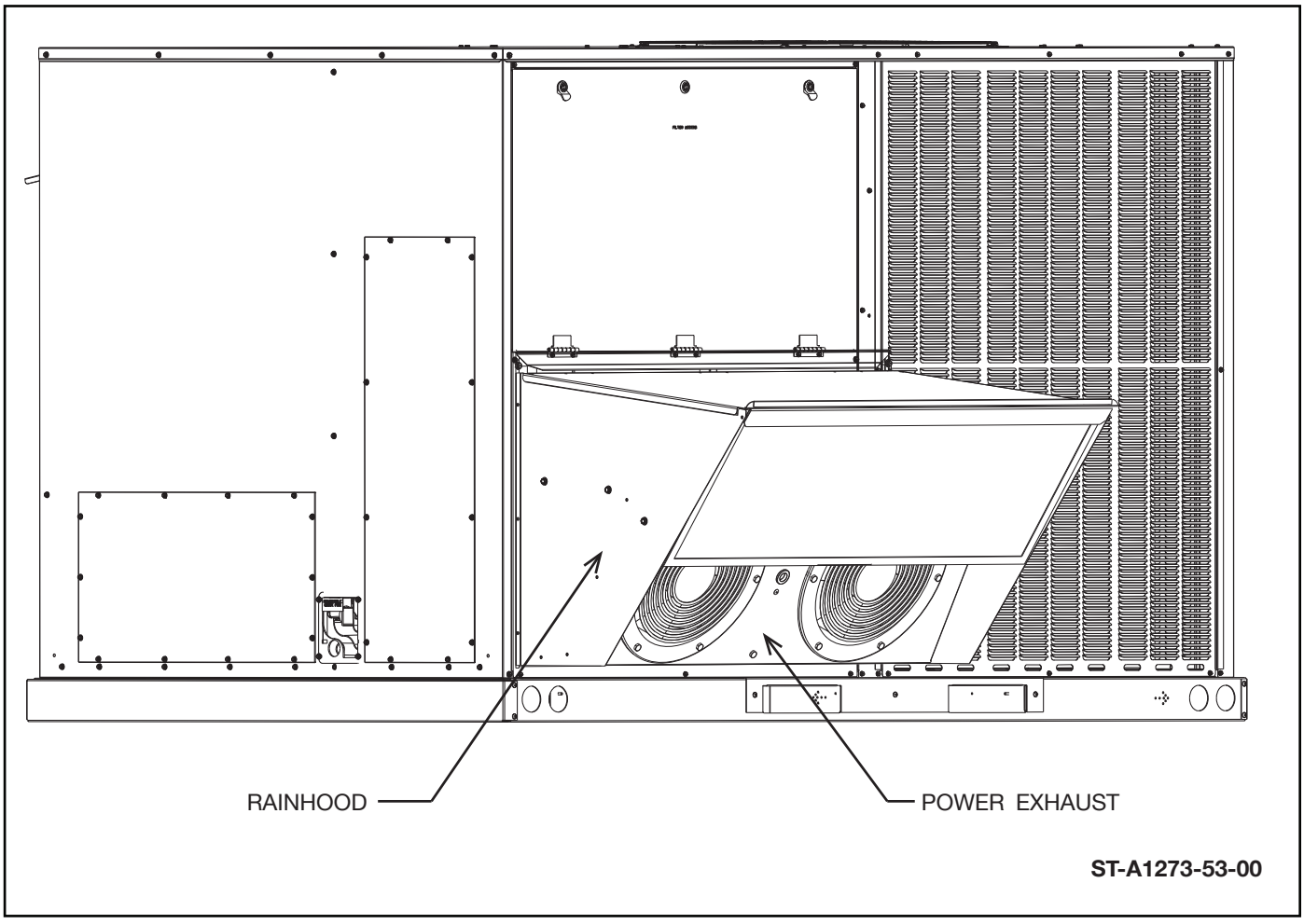

D. DUCT AND VENTING

D.5. Smoke Detectors

Figure D.5. – A: Smoke Detector Assembly

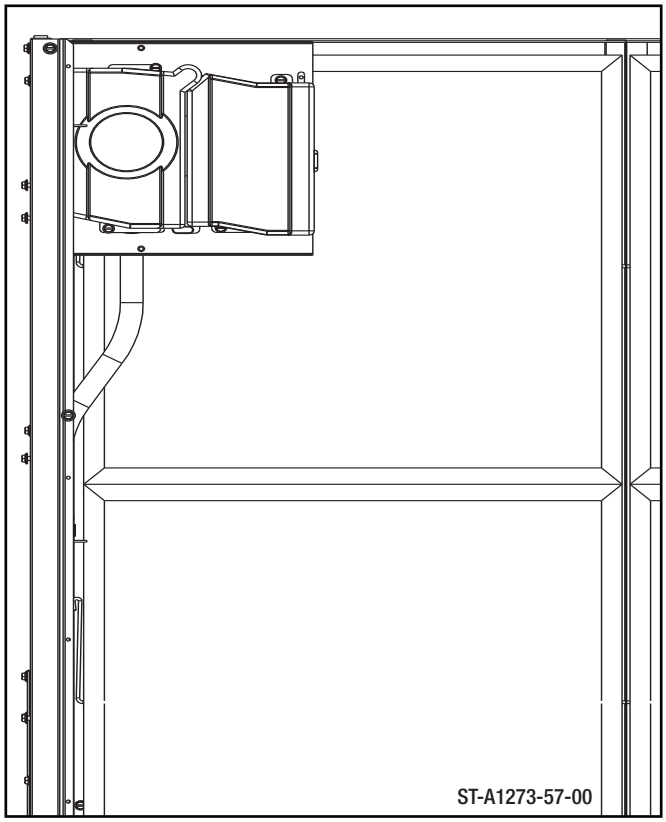

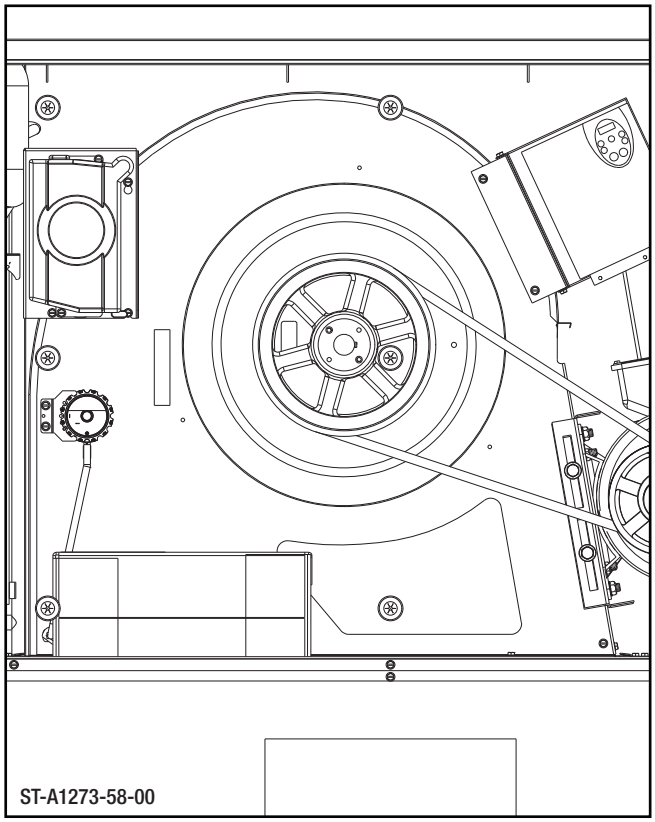

D.5.1. Supply Duct Smoke Detectors

D.5.1.1. Field Installed – Installation, Wiring and setup

Field install Supply and Return Duct Smoke Detectors come shipped with a separate document for Installation & Operation instructions. Refer to the separate Installation Instructions for installing, wiring, and setup of a supply and return smoke detector. These instructions are listed under ***Manufacturer Part number: 92-106191-03.***

D.5.1.2. Factory Installed – Inspection and setup

Inspect the smoke detector assembly for any damage during shipping. Use ***Figure D.5. – A*** for reference. Confirm that all wiring connections are still secure. Refer to the separate Installation Instructions, ***Manufacturer Part Number 92-106191-03***, for smoke detector for wiring diagrams and additional assembly instructions.

D.5.1.3. Field Installed 3rd Party Smoke Detectors or Fire Control Panels

See ***section F.1.2.*** for the proper connection points for a remote smoke detector. DO NOT break 24vac to the Thermostat: shutdown will not occur. DO NOT break 24vac from the transformer: it can overload the smoke detector controls.

E.1. Electrical Safety Information

E.1.1. Information on Power Supply

⚠WARNING: Turn off the main electrical power at the branch circuit disconnect closest to the unit before attempting any wiring. Failure to do so can cause electrical shock resulting in personal injury or death.

1. All wiring should be made in accordance with the **National Electrical Code**. Consult the local power company to determine the availability of sufficient power to operate the unit. Check the voltage at power supply to make sure it corresponds to the unit's RATED VOLTAGE REQUIREMENT. Install a branch circuit disconnect near the rooftop, in accordance with the N.E.C., C.E.C. or local codes.

2. It is important that proper electrical power is available at the unit. Voltage should not vary more than 10% from that stamped on the unit nameplate. On **three phase units**, phases must be balanced within 3%.

3. For branch circuit wiring (main power supply to unit disconnect), the minimum wire size for the length of run can be determined from the **N.E.C.** using the circuit ampacity found on the unit rating plate. Use the smallest wire size allowable in ***Figure F. – A*** from the unit disconnect to unit.

4. For through the base wiring entry reference ***Figure F.2. – A: Power and Control Routing***. All fittings and conduit are field supplied for this application. Reference the chart with ***Figure F.2. – B: Hole Sizing for Conduit*** for proper hole and conduit size.

NOTES:

1. For branch circuit wiring (main power supply to unit disconnect), the minimum wire size for the length of run can be determined from ***Appendix B "Electrical Data"*** or the unit rating plate for circuit ampacity and the National Electrical Code to determine proper wire sizing. From the unit disconnect to unit, the smallest wire size allowable in ***Figure F. – A*** for the circuit ampacity may be used, as the disconnect must be in sight of the unit.

2. Wire size based on 75°C rated wire insulation for 1% voltage drop.

3. For more than 3 conductors in a raceway or cable, see the National Electrical Code (or C.E.C. in Canada) for derating the ampacity of each conductor.

IMPORTANT: This unit is approved for use with copper conductors only connected to unit contactor.

WARRANTY MAY BE JEOPARDIZED IF ALUMINUM WIRE IS CONNECTED TO UNIT CONTACTOR.

E. ELECTRICAL

Special instructions apply for power wiring with aluminum conductors:

Warranty is void if connections are not made per instructions.

Attach a length (6” or more) of recommended size copper wire to the unit contactor terminals L1, L2 and L3 for three phase.

Select the equivalent aluminum wire size from the tabulation below:

Splice copper wire pigtails to aluminum wire with U.L. recognized connectors for copper-aluminum splices. Please exercise the following instructions very carefully to obtain a positive and lasting connection:

1. Strip insulation from aluminum conductor.

2. Coat the stripped end of the aluminum wire with the recommended inhibitor, and wire brush the aluminum surface through inhibitor. INHIBITORS: Brundy-Pentex “A”; Alcoa-No. 2EJC; T & B-KPOR Shield.

3. Clean and recoat aluminum conductor with inhibitor.

4. Make the splice using the above listed wire nuts or split bolt connectors.

5. Coat the entire connection with inhibitor and wrap with electrical insulating tape.

NOTE: Wiring to be done in the field between the unit and devices not attached to the unit, or between separate devices which are field installed and located, shall conform with the temperature limitation for Type T wire [63°F rise (35°C)] when installed in accordance with the manufacturer’s instructions.

E.1.2. 208/240 Volt Operation and Required Adjustments

E.1.2.1.Low Voltage Transformer Tap Adjustment for 208Volt

Transformer is factory wired for 230 volts on 208-230 volt models and must be changed for 208 volt applications. See unit wiring diagram for 208 volt wiring.

E.2. Electrical Data

See ***Appendix B*** towards the end of this manual for Electric Data.

E.3. Electrical Connections

Figure E.3. – A: Typical Thermostat Wiring

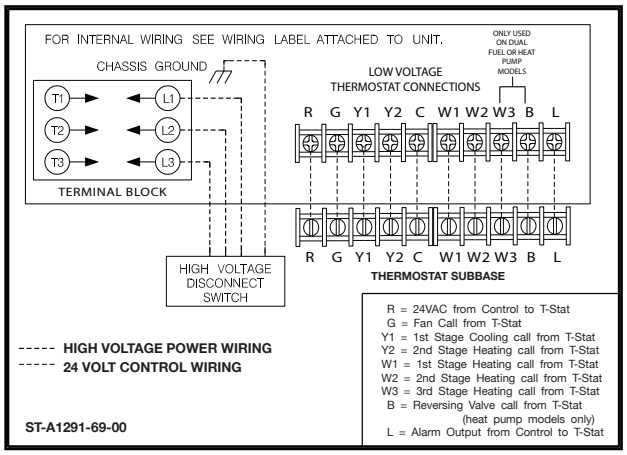

Use to ***Appendix B*** "Electrical Data" and National Electrical Code for circuit ampacity to determine proper wire sizing.

Refer to ***Figure F.2. – A: Power and Control Routing*** for location of wiring entrances, and ***Figure F.2. – B: Hole Sizing for Conduit.***

E.3.1. Field Supplied Disconnect

The field supplied service disconnect will come with a separate Installation Instruction document. Please refer to that document, or Manufacturer part number: ***92-106191-01***.

E.3.1.1. Mounting Disconnect on Cabinet

Attach the disconnect to the top of the left hand side of the control box, above the knockouts and refridgerant test ports. Do not use screws above or below the label specifying "TO PREVENT COIL DAMAGE – DO NOT ADD SCREWS HERE, ABOVE, OR BELOW LABEL" as hidden coil and tubing could be damaged. An example of this label is shown below.

Figure E.3.1.1. – A: Standard Location for Mounting Disconnect

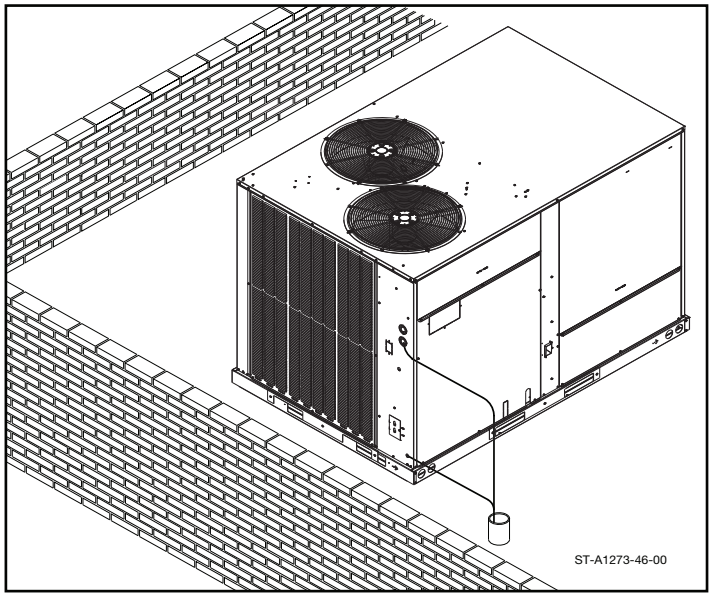

Figure E.3.1.1. – B: Label Showing Where to NOT Use Screws



E.3.1.2. Routing Wires into Cabinet

See ***Figure F.2. – A: Electrical and Piping Routing*** for conduit entry points and routing locations for wiring into the control box.

See ***Figure E.3. – A: Typical Thermostat Wiring*** for wiring to the contactor and thermostat in the control box.

E.3.1.3. Routing Wires through Curb (Option)

Use liquid tight connectors and tubing to connect the electrical and low voltage control cables between the base of the cabinet at the raised section (See ***Figure B.3.6. - A: Supply And Return Dimensions For Downflow Applications*** for location of raised section) and bottom of the control panel. Conduit and fittings must meet all applicable codes.

Use Silicon and gaskets to seal the connection at the base pan

E.3.1.4. Connecting to Contactor terminal blocks

The recommended torque for securing wiring to the contactor is **40 in-lb**.

See ***Figure E.3. – A: Typical Thermostat Wiring*** for wiring to the contactor.

E.3.2. Factory Installed Disconnect

Refer to ***Appendix G*** for the unit wiring diagrams, and to ***Figure F.2. – A*** for locations to route wires into the cabinent or through the curb/basepan of the unit.

E.3.2.1. Routing Wires into Cabinet

Refer to section ***E.3.1.1.*** and/or section ***F.2.*** for routing wires into the cabinet with a factory installed disconnect.

E.3.2.2. Routing wires through Curb (Option)

Refer to section ***E.3.1.3.*** for routing wires through the curb with a factory installed disconnect.

E.3.3. Connecting the Convenience Outlet

E.3.3.1. Non-powered

The non-powered convenience outlet, if purchased as an option for the unit, will come shipped in a box within the blower compartment of the unit. It will need to be removed and installed into its proper configuration.

For connecting the non-powered convenience outlet and all other information, refer to the installation instructions for the accessory.

Manufacturer I&O part number: 92-42576-03

E.3.4. Checking Phase and Motor Rotation

When using 3 phase power the only device that is rotation dependent is the compressor. The outdoor fan and indoor blower do not require any adjustment and will turn backwards if the phase is incorrect. Verify the direction of rotation for the indoor blower motor before starting up the compressors.

E.3.4.1. Checking Phase with VFD Drive

On any models with an ECM Direct Drive Blower Motor or belt drive units with a Variable Frequency Drive, VFD, the motor will always rotate in the correct direction.

Correction phase must be checked by the operation of the compressor.

E.3.5. Grounding Requirements

Refer to local codes as required. Must be grounded to a common earth ground.

National Electric Code (NEC) / International Building Code / Canadian Electrical Code

A diagram of the internal wiring of this unit is located on the inside of control access panel and in this manual. If any of original wire as supplied with the appliance must be replaced, the wire gauge and insulation must be same as original wiring.

The low voltage wiring should be sized as shown in ***Figure F. – A: Field Wire Size for 24v Thermostat Circuits***.

F. CONTROL / THERMOSTAT WIRING

Figure F. - A

FIELD WIRE SIZE FOR 24 VOLT THERMOSTAT CIRCUITS							
THERMOSTAT LOAD - AMPS		SOLID COPPER WIRE - AWG.					
	3.0	16	14	12	10	10	10
	2.5	16	14	12	12	12	10
	2.0	16	16	14	12	12	10
		50	100	150	200	250	300
		LENGTH OD RUN - FEET (1)					

ST-A1291-14-00

(1) THE TOTAL WIRE LENGTH IS THE DISTANCE FROM THE FURNACE TO THE THERMOSTAT AND BACK TO THE FURNACE.

NOTE: DO NOT USE CONTROL WIRING SMALLER THAN NO. 18 AWG.

Install the room thermostat in accordance with the instruction sheet packed in the box with the thermostat. Run the thermostat lead wires through the control entry opening ***(Figure F.2. – A: Electrical and Piping Routing)*** and connect to the low voltage thermostat connections (see ***Appendix G*** for wiring diagrams and ***Section F.1.*** for T-Stat field connections). Never install the thermostat on an outside wall or where it will be influenced by drafts, concealed hot or cold water pipes or ducts, lighting fixtures, radiation from fireplace, sun rays, lamps, televisions, radios or air streams from registers. Refer to instructions packed with the thermostat for "heater" selection or adjustment.

F.1. T-Stat field connections

F.1.1. Misc. Connections

Refer to ***Appendix G*** for the unit wiring diagrams and to ***Figure E.3. – A: Typical Thermostat Wiring.***

Figure F.1.1. - A: Core Command Terminal Locations

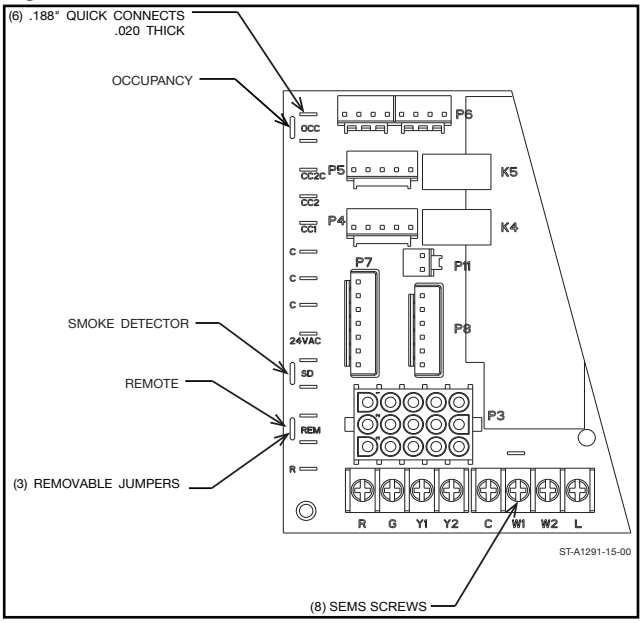

F.1.2. Occupancy connections / Remote connections / Etc

Figure F.1.2. – A: Occupancy and Remote Connections

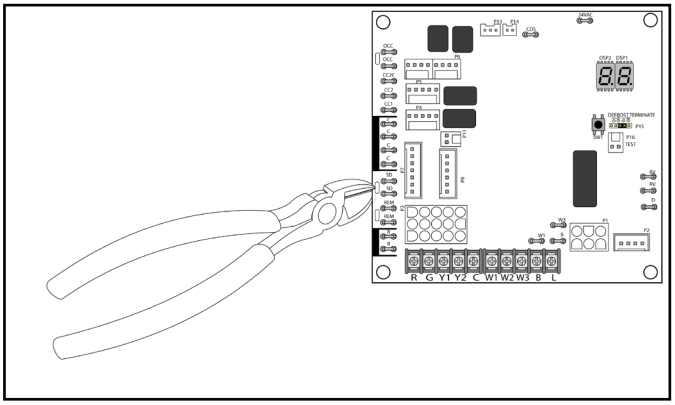

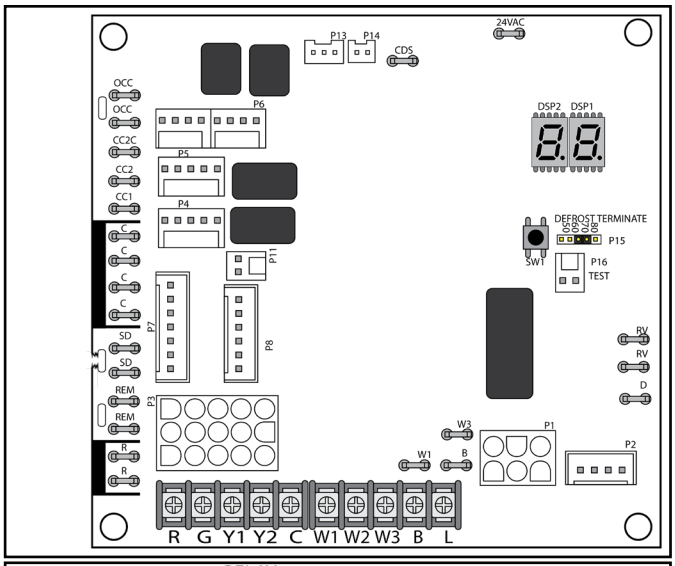

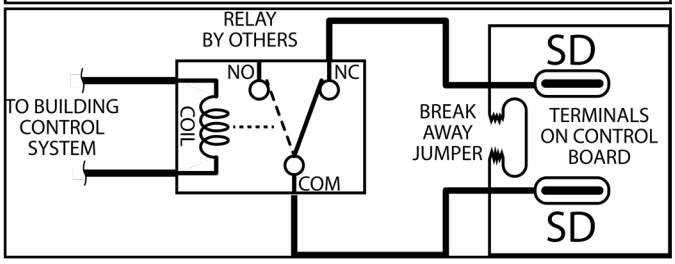

NOTE: This is an example of breaking the jumper for Smoke Detector connections, apply the same process for the Occupancy and/or Remote connections.

These features are only available on the Non-DDC Furnace, Heat pump, or cooling only control boards.

OCC – Occupancy Control. This feature shuts down the dampers on the economizer or motorized damper option when outdoor/fresh air is not required for the building. Locate the terminals at the left side of the board mark "OCC". See Figure ***F.1.2. – A: Occupancy and Remote Connetions*** for reference.

F. CONTROL / THERMOSTAT WIRING

F.1.2. Occupancy connections / Remote connections / Etc (Cont.)

For connecting Remote Smoke Detectors or Fire Control Panels to this control DO NOT break the 24VAC to the thermostat or from the power supply transformer. Either could cause an undersirable operating condition that would not shut the unit down in the event of an emergency situation. See the instructions for the type of control board this unit is equipped with.

Using cutters or a small screw driver, break the edge of the board between the to terminals marked with “OCC”. Use 3/16” blade connector, and a minimum of 18AWG wire to connect to a Normally Closed Dry Contact Relay or Switch. Do not connect multiple control boards to the same dry contact relay or switch.

REM – Remote Shutdown Control. This feature allows the unit to be turned off remotely ignoring the thermostat calls for cooling or heat. Locate the terminals at the left side of the board mark “REM”. See Figure ***F.1.2. – A: Occupancy and Remote Connetions*** for reference.

Using cutters or a small screw driver, break the edge of the board between the to terminals marked with “REM”. Use 3/16” blade connector, and a minimum of 18AWG wire to connect to a Normally Closed Dry Contact Relay or Switch. Do not connect multiple control boards to the same dry contact relay or switch.

F.1.3. Connecting a Smoke Detector

F.1.3.1. Core Command Connection

SD – Remote Smoke Detection. This feature allows for the proper shutdown of the controls in the event of an emergency situation. Locate the terminals at the left side of the board mark “SD”. See ***Figure F.1.2. – A: Occupancy and Remote Connetions*** for reference.

Using cutters or a small screw driver, break the edge of the board between the to terminals marked with “SD”. Use 3/16” blade connector, and a minimum of 18AWG wire to connect to a Normally Closed Dry Contact Relay, or in common Fire Control Panels and Smoke Detectors, the Auxilary Connections for C and NC. See the instructions for the remote devices. Do not connect multiple control boards to the same dry contact relay.

F.1.3.2. DDC Control Connection

In the air-filter section or on the side economizer, locate the 12-pin Molex jumper plug with the long Red, short Yellow and Orange wire loops; see ***Figure F.1.3.2. - A*** for reference. Cut the Red wire loop and connect these to a minimum of 18AWG wire that will be connected to a Normally Closed Dry Contact Relay, or in common Fire Control Panels and Smoke Detectors, the Auxilary Connections for C and NC. See the instructions for the remote devices. Do not connect multiple control boards to the same dry contact relay.

Figure F.1.5.3. – A: Wiring Harness location in Air-Filter Section

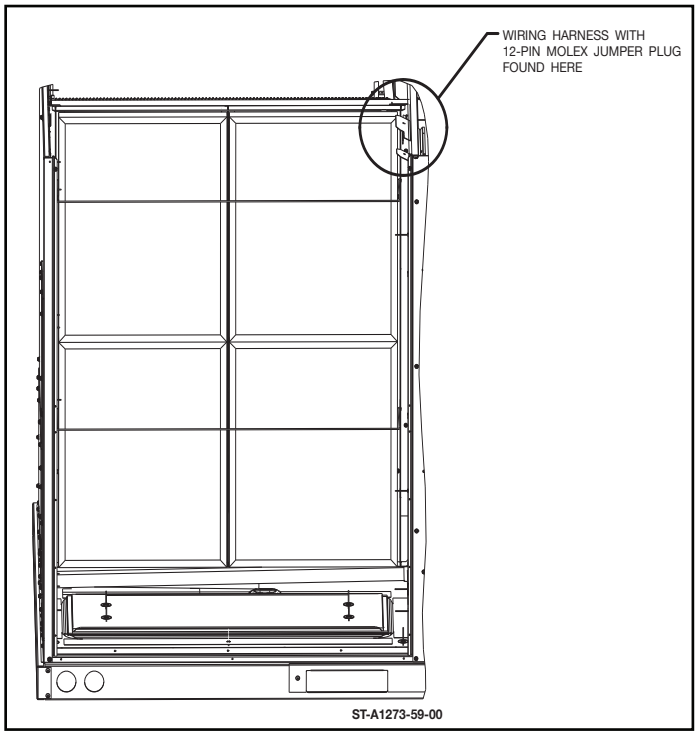

F.1.4. Building Management / Control Connections using DDC –

In an application where a third party building management / controls are in use or will be incorporated, units with the integral Rooftop Unit Controller (RTU-C) are communication compatible with the system that supports the BACnet Application Specific Controller device profile, LonMark Space Comfort Controller functional profile, or LonMark Discharge Air Controller functional profile. This is accomplished with a field installed BACnet or LonMark communication module. Refer to the Clear control/DDC manual for more detail; **Manufacturer Part number: 92-103249-01.**

F.2. Routing Control wiring

Figure F.2. – A: Electrical and Piping Routing

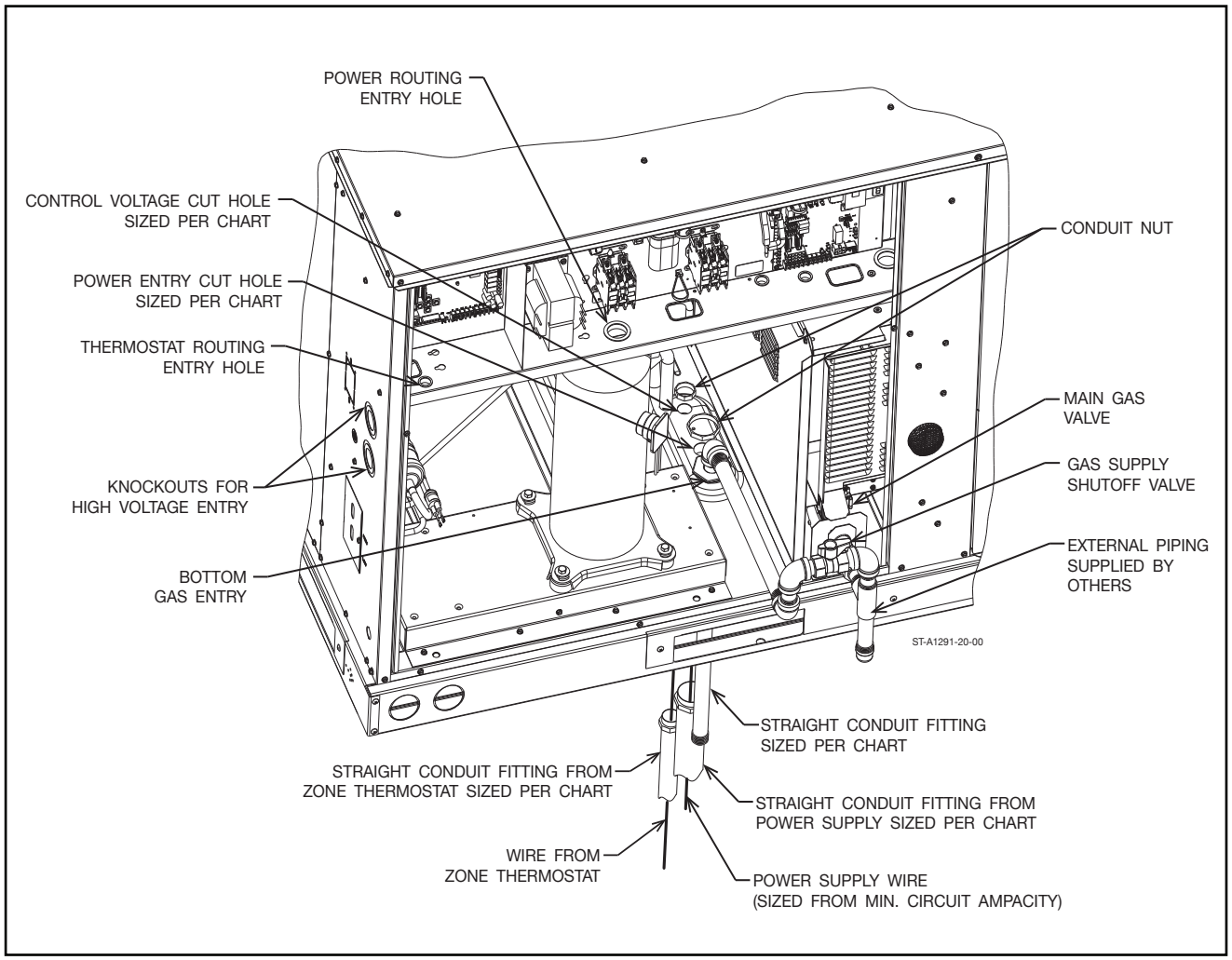

Figure F.2. – B: Hole Sizing for Conduit

	WIRE SIZE, AWG											
	14	12	10	8	6	4	3	2	1	0	00	000
CONDUIT SIZE	1/2”	1/2”	1/2”	3/4”	1”	1”	1-1/4”	1-1/4”	1-1/2”	1-1/2”	2”	2”
HOLE SIZE	7/8”	7/8”	7/8”	1-31/32”	1-23/64”	1-23/64”	1-23/32”	1-23/32”	1-31/32”	1-31/32”	2-15/32”	2-15/32”

NOTES: 1. DETERMINE REQUIRED WIRE SIZE FROM MINIMUM CIRCUIT AMPACITY SHOWN IN INSTALLATION & OPERATING INSTRUCTION.
2. BOTTOM POWER ENTRY WILL NOT ACCOMMODATE WIRE LARGER THAN #2 AWG (SHADED AREA).

F.3. Measuring Control Voltage Loads

Use a voltmeter to measure the low voltage and low voltage amp draws during operation. Accessories such as remote smoke detectors and excessive wire length can increase the amp draw on the low voltage wiring. Verify that the total amp draw on the 24Vac side is less than 0.3A in full operation.

G. GAS

G.1. Gas Piping Requirements

Install gas piping in accordance with local codes and regulations of the local utility company. In the absence of local codes, the installation must conform to the specifications of the national Fuel Gas Code, ANSI Z223.1 – latest edition.

IMPORTANT: Connect this unit only to gas supplied by a commercial utility.

G.1.1. Pipe Material Requirements

Ridged black iron pipe and fittings are recommended for the gas lines, or other materials as local codes allow or considered best practice. The use of flexible connectors is not recommended. Install a Union joint near the unit, after the cut off valve, for service.

G.1.2. Tools Required

Pipe wreches, Pliers, gas rated thread sealent, and leak detection fluid or soap and water is required.

G.1.3. Code Requirements

Local codes should be followed for the installation and marking of the gas piping. In the absence of local codes follow the National Fuel Gas Code NFPA 54 ANSI Z223.1 (Latest Revision), International Fuel Gas Code IFGC 408.4(Latest Revision), or the Canadian CANCGA B149.1HB (Latest Revision), must be followed.

G.1.4. Gas pressures and regulation

IMPORTANT: ENSURE that the furnace gas valve is not to be subjected to high gas line supply pressures.

DISCONNECT the furnace and its individual manual gas stop from the gas supply piping during any pressure testing that exceeds 1/2 PSIG (3.48 kPa). Natural gas supply pressure must be 5” to 10.5” w.c. LP gas supply pressure must be 11” to 13” w.c. This pressure must be maintained with all other gas-fired appliances in operation. The minimum gas supply pressure to the gas valve for proper furnace input adjustments is 5” w.c. for natural gas, however 6” to 7” is recommended. The minimum gas supply pressure is 11” w.c. for LP gas.

See sections ***J.5.1.1. “Measuring and Adjusting Supply Gas Pressures” and J.5.1.2. “Measuring and Adjusting Manifold Gas Pressures”*** for more details.

⚠WARNING

ELEVATIONS ABOVE 2000 FT. REQUIRE THAT THE FURNACE INPUT RATING BE ADJUSTED AND THAT THE SIZE OF THE BURNER ORIFICES BE RECALCULATED BASED ON ELEVATION AND GAS HEATING VALUE. THE BURNER ORIFICES MAY (OR MAY NOT) NEED TO BE CHANGED. SEE THE SECTION TITLED “HIGH ALTITUDE INSTALLATIONS” OF THIS BOOK FOR INSTRUCTIONS.

⚠WARNING

NEVER PURGE A GAS LINE INTO THE COMBUSTION CHAMBER. NEVER USE MATCHES, FLAME OR ANY IGNITION SOURCE FOR CHECKING LEAKAGE. FAILURE TO ADHERE TO THIS WARNING CAN CAUSE A FIRE OR EXPLOSION RESULTING IN PROPERTY DAMAGE, PERSONAL INJURY OR DEATH. TO CHECK FOR GAS LEAKAGE, USE AN APPROVED CHLORIDE-FREE SOAP AND WATER SOLUTION, OR OTHER APPROVED METHOD.

GAS VALVE

This furnace has a 24-volt gas valve. It has ports for measuring supply and manifold gas pressure. The valve body contains a pressure regulator to maintain proper manifold gas pressure. A control switch is on the valve body. It can be set to only the **"ON"** or **"OFF"** positions. The gas valve is a slow-opening valve. See Figure ***G.1.4. – A.***

When energized, it takes 2 to 3 seconds to fully open.

Figure G.1.4. – A White-Rodgers Two-Stage Gas Valve

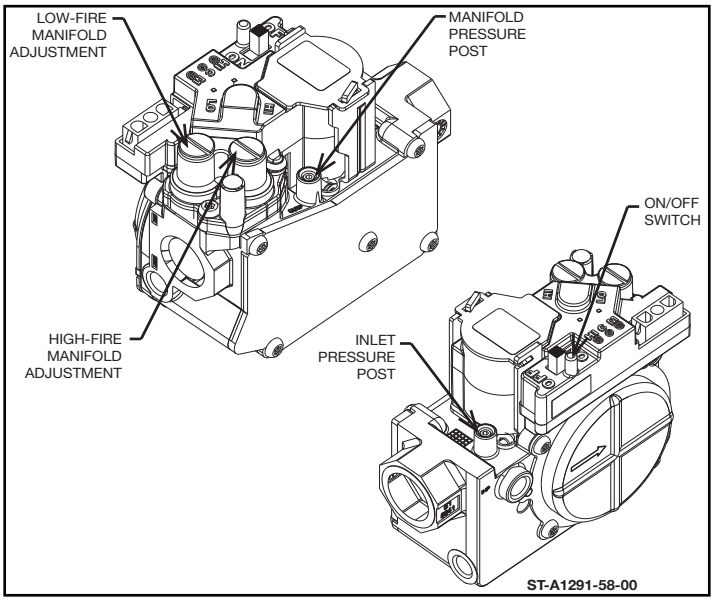

Figure G.1.4. - B: Burner Assembly Front View

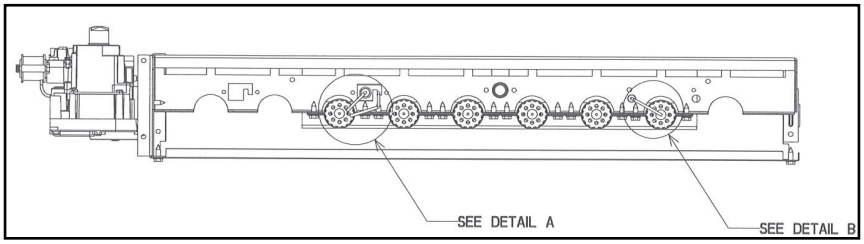

Figure G.1.4. - C: Burner Assembly Side View

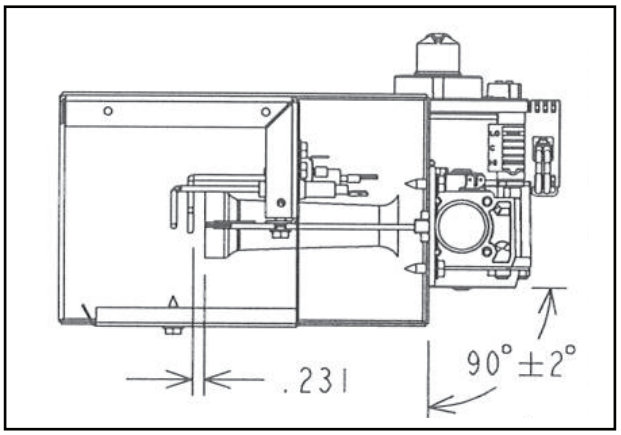

G. GAS

For 75,000 BTU input furnaces, the outside manifold orifice taps are plugged. The ignitor and flame sense are located on the outside of the center burner.

Ignitor location is critical for insuring a consistent carryover of the burner flame during ignition. The top of the electrode at dimension (0,0) must remain inside the hatched area

Figure G.1.4. – D: Ignitor Location

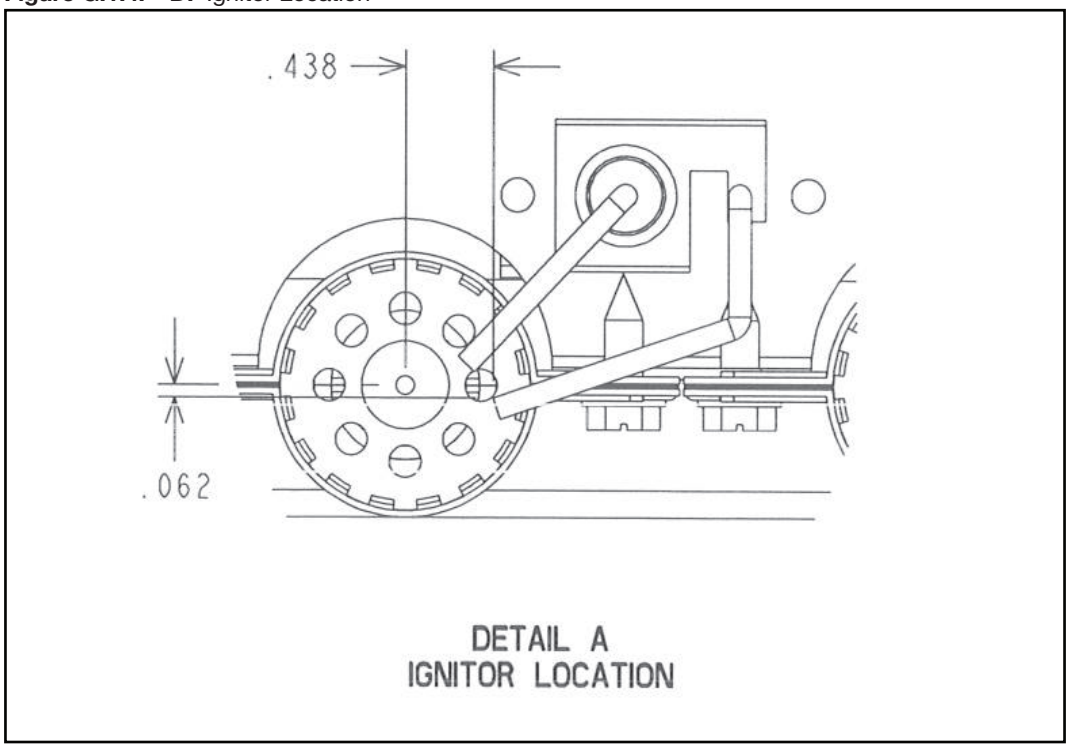

Correct location of the flame sensor will help to eliminate weak or no flame sense issues.

Figure G.1.4. - E: Flame Sense Location

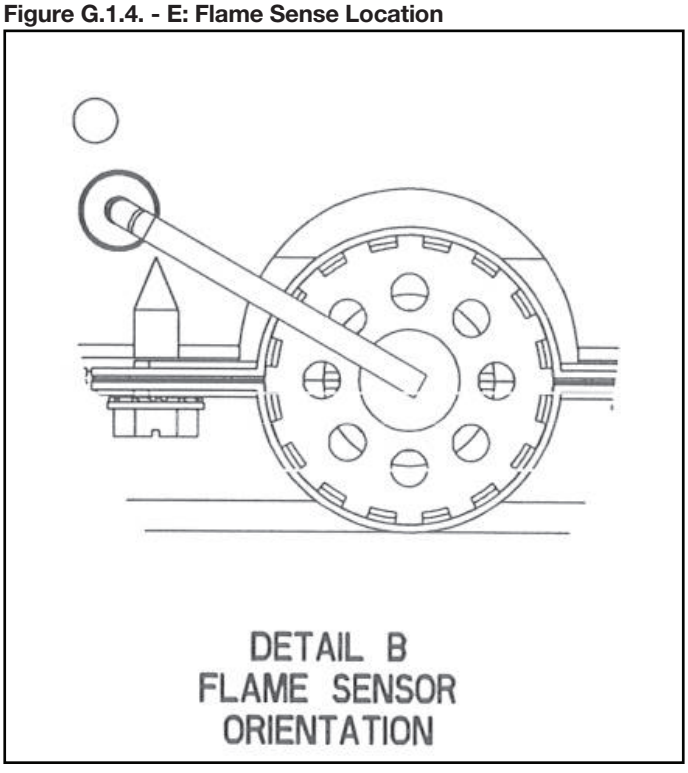

G.1.5. Sealing Threaded Connections – Best Practice

Use a gas rated and approved liquid, paste, or tape thread sealant on all threaded connections. Apply sealant to the male threads and tighten the fitting using wreches to hold both the fitting and the pipe. DO NOT OVERTIGHTEN THE PIPE GOING INTO THE GAS VALVE, DAMAGE MAY OCCUR. Test all threaded connections with leak test fluid or soap and water.

G.1.6. Gas Pipe Sizing and Capacity

Size the gas line to the furnace adequate enough to prevent undue pressure drop and never less than 3/4" pipe.

See ***Table G.1.6. - A*** for Gas Pipe Capacity. The capacities of gas pipe of different diameters and lengths in Cubic Ft/hr with pressure drop of 0.3 in. and specific gravity of 0.60 (natural gas) are shown in ***Table G.1.6. - A.*** After determining the pipe length, select the pipe size which will provide the minimum cubic foot/hour required for the gas input rating of the furnace.

By formula:

$$\frac{ft^3}{hr}\ \text{required} = \frac{\text{Gas Input of Furnace } \frac{BTU}{hr}}{\text{Heating Value of Gas } \frac{BTU}{hr}}$$

The gas input of the furnace is marked on the furnace rating plate. The heating value of the gas (BTU/FT3) may be determined by consulting the local natural gas utility or the L.P. gas supplier.

Table G.1.1 - A

NATURAL GAS PIPE CAPACITY TABLE (CU FT/HR)
Maximum capacity of pipe in thousands of BTU/hr of natural gas
Inlet pressure: less than 2 psi
Pressure Drop: 0.3 in. W.C.
Specific Gravity: 0.60

Nominal Iron Pipe* Size, Inches	Length of Pipe, Feet									
	10	20	30	40	50	60	70	80	90	100
1/2	131	90	72	62	55	50	46	42	40	38
3/4	273	188	151	129	114	104	95	89	83	79
1.0	514	353	284	243	215	195	179	167	157	148
1-1/4	1,060	726	583	499	442	400	368	343	322	304
1-1/2	1,580	1,090	873	747	662	600	552	514	484	455

After the length of pipe has been determined, select the pipe size which will provide the minimum cubic feet per hour reqired for the gas input rating of the furnace. By formula:

$$\text{Cubic feet per hour required} = \frac{\text{Gas Input of Furnace (BTU/HR)}}{\text{Heating Value of Gas (BTU/FT}^3\text{)}}$$

The gas input of the furnace is marked on the furnace rating plate. Call your local natural gas utility for the heating value of the gas (BTU/FT^3).

*Schedule 40 metallic pipe.

Reference the **National Fuel Gas Code NFPA 54, ANSI Z223.1- Pipe Sizing** for more information.

G. GAS

G.2. Procedure: Connecting Gas Lines to Gas Valve

1. Place backup wrench on valve, shown below in ***Figure G.2. - A.***

Figure G.2. – A: Backup Wrench Location

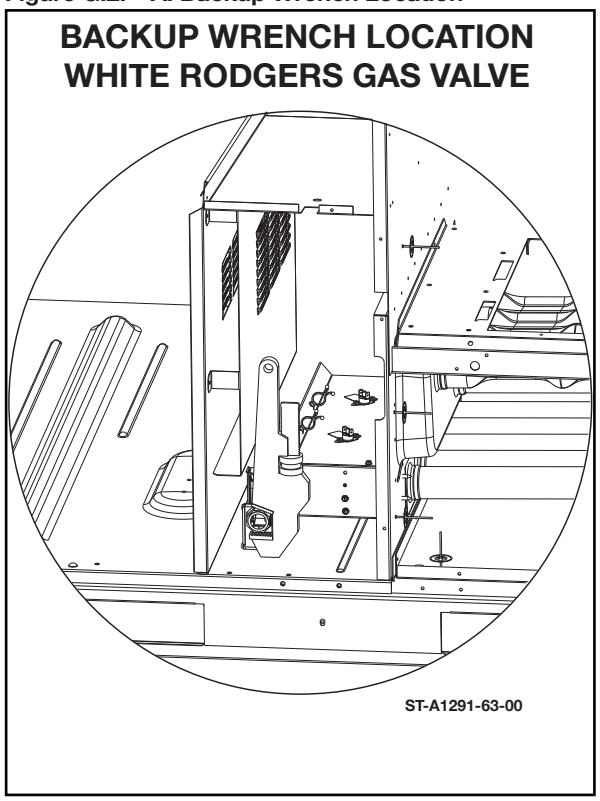

2. Connect the gas line to the gas valve supplied with unit. Routing can be through the gas pipe opening shown in ***Figure G.2.1.*** or through the base as shown in ***Figure F.2. – A: Electrical and Piping Routing***.

In making gas connections, avoid strains as they may cause noise and damage the controls. A backup wrench is required to be used on the valve to avoid damage.

3. Size the gas line to the furnace adequate enough to prevent undue pressure drop and never less than 3/4" pipe. See ***Section G.1.6*** on Gas Pipe Sizing and Capacity.

4. Install a drip leg or sediment trap in the gas supply line as close to the unit as possible. See ***Section G.2.1*** on Drip Leg Requirements.

5. Install an outside ground joint union to connect the gas supply to the control assembly at the burner tray.

6. Gas valves have been factory installed. Install a manual gas valve where local codes specify a shut-off valve outside the unit casing. ***(See Figure G.2.1.)***

7. Make sure piping is tight. **A pipe compound resistant to the action of liquefied petroleum gases must be used at all threaded pipe connections.**

8. **IMPORTANT:** Any additions, changes or conversions required for the furnace to satisfactorily meet the application should be made by a qualified installer, service agency or the gas supplier, using factoryspecified or approved parts. In the commonwealth of Massachusetts, installation must be performed by a licensed plumber or gas fitter for appropriate fuel.

IMPORTANT: *Disconnect the furnace and its individual shutoff valve from the gas supply piping during any pressure testing of that system at test pressures in excess of 1/2 pound per square inch gauge or isolate the system from the gas supply piping system by closing its individual manual shutoff valve during any pressure testing of this gas supply system at pressures equal to or less than 1/2 PSIG.*

IMPORTANT: *Check the rating plate to make certain the appliance is equipped to burn the type of gas supplied. Care should be taken after installation of this equipment that the gas control valve not be subjected to high gas supply line pressure.*

G.2.1. Drip Leg Requirement

When connecting the supply gas to the gas valve, install a drip leg/sediment trap in compliance with the International Residential Code G2419.4.

Figure G.2.1. – A: Drip Leg

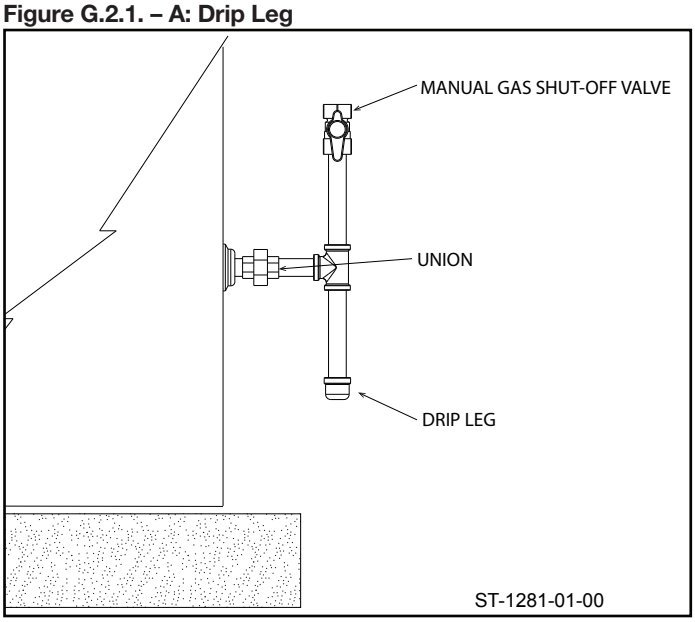

G.2.2. Purging Gas Lines

It may be necessary to purge any air from the gas lines prior to operation. This can be done through the gas pressure tap on the gas valve or at a union in the gas line. Follow best practices to purge the gas line. Ensure all fittings are sealed and tight after purging.

G.2.3. Leak Testing

To check for gas leaks, use a soap and water solution or other approved method. **DO NOT USE AN OPEN FLAME.**

⚠WARNING: DO NOT use an open flame to check for leaks. The use of an open flame can result in fire, explosion, property damage, personal injury or death.

⚠WARNING: This unit is equipped at the factory for use on natural gas only. Conversion to lp gas requires a special kit supplied by the distributor or manufacturer. Mailing addresses are listed on the furnace rating plate, parts list and warranty. Failure to use the proper conversion kit can cause fire, carbon monoxide poisoning, explosion, personal injury, property damage or death.

NOTE: The valve can be converted to use liquefied petroleum (LP) gas by replacing the high and low fire pressure regulator springs with the conversion kit springs. The LP kit springs allow the regulator to maintain the proper manifold pressure at high and low fire for LP gas.

NOTE: Order the correct LP conversion kit from the furnace manufacturer.

See Conversion Kit Index shipped with unit and table below for proper LP kit number.

A qualified technician must perform furnace conversion to LP gas.

Model Number	Kit Number U.S./Canadian
(-)GED 150k, 105k, 225 k	FP39

ORIFICE INSTALLATION

LP Gas is a manufactured gas that has consistent heating value across most regions. The Sea Level input should still be reduced by 4% per thousand ft. above 2,000 feet and the orifice size must be selected based on the reduced input selection chart in High Alt. Instruction Section.

To change orifice spuds for conversion to LP:

1. Shut off the gas supply and remove gas connection to the gas valve.
2. Remove the gas manifold.
3. Replace the natural gas orifices with LP orifices.
4. Reassemble in reverse order.
5. Refer to section ***J.5.1.1. Measuring and Adjusting Supply Gas Pressures*** for confirming inlet pressure and adjusting manifold pressure.

⚠WARNING: LP tanks from local LP supplier must not be used to store anything (such as fertilizer) except LP gas. This includes all delivery vessels (LP trucks). If material other than LP gas is used in the same vessels/tank as the LP gas, the LP gas can become contaminated and damage the furnace. This will void the manufacturer's warranty. Contact the supplier to make sure fertilizer is not used in the same tanks used to store and deliver LP gas.

Table G.3 - A

LP GAS PIPE CAPACITY TABLE (CU FT/HR)
Maximum capacity of pipe in thousands of BTU/hr of undiluted liquified petroleum gases (at 11.0" W.C. inlet pressure)

(Based on a Pressure Drop of 0.5" W. C.)

Nominal Iron Pipe* Size, Inches	Length of Pipe, Feet											
	10	20	30	40	50	60	70	80	90	100	125	150
1/2	275	189	152	129	114	103	96	89	83	78	69	63
3/4	567	393	315	267	237	217	196	182	173	162	146	132
1.0	1,071	732	590	504	448	409	378	346	322	307	275	252
1-1/4	2,205	1,496	1,212	1,039	913	834	771	724	677	630	567	511
1-1/2	3,307	2,299	1,858	1,559	1,417	1,275	1,181	1,086	1,023	976	866	787
2.0	6,221	4,331	3,465	2,992	2,646	2,394	2,205	2,047	1,921	1,811	1,606	1,496

Example (LP): Input BTU requirement of unit, 120,000
Equivalent length of pipe, 60 ft. = 3/4" Inside Diameter required
*Schedule 40 metallic pipe.
Reference the **National Fuel Gas Code NFPA 54, ANSI Z223.1- Pipe Sizing** for more information.

G.4. Operation and Testing

G.4.1. Warnings

⚠WARNING: DO NOT attempt to manually light this furnace with a match or any open flame. Attempting to do so can cause an explosion or fire resulting in property damage, personal injury or death.

⚠WARNING: The spark ignitor and ignition lead from the ignition control are high voltage.

Keep hands or tools away to prevent electrical shock. Shut off electrical power before servicing any of the controls. Failure to adhere to this warning can result in personal injury or death.

⚠WARNING: Should overheating occur or the gas supply fail to shut off, turn off the manual gas control valve to the furnace. Failure to do so can result in an explosion or fire causing severe personal injury or death!

G.4.2. First time operation

G.4.2.2. Normal Furnace Sequence Of Operation

1. Thermostat initiates call for heat.

2. Core Command runs self-diagnostic. Core Command confirms the Main Limit Control (MLC) is closed; the Negative Pressure Control (NPC) is open and checks Manual Reset Limit Controls (MRLC) for continuity.

3. Core Command energizes Induced Draft Motor (IDM).

4. Core Command confirms NPC is closed.

5. If NPC is closed, the Core Command starts a 30-second prepurge.

6. Following 30 second prepurge, the Core Command energizes the Spark Electrode (SE) up to 7 seconds or until the Remote Flame Sensor proves burner flame. Core Command de-energizes the SE and begins the 20-second blower ON delay.

7. The furnace will respond to thermostat command following 20-second blower ON delay.

Sequences- system doesn't light or doesn't sense flame:

• NPC Remains Open After the IDM is Energized:

1. The IDM will run for 60 seconds in an attempt to close the NPC. IDM is de-energized then energized and the ignition attempt is repeated.

2. After four attempts to close the NPC, the system will enter a 1-hour lockout period.

• Failed Ignition or Core Command Doesn't Sense Flame:

1. Following the 30-second prepurge period, the SE and gas valve are energized up to 8 seconds.

2. If flame is not sensed during the 8-second period after the gas valve is energized, the gas valve and SE are de-energized.

3. IDM is de-energized and the Core Command verifies that the NPC is open. Once the NPC is confirmed open, the Core Command will begin a second ignition attempt.

4. The system will attempt three tries at ignition. Following a third failed attempt the system will enter a 1-hour lockout period.

G.4.2.3. Single-Stage Thermostat and Auto-Staging: 208-230V, 575V & 460V

Application where a single-stage thermostat is used with this two-stage furnace. Furnace will run at low-fire input for a 15 minute period. If thermostat demand is not satisfied, Core Command will automatically stage to highfire until thermostat demand is met. To accommodate auto-staging, simply secure a jumper wire between W1 and W2 on the Core Command. See ***Figure G.4.2.3. - A*** for details.

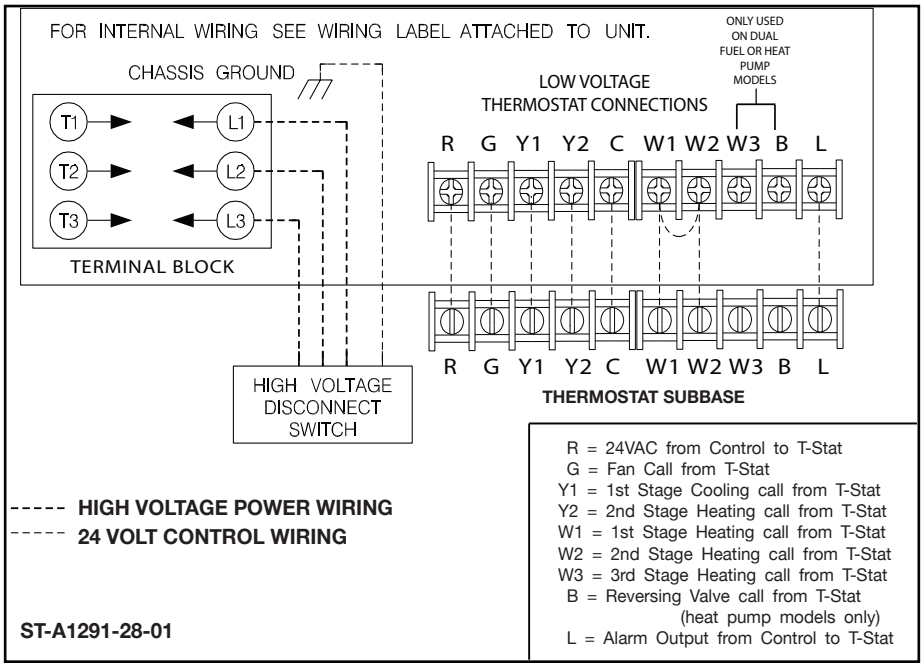

G.4.2.4. Gas Pressure Testing And Adjustment

Refer to ***Section J.5.1.1***. for detailed instructions on testing and adjusting gas pressure.

G.4.2.5. Flame inspection

Inspect burner flame after the indoor blower motor is energized. Burner flame should be directed down the center of primary heat exchanger tube with little or no lifting. Carry-over flame should not impinge on center panel. Any flame turbulence could be an indication of an air leak between the burner and heat exchanger compartment or a partially blocked burner orifice.

Natural Gas Flame: almost completely blue with some yellow in the center of the flame.

LP Gas Flame: predominantly a blue flame with some yellow tipping.

G.4.2.6. Orifice Selection and High Altitude Adjustments

Notice: derating of the heating input for high altitude in the field is unlawful in canada (refer to can/cga 2.17). Units installed in altitudes greater than 2,000 feet (610 meters) must be shipped from the factory or from a factory authorized conversion station with the heating input derated by 10% so as to operate properly in altitudes from 2,000 - 4,500 feet (610 - 1,373 meters).

NATURAL GAS AT HIGH ALTITUDES

Furnaces installed above 2,000 feet require the furnace to be de-rated 4% per thousand feet above sea level.

IMPORTANT: Factory installed orifices are calculated and sized based on a sea level Natural Gas heating value of 1050 BTU per cubic ft.

NOTE: Orifices are available through your local distributor. Reference the following tables for approximate orifice sizing.

The following are examples of orifice sizing using the “Flow of Gas Through Fixed Orifices” section in the National Fuel Gas Code.

For a simplified estimation of orifice size based on gas heating value and elevation, the following tables may be used. However, calculations are the best method.

Example: 900 BTU/ft3 Regional Natural Gas Heating Value

I/H = Q

25000 / 900 = 27.78 ft3

I = Sea Level input (per burner): 25000

H = Sea Level Heating Value: 900

Q = 27.78 ft3 Natural Gas per hour.

From Table E1.1a of National Fuel Gas Code, 2015 (3.5” w.c.).

Orifice required at Sea Level: #40

from the National Fuel Gas Code. Orifice required at 5000 ft. elevation (4% de-rate per thousand ft): #42

Orifice required at 8000 ft. elevation (4% de-rate per thousand ft.): #44

Example: 1050 BTU/ft3 Regional Natural Gas Heating Value

I / H = Q

25000 / 1050 = 23.81ft3

I = Sea Level input (per burner): 25000

H = Sea Level Heating Value: 1050

Q = 23.81 ft3 Natural Gas per hour.

From the National Fuel Gas Code, (3.5" w.c.).

Orifice required at Sea Level: #43 From the National Fuel Gas Code,

Orifice required at 5000 ft. elevation (4% de-rate per thousand ft.): #45

Orifice required at 8000 ft elevation (4% de-rate per thousand ft): #47

ORIFICE ORDERING INFORMATION

Orifice sizes are selected by adding the 2-digit drill size required in the orifice part number. Drill sizes available are 39 through 64; metric sizes available 1.10mm (-90) and 1.15mm (-91):

Orifice Part Number 62-22175-(drill size)

Example 1:

60 drill size orifice required

Part # 62-22175-60

Example 2:

1.15mm drill size orifice required

Part # 62-22175-91

NATURAL GAS ORIFICE SELECTION BASED ON HEATING VALUE & ELEVATION*

HIGH ALTITUDE

Notes:

1. Furnaces are factory equipped with orifices sized for 1050 sea level heating value gas.

2. Installer must be aware of the local heating value (sea level standard) to use the chart below.

3. This chart is based on the National Fuel Gas Code (NFGC) and based on natural gas with a specific gravity of 0.60

4. The recommended orifices below allow the furnace to operate within 10% of design rate. However, NFGC calculations are the best method.

5. Furnace operation is optimized when operating at design rate. Installer is responsible to verify rate.

NATURAL GAS ORIFICE SELECTION BASED ON HEATING VALUE & ELEVATION*

22,800 BTU/burner

		ELEVATION								
Grey Cells Indicate Factory Orifice Size		Sea Level to 2,000'	2001' to 3,000'	3,001' to 4,000'	4,001' to 5,000'	5,001' to 6,000'	6,001 to 7,000'	7,001' to 8,000'	8,001' to 9,000'	9,001' to 10,000'
Gas Heating Value (BTU's/ ft3) @ Sea Level**	1,100	44	45	45	45	46	47	47	48	48
	1,050	43	44	44	44	45	45	46	47	47
	1,000	43	43	44	44	45	45	46	47	47
	950	42	42	43	43	43	44	44	45	46
	900	42	42	43	43	43	44	44	45	46
	850	40	41	42	42	42	43	43	44	44
	800	39	40	41	41	42	42	43	43	44
	750	37	38	39	39	40	41	42	42	43
	700	36	37	38	38	39	40	41	41	42

20,800 BTU/burner (50 HZ model)

		ELEVATION								
Grey Cells Indicate Factory Orifice Size		Sea Level to 2,000' FT	2001' to 3,000' FT	3,001' to 4,000' FT	4,001' to 5,000' FT	5,001' to 6,000' FT	6,001 to 7,000' FT	7,001' to 8,000' FT	8,001' to 9,000' FT	9,001' to 10,000' FT
Gas Heating valve (BTU/ft3)	1100	46	47	47	47	48	48	49	49	50
	1050	45	46	47	47	47	48	48	49	49
	1000	44	45	45	45	46	47	47	48	48
	950	43	44	44	44	45	45	46	47	47
	900	43	44	44	44	45	45	45	47	47
	850	42	42	43	43	43	44	44	45	46
	800	41	42	42	42	43	43	44	44	45
	750	40	41	42	42	42	43	43	44	44
	700	38	39	40	41	41	42	42	43	43

19,000 BTU/burner (50 HZ model)

		ELEVATION								
Grey Cells Indicate Factory Orifice Size		SEA LEVEL TO 2,000 FT	2,001 TO 3,000 FT	3,001 TO 4,000 FT	4,001 TO 5,000 FT	5,001 TO 6,000 FT	6,001 TO 7,000 FT	7,001 TO 8,000 FT	8,001 TO 9,000 FT	9,001 TO 10,000 FT
Gas Heating valve (BTU/ft3)	1100	47	48	48	49	49	49	50	50	51
	1050	46	47	47	47	48	48	49	49	50
	1000	45	46	47	47	47	48	48	49	49
	950	45	46	47	47	47	48	48	49	49
	900	44	45	45	45	46	47	47	48	48
	850	43	44	44	44	45	45	46	47	47
	800	43	44	44	44	45	45	46	47	47
	750	42	42	43	43	43	44	44	45	46
	700	40	41	42	42	42	43	43	44	44

* Tables are derived from the National Fuel Gas Code. To determine the correct orifice for your installation consult the National Fuel Gas Code

** Be sure to use sea level heating value. Heating value may be obtained from a local utility, heating value must be converted to sea level equivalent sea lefel equivalent in order to use this table.

G. GAS

NATURAL GAS ORIFICE SELECTION BASED ON HEATING VALUE & ELEVATION*

19,000 BTU/burner (50 HZ model)

		ELEVATION								
Grey Cells Indicate Factory Orifice Size		Sea Level to 2,000'	2001' to 3,000'	3,001' to 4,000'	4,001' to 5,000'	5,001' to 6,000'	6,001 to 7,000'	7,001' to 8,000'	8,001' to 9,000'	9,001' to 10,000'
Gas Heating Value (BTU's/ ft3) @ Sea Level**	1,100	47	48	48	49	49	49	50	50	51
	1,050	46	47	47	47	48	48	49	49	50
	1,000	45	46	47	47	47	48	48	49	49
	950	45	46	47	**47**	47	48	48	49	49
	900	44	45	**45**	**45**	46	47	47	48	48
	850	43	44	44	44	45	45	46	47	47
	800	43	44	44	44	45	45	46	47	47
	750	42	42	43	43	43	44	44	45	46
	700	40	41	42	42	42	43	43	44	44

* Tables are derived from the National Fuel Gas Code. To determine the correct orifice for your installation consult the National Fuel Gas Code

** Be sure to use sea level heating value. Heating value may be obtained from a local utility, heating value must be converted to sea level equivalent sea lefel equivalent in order to use this table.

LP GAS AT HIGH ALTITUDES

NOTICE: The conversion shall be carried out by a manufacturer's authorized representative, in accordance with the requirements of the manufacturer, provincial, or territorial authorities having jurisdiction and in accordance with the requirements of the CSA b149.1 Or CSA b149.2 Installation codes.

NOTE: Keep any parts removed during LP conversion procedure stored with the product literature for future use.

LP Gas is a manufactured gas that has consistent heating value across most regions.

The NFGC guidelines are used with the following exception:

The recommended LP Gas high altitude orifice selections differ slightly in that the NFGC LP orifice chart, as they are not accurate for these products. The National Fuel Gas Code LP orifices are based on an 11" of water column pressure at the orifice, which differs from products that use 10" of water column at the orifice. This difference requires a deviation from the NFGC orifice size recommendations. The Sea Level input should still be reduced by 4% per thousand ft. and the orifice size must be selected based on the reduced input in the following tables.

LP Gas BTU/hr per Burner based on Orifice Size & Elevation

Orifice Pressure: 10" W.C.

		ELEVATION								
BTU/hr per burner	Electrical Frequency	SEA LEVEL TO 2,000 FT	2,001 TO 3,000 FT	3,001 TO 4,000 FT	4,001 TO 5,000 FT	5,001 TO 6,000 FT	6,001 TO 7,000 FT	7,001 TO 8,000 FT	8,001 TO 9,000 FT	9,001 TO 10,000 FT
25,000 BTU/hr	60 HZ models	54	54	54	54	55	55	56	56	56
22,800 BTU/hr		54	55	55	55	55	55	56	56	56
20,800 BTU/hr	50 HZ models	55	55	55	56	56	56	56	56	57
19,000 BTU/hr		56	56	57	57	57	58	59	59	60

LP Gas BTU/hr per Burner based on Orifice Size & Elevation

Orifice Pressure: 10" W.C.

	ELEVATION	
BTU/hr per burner	Sea Level to 2,000'	2,001' to 3,000'
20,000 BTU/hr	55	56
25,000 BTU/hr	54	54

J. STARTUP AND OPERATION

J.1. Final Inspection

J.1.1. Check for Refrigerant Leaks

Inspect the unit for any damage to the coils and tubing that could cause a leak.

J.1.2. Check Level of Unit

Refer to ***Section C.6.2.*** for setting/checking the level of the unit.

J.1.3. Check Electrical Connections For Proper Torque

Use an Inch Pound rated torque wrench to ensure proper torque. DO NOT CONFUSE THIS WITH A FOOT POUND RATED WRENCH, Damage will occur.

Recommended torques for securing wiring:

- To the contactor: 40 in-lb.
- From the T-stat to the control board: 8.0 in-lb.

Figure J.1.3. – A: Where to Wire for Thermostat

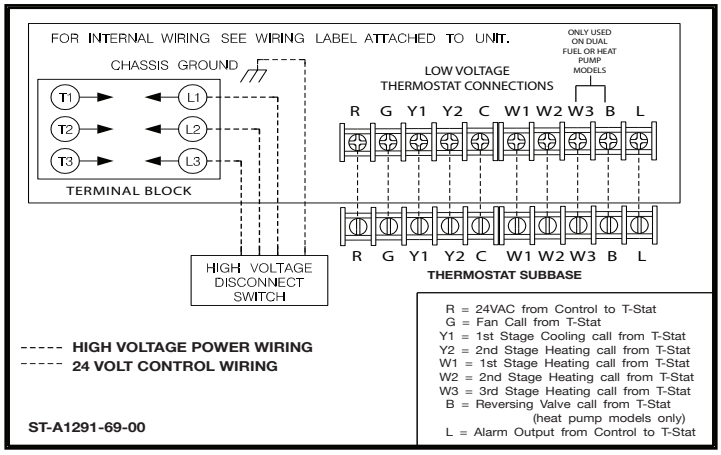

J.1.4. Check Control Cables For Proper Connection

Verify all cables are seated and connected in the unit as some might come loose during shipping and transport.

J.1.5. Check For Gas Leaks

Double Check for any gas leaks on the installed piping. Refer to ***Section G.2.3.*** for more information.

J.1.6. Check Filter Installation

Verify that filters are seated and oriented correctly in the unit as some might come displaced during shipping and transport. Refer to ***Section D.3.*** for more information on filters and filter installation.

J.1.7. Check Condensate Drain installation

Verify the Condesate Drain Trap is a minium of 3 inches deep, plus the Blower Fan Static Pressure. Verify the Outlet of the drain trap is a minimum of 3 inches below the outlet of the drain pan. Ensure the outlet of the trap is routed to a suitable drain location as required by local code. Refer to ***Section C.5*** and ***Figure C.5.1*** – A for more information.

J.1.8. Check Blower Compartment for Accessories

Open all compartments to ensure there are no tools or other misc parts remaining in the unit from setup. This is most important on the blower section to avoid damage to the blower assembly.

J.2. Turning on Power for the First time

J.2.1. Checking for Proper 3-Phase Voltage

Verify that proper power has been supplied to the unit. This is critical for correct operation of the compressor.

J.2.2. Check For Proper Phase

Verify that the compressor is running correctly.

J.2.2.1. Standard Blower Rotation

As a reminder, all units with a belt drive motor may run backwards if the unit is wired incorrectly. See ***Section E.3.4. Checking Phase and Motor Rotation*** for more information.

J.2.2.2. VFD Blower Rotation

As a reminder, all units with VFD driven blower motor will have the correct rotation even if the phase to the unit is wired incorrectly. See ***Section E.3.4.1. Checking Phase with VFD Drive*** for more information.

J.2.3. Checking Low (Control) Voltage

Use a voltmeter to measure the low voltage and low voltage amp draws during operation. Accessories such as remote smoke detectors and excessive wire length can increase the amp draw on the low voltage wiring. Verify that the total amp draw on the 24Vac side is less than 0.3A in full operation. Refer to ***figure F. – A*** for proper low voltage wire lengths.

J.3. Checking and Adjusting Air Flow

For Economizer and Diffuser Pressure Drop Data, please refer to the end of ***Appendix C: Airflow Performance Data.***

Figure J.3. – A: Static Pressure and Air Temp Measurement Location

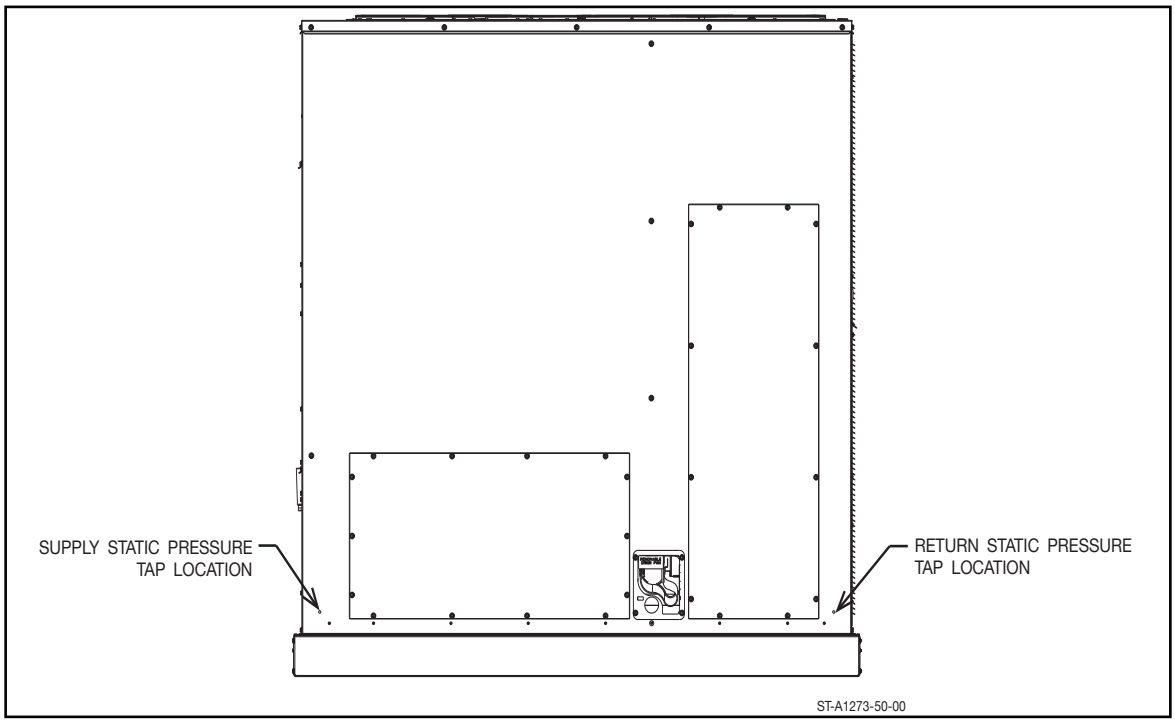

J.3.1. Static Pressures and Measurements

- To measure the static pressure of the system, locate the locating dimples near the supply/return duct openings, and drill a hole to the size necessary for the test probe. The location of these dimples are shown in ***Figure J.3. - A.***
- NOTE: After taking airflow measurements, seal these openings per best practice to prevent airflow leakage and water entry into the unit.
- NOTE: Drilling test tap locations in other panels or doors could put the test probe in a turbulent zone providing false readings.

J.3.1.1. Using Tools

Use a calibrated monometer to measure the static pressure of the blower. Insert the meter probe into the tap location. Make sure any economizer or outside air dampers are closed and run the fan at the maximum, full speed setting. Record the reading for the return air and supply air separately.

J. STARTUP AND OPERATION

J.3.2. Air Flow Measurements and Adjustments

- Measure the supply/ return static to get the unit static pressure by drilling out the simple locations shown in ***Figure J.3.2 - A.***
- Take the measured static pressure and match to the static listed on the airflow table to find your CFM.
- Take the measured static pressure and match to the static listed on the airflow table to find your CFM.

Use the charts and guide provided in the Installation and Operation instructions provided with the unit to calculate the air flow, against the measured static pressures and number of turns on the adjustable blower sheave. Verify the measured air flow against the charts.

Figure J.3.2. – A: Blower Assembly and Motor

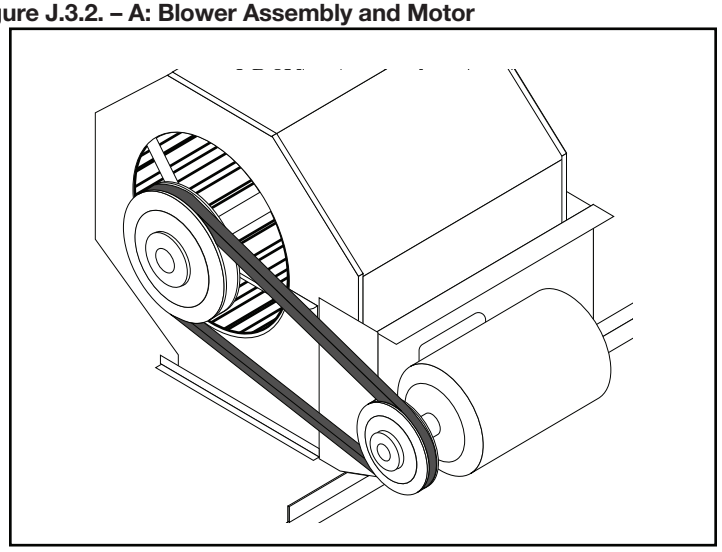

If adjustment is needed, turn off the power to the entire system, and adjust the adjustable blower sheave. To do this, loosen the belt tension and remove the belt. Using an Allen wrench to loosen the set screw on the end of the adjustable blower sheave, turn the blower sheave in until it is fully closed.

Figure J.3.2. – B: Adjustable Blower Sheave

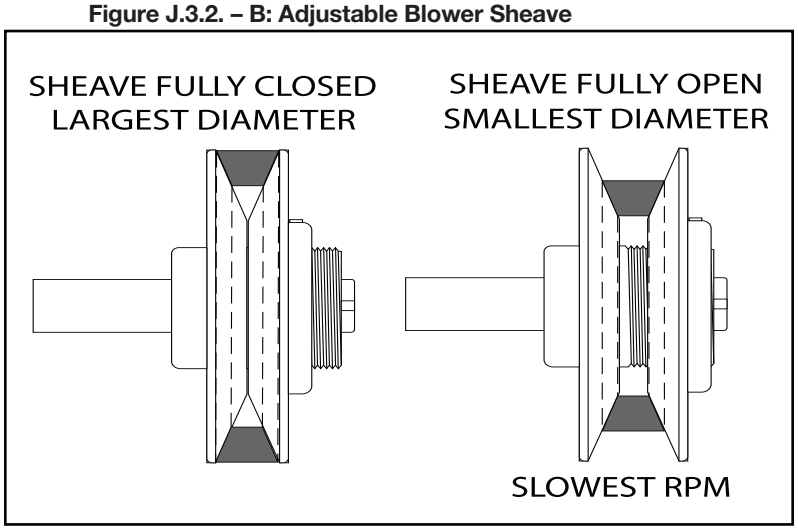

Using the charts determine the total number of turns needed on the sheave. Make those turns in half turn increments, once set, align the set screw with the Flat section on the sheave threads. Tighten the set screw to secure the sheave.

Reinstall the belt and tension properly and power on the system. Allow the thermostat to call for a fan, make sure the VFD ramps the blower to 100% or 60hz.

Once the fan is at speed, measure the air flow and static pressure, compare against the charts. If additional adjustment is needed repeat the adjustment procedure.

J.3.2.1. Adjusting Fresh Air Flow with Economizer

See the above sections for measuring airflow, a nd r efer t o t he I&O i ncluded with t he Economizers for more information on adjusting airflow.

These I&Os can also be found on the manufacturer's website.

J.3.2.2. Adjusting Fresh Air Flow with Damper

All dampers are field install accessories. See the above sections for measuring airflow, a nd r efer to the I&O included with the fresh air dampers for more information on adjusting airflow.
Refer to local building codes for any fresh air requirements.

These I&Os can also e found on the manufacturer's website.

J.4. Checking Cooling Operation

Note: In the below section, first and second stage cooling applies to ONLY the 6 ton units. For 3-5T units, only first stage applies.

COOLING SEQUENCE OF OPERATION

A. Call for cooling

1. The zone thermostat contacts close, and a call for cooling is initiated.

2. Inputs 'Y1' and 'G' to the control are energized.

3. The control senses input to 'Y1' and 'G'. After a 1sec delay, the control energizes both the indoor blower and first stage compressor.

4. The control enters normal operating loop were all inputs are continuously checked.

5. Zone thermostat is satisfied.

6. The blower will continue to run for a preset period of time after the zone thermostat is satisfied.

7. The control goes into standby mode displaying a "O".

B. Call for second stage cooling. After first stage cooling established; starting from A6.

1. If a call for second stage cooling is initiated after a call for first stage cooling is established, the control energizes 'Y2' and energizes the second stage compressor.

2. Then the control enters the normal operating loop where all inputs are continuously checked.

C. Second stage satisfied and first stage still called for; starting from B2.

1. 'Y2' is de-energized and the second compressor stage is de-energized.

D. First stage and second stage called simultaneously.

1. The zone thermostat contacts close, and a call for first and second stage cooling is initiated.

2. Inputs 'Y1', 'Y2' and 'G' to the control are energized.

3. The control senses 'Y1', 'Y2' and 'G'. After a 1sec delay, the control energizes the indoor blower, and the first and second compressor stages.

E. First stage and second stage removed simultaneously.

1. Upon a loss of 'Y1' and 'Y2', the compressor is de-energized. The control de-energizes the indoor blower relay, and cuts off the blower after an indoor blower delay.

2. The control goes into standby mode displaying a "O".

CONTINUOUS FAN MODE

A 'G' input only indicates a zone thermostat call for continuous indoor blower operation.

TIME DELAY BYPASS for non-DDC units

The Time Delay Bypass resets the ICC (Integrated Compressor Control) from any lockout mode or bypasses compressor anti-short cycle delay timer. To bypass the time delay, press the SW1 button with an an insulated probe for 1sec and then release.

FAULT RECALL OPERATION for non-DDC units

To enter FAULT RECALL mode, press the SW1 button with an insulated probe for 2sec and release. Upon entering and exiting the FAULT RECALL mode, the top bottom segments of the 7-segment display will be activated. The ICC will automatically scroll through the stored faults on the 7-segment display. Each fault is displayed one time with the top segment of the 7-segment display activated between faults. Each fault is displayed with the most recent fault displayed first. An "O" will be displayed when no faults are stored. The ICC will automatically exit the FAULT RECALL mode after displaying stored faults.

An example of one LPC fault and one HPC fault scrolled on the display is shown as: -21-23

CLEAR FAULT HISTORY for non-DDC units.

To clear FAULT HISTORY, press the SW1 button with an insulated probe for 5sec and release. T

J. STARTUP AND OPERATION

The top and bottom segments of the 7-segment display will be activated and flash to indicate the history has been cleared.

Example: ======

TEST MODE for DDC Units

For units with DDC, there is a “Run Test” mode that will aid in diagnostics during installation.

Please refer to the CLEAR CONTROL MANUAL for more info; Manufacturer Part Number: 92-103249-01

Figure: Clear Control under Test mode for DDC

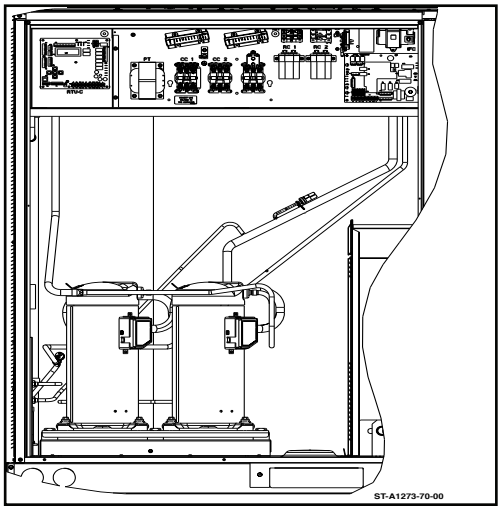

J.4.1. Checking Refrigerant Pressures

To check refrigerant pressures, attach R410a manifold gauges to the high/lo service ports. The upper port is the high pressure port, and the lower is the low pressure port. **BE SURE TO USE ZERO LOSS FITTINGS WHILE MEASURING PRESSURE; ANY LOSS OF CHARGE MAY IMPACT PERFORMANCE.**

See section ***C.2.1.Tools Required for Installing and Servicing R-410A Models.***

Figure J.4.1. –A: Service Port Location

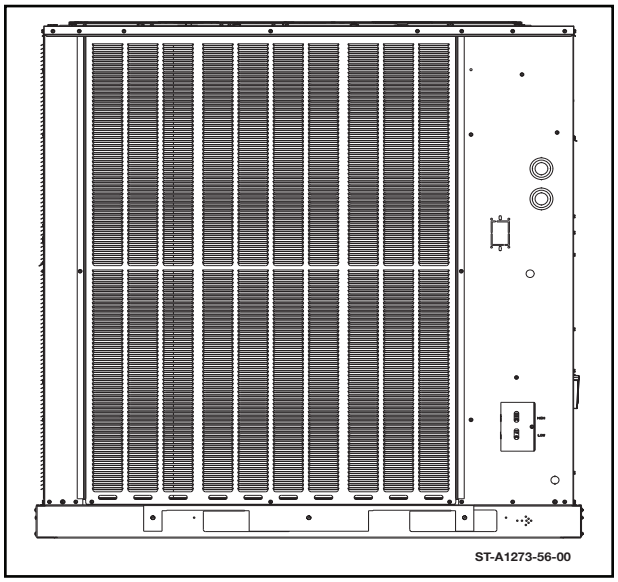

J.4.1.1. Refrigerant Pressure Charts

See ***Appendix F*** towards the end of this manual for Refrigerant Pressure Charts.

J.4.2. Checking Sub Cooling for Adjusting Charge Weight

See ***Appendix F*** towards the end of this manual for Refrigerant Charging Charts.

NOTE: This procedure is very important for optimizing this product’s performance.

How to check the unit’s subcooling to fine-tune refrigerant charge:

1. The Indoor ambient temperature must be between 72 °F and 82 °F dry bulb at the indoor coil.

2. Confirm the indoor air supply is at the rated CFM listed in ***Appendix A***.

3. Allow the system to run long enough for temperatures and pressures to stabilize; at least fifteen minutes.

4. Measure liquid pressure and line temperature at the liquid line service port (refer to section ***J.4.2.1.*** below for the liquid line temperature measurement location). USE ZERO LOSS FITTINGS WHILE MEASURING PRESSURE; ANY LOSS OF CHARGE MAY IMPACT PERFORMANCE.

5. To find the saturation temperature at the measured pressure, subtract the measured liquid line temperature from the saturation pressure to get the sub-cooling.

6. Check if the Sub-Cooling is within +/- 1.5 °F tolerance.

7. If the sub-cooling values are significantly different (> 20 psig) from those listed on the table in Appendix F, there may be an airflow or component issue. Refer to section M. Diagnostics for more information.

J.4.2.1. Measuring Air Temperature and Liquid Line Temperature

Measuring air temperature:

1. Insert a thermometer in the supply air duct as close to the unit as possible.

2. Insert a thermometer in the return air duct as close to the filters as possible.

3. If preferred, use the locations shown in ***Figure J.4.2.1. - A: Line Temperature Measurement Location*** instead of the supply/ return ductwork.

4. Operate the unit for a minimum of 15 minutes in cooling mode.

5. When the thermometer in the supply air duct stops changing (approximately five minutes), subtract the return air temperature from the supply air temperature. This is the cooling mode temperature difference.

If the measured temperature difference is not reducing, or if the return air is not reaching the thermostat set point, the air flow is too low. Airflow must be increased by either removing the restrictions in the duct system, or by changing the air flow. See ***Section J.3.2. Air Flow Measurements and Adjustments*** for changing air flow.

IMPORTANT: Some high-efficiency filters have a greater than normal resistance to airflow. This can negatively affect airflow. BE SURE TO CHECK THE AIRFLOW if using any filter other than the factory-provided filter.

Measuring line temperature:

1. Attach a thermometer or thermocouple to the liquid refrigerant line right after the filter-dryer. See ***Figure J.4.2.1. - A: Line Temperature Measurement Location.***

2. Operate the unit for a minimum of 15 minutes in cooling mode.

3. When the measurement of the temperature stops changing (approximately five minutes), record the temperature.

Figure J.4.2.1. – A: Line Temperature Measurement Location

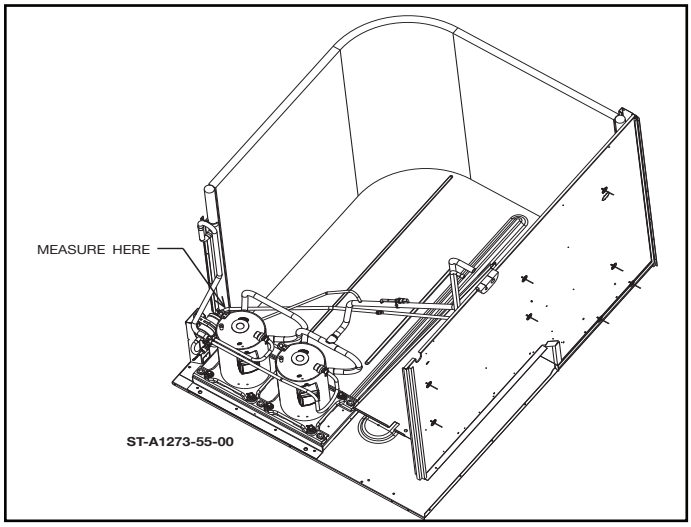

J.4.3. Measuring Compressor Electrical Loads

See ***Appendix B*** towards the end of this manual for Compressor Electrical Data.

J.5. Checking Heating Operation

J.5.1. Gas Furnace

J.5.1.1. Measuring and Adjusting Supply Gas Pressures

The maximum gas inlet pressure to the furnace should be 10.5” WC for natural gas and 13.0” WC for LP gas the minimum gas inlet pressure for purposes of input adjustments to the furnace should be 5.0” WC for natural gas and 11.0” WC for LP gas.

The inlet pressure tap is on the input side of the gas valve. A calibrated manometer is required to measure gas pressure readings accurately.

1. Ensure the gas is shut off to the furnace at the manual gas valve installed outside the unit.

2. Remove the inlet pressure tap plug using a 3/16” allen wrench; see Figure G.1.4. –A.

3. Install a 1/8” NPT pressure tap fitting and tighten using a 7/16” open end wrench.

4. Connect manometer using 1/4” I.D. hose over the pressure tap fitting.

5. Turn on the gas supply and operate the furnace and all other gas-fire units on the same gas line as the furnace.

6. Note or adjust the inlet gas pressure to give:
   A: 5” - 10.5” W.C. for natural gas
   B: 11” - 13” W.C. for LP gas

J. STARTUP AND OPERATION

7. Shut off the gas at the manual gas-valve a remove the manometer and hose.

8. Replace 1/8" NPT pressure tap fitting with the pressure tap plug and tighten using a 3/16" allen wrench.

9. Turn ON the gas supply and check for gas leaks using an approved leak detector. Do NOT use a flame of any kind to check for leaks. Repair any leaks and repeat.

If the supply gas inlet pressure is above the specified ranges, install an in-line gas regulator to the furnace for the natural gas units. For LP gas furnace, have the LP supplier reduce the inlet pressure at the regulator.

If the supply gas inlet pressure is below the specified ranges, either remove the restrictions in the gas supply piping or enlarge the gas pipe for a natural gas furnace; see ***Table G.1.6. - A.*** For LP gas furnaces have the LP supplier adjust the inlet pressure at the regulator; see ***Table G.3. - A***.

J.5.1.2. Measuring and Adjusting Manifold Gas Pressures

The manifold pressure should be set at 3.5" WC high fire, 1.7" WC low fire, for natural gas and 10.0" W.C. high fire and 4.9" W.C. low fire for LP gas. Only small variations in the gas flow should be made by means of the pressure regulator adjustment. In no case should the final manifold pressure vary more than ± 0.3" WC for natural gas and ± 0.5" WC for LP gas from the above specified pressures.

1. Ensure the gas is shut off to the furnace at the manual gas valve installed outside the unit.

2. Remove the manifold pressure tap plug using a 3/16" allen wrench; see ***Figure G.1.4. – A.***

3. Install a 1/8" NPT pressure tap fitting and tighten using a 7/16" open end wrench.

4. Connect manometer using 1/4" I.D. hose over the pressure tap fitting.

4. Turn on the gas supply and operate the furnace by applying a heat call

5. Note or adjust the manifold gas pressure to give:

C. 3.5" (± 0.3") W.C. high fire, 1.7" (± 0.3") W.C low fire for natural gas

D. 10.0" (± 0.5")W.C. high fire and 4.9" (± 0.5) W.C. low fire for LP gas

6. To adjust the pressure regulators, remove adjustment screw cover.

7. Using the 3/32'allen wrench, turn the adjustment screw clockwise increase pressure, or counterclockwise to decrease the outlet pressure.

8. Replace the adjustment screw cover.

9. Shut off the gas at the manual gas-valve a remove the manometer and hose.

10. Replace 1/8" NPT pressure tap fitting with the pressure tap plug and tighten using a 3/16" allen wrench.

11. Turn ON the gas supply and apply a heat call to the furnace. Then check for gas leaks using an approved leak detector. Do NOT use a flame of any kind to check for leaks.

Repair any leaks and repeat.

METER TIME IN MINUTES AND SECONDS FOR NORMAL INPUT RATING OF FURNACE QUIPPED FOR NATURAL GAS									
INPUT (BTU/HR)	METER SIZE (FT^3/REV)	HEATING VALUE OF GAS (BTU/FT^3)							
		900		1000		1050		1100	
		MIN	SEC	MIN	SEC	MIN	SEC	MIN	SEC
75,000	ONE	0	43	0	48	0	50	0	53
	TEN	7	12	8	0	8	24	8	48
100,000	ONE	0	32	0	36	0	38	0	40
	TEN	5	24	6	0	6	18	6	36
120,000	ONE	0	27	0	30	0	32	0	33
	TEN	4	30	5	0	5	15	5	30
RATE (BTU/HR) = HEATING VALUE OF GAS X 3600 / TIME (IN SECONDS) FOR 1 CUBIC FOOT OF GAS									

J.5.1.3. Verifying BTU Performance and Capacity

Checking furnace input is important to prevent over-firing beyond its design rated input.

NEVER SET INPUT ABOVE THAT SHOWN ON THE RATING PLATE FOR ELEVATIONS UP TO 2,000 FT. Use the following table or formula to determine input rate. Start the furnace and measure the time required to burn on cubic foot of gas. Prior to checking the furnace input, make certain that all other gas appliances are shut off, with the exception of pilot burners.

Time the meter with only the furnace in operation.

The factory installed orifice o n a f urnace a re sized for natural gas having a heating value of 1050 BTU/cu.ft and a specific gravity of 0.60. Since heating values vary geographically, the manifold pressure and/or gas orifice s ize may need to be changed to adjust the furnace to its nameplace input. Consult the local gas utility to obtain the yearly average heating value. Refer to section ***G.4.2.6. Orifice Selection and High Altitude Adjustments*** for more info.

NOTE: Refer to the High Altitute Section of this manual and the National Fuel Gas Code for high altitude rate adjustement above 2,000 ft.

To change the orifice spuds, s hut t he manual gas-valve and remove the gas manifold. Replace all the orifice with correct sizes based on the Orifice Selection Charts, a nd c arefully replace the manifold in its position.

J.5.1.4. To Shut Down Furnace

1. Set the thermostat to the lowest setting.

2. Turn off all electric power to the appliance if service is to be performed.

3. Remove control door.

4. Move control switch/knob on the gas valve to the “OFF” position.

5. Replace control door.

⚠WARNING: SHOULD OVERHEATING OCCUR OR THE GAS SUPPLY FAIL TO SHUT OFF, SHUT OFF THE MANUAL GAS VALVE TO THE APPLIANCE BEFORE SHUTTING OFF THE ELECTRICAL SUPPLY. FAILURE TO DO SO CAN RESULT IN AN EXPLOSION OR FIRE CAUSING PROPERTY DAMAGE, SEVERE PERSONAL INJURY OR DEATH!

J.5.1.5. Checking Air Temperatures

The importance of proper air flow over the heat exchanger cannot be over emphasized. One of the most commom causes of heat exchanger failure is over-heating due to low air flow.

To determine whether the heating air flow is correct, follow the steps to check the temperature rise.

1. Insert a thermometer in the supply air duct as close to the furnace as possible yet out of a direct line from the heat exchanger. (See ***Figure J.3. – A: Static Pressure and Air Temp Measurement Location***)

2. Insert a thermometer in the return air duct as close to the filters as possible.

3. Operate the furnace for a minimum of 15 minutes in the gas heat mode.

4. When the thermometer in the supply air duct stops rising (approximaterly five minutes), subtract the return air temperature from the supply air temperature. The difference is the temperature rise.

5. Compare the measured temperature rise to the approved temperature rise range listed on the furnace name plate or in ***Appendix E: Heating Performance***.

If the measured temperature rise is above the approved range, the air flow is too low. Airflow must be increased by removing the restrictions in the duct system, or by changing the air flow. If the measured temperature rise is below the approved range, the air flow is too much. Check the duct sizing or see Section ***J.3.2. Air Flow Measurements and Adjustments***.

IMPORTANT: Some high-efficiency filters have a greater than normal resistance to airflow. This can adversely affect furnace operation. **BE SURE TO CHECK THE AIRFLOW** if using any filter other than the factory-provided filter.

K. TEST AND BALANCE

K.1. Air Flow Charts and Information

See ***Appendix C*** towards the end of this manual for Air Flow Performance Data.

K.2. Air Flow Adjustments

K.2.1. Blower Speed for 7.5-12.5 Ton Units

See ***Section J.3.2. Air Flow Measurements and Adjustments*** on how to increase the blower speed and increase airflow for the 7.5-12.5T units.

K.2.2. Economizer Adjustments

Do not Fix a minimum postion on an economizer, set the minimum position through the control board only. See the instructions provided with the economizer for more info. The part numbers for these instructions are listed in section ***D.4.1. Economizer Information.***

M. HUMIDITY CONTROL

M.1 Dehumidification System Information

With the factory installed dehumidification option, in addition to a thermostat or space temperature sensor that is normally present, an indoor relative humidity sensor is installed in the occupied space and connected to the Rooftop Unit Controller (RTU-C) which then controls the capacity of the cooling coil to remove moisture from the supply air and maintain space relative humidity below an adjustable limit visible on the RTU-C display.

The default value is the ASHRAE recommended limit of 60% RH. With this option, a refrigerant reheat coil is installed downstream from the evaporator coil. When the space humidity is too high and reheat is energized, this coil uses some of the heat that is normally rejected to the outside by the condenser coil to instead reheat the cold air from the evaporator coil just enough to avoid overcooling the space. Providing "neutral air" to the occupied space.

Because the demand for dehumidification can be different from the cooling demand, the unit will first satisfy the demand for cooling and then if the space humidity is still too high, dehumidification mode is energized. When in dehumidification mode, the supply air leaving the unit will be near the entering air temperature, but at a much lower humidity. The unit will exit the dehumidification mode when the humidity set point is satisfied; or if the load is increased, it will return to normal cooling mode.

Reheat is not available during the gas-heating mode.

Figure M.1. - A

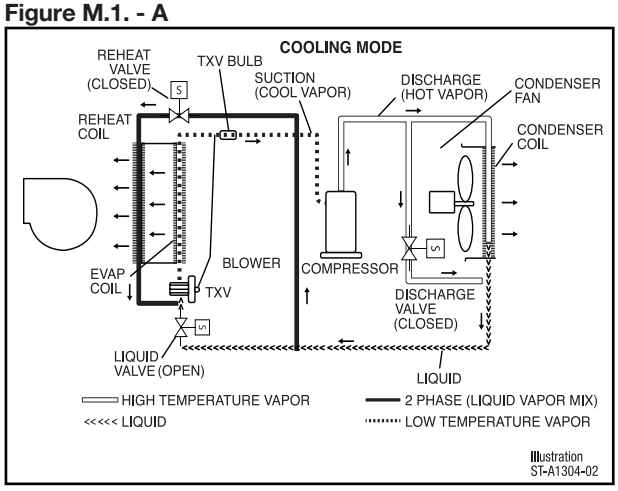

Figure M.1. - A shows the refrigerant path during the normal cooling mode. The liquid refrigerant leaves the TXV with the sudden pressure drop causing the liquid to expand to a vapor and absorbing the heat from the supply air going through the evaporator coil. The refrigerant vapor then travels to the compressor where it is elevated to a higher pressure and temperature.

The superheated refrigerant vapor next carries the heat to the outside coil where the heat is then rejected and the refrigerant condenses into a subcooled liquid where the process repeats itself.

Figure M.1. – B

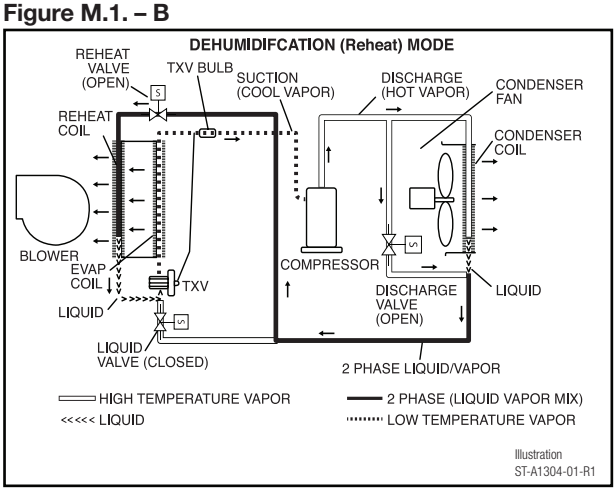

Figure M.1. - B shows the refrigerant path during the reheat mode. When the reheat cycle is energized by the RTU-C, the reheat solenoid valve, upstream of the reheat coil opens. The liquid solenoid valve ahead of the TXV, closes. The discharge solenoid valve, in the compressor discharge line, opens. The liquid refrigerant leaves the TXV with the sudden pressure drop causing the liquid to expand to a vapor and absorbing the heat from the supply air going through the evaporator coil. The refrigerant vapor then travels to the compressor where it is elevated to a higher pressure and temperature. The refrigerant next carries the heat to a parallel path between the outside condenser coil and a bypass circuit. Some of the heat is rejected outdoor. The ratio of heat rejected outdoors versus indoors is controlled by an outdoor fan motor controller (OFMC) that monitors the two phase temperature and varies the fan speed. This 2-phase refrigerant vapor is then sent to the reheat coil. As the refrigerant travels through the reheat coil is condenses into a subcooled liquid where the process repeats itself.

M. HUMIDITY CONTROL

M.2 Humidity Sensor Installation

The Humidity control unit requires the use of a zone mounted humidity sensor. The sensor should be located in the conditioned space, approximately 5ft from the floor, on an interior wall. Take care to locate it away from direct sunlight and away from air flow from vents or drafts from doors. The humidity sensors output is a 0-10VDC signal and will be connected to the DDC Control.

The ZNS-5 meets the requirement and includes an optional space temperature sensor. The control wiring should be a minimum of 18AWG Solid Copper wire with 5 Conductors and is connected from the DDC Control to the sensor as follows:

RED = R to V+ (+24VAC)

GREEN = Field Confg 1 & 2 (Right most terminal) to GROUND

BLUE = Field Config 2 (3rd terminal from right) to VOut

WHITE = S & P (Left most terminal) to Temp -

YELLOW = S (2nd terminal from left) to Temp+

See the installation instructions for additional details.

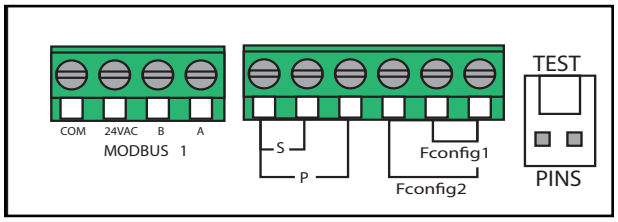

ZNS-5 HUMIDITY/TEMPERATURE SENSOR

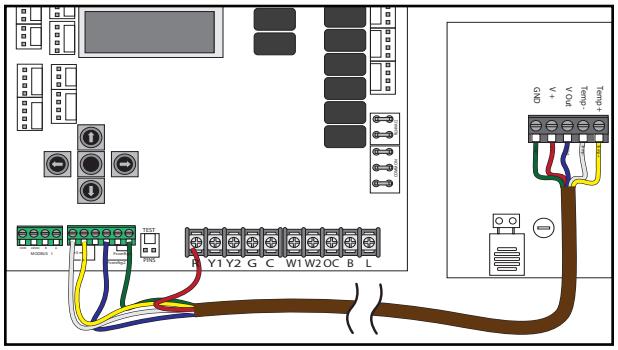

HONEYWELL DUCT MOUNTED HUMIDITY SENSOR

This optional wires the same except the temperature sensor connects

directly to a Honeywell Thermostat.

RED = R to V+ (+24VAC)

GREEN = Field Confg 1 & 2 (Right most terminal) to GROUND

BLUE = Field Config 2 (3rd terminal from right) to VOut

Other = Honeywell S- Terminal to Yellow Wire

Other = Honeywell S+ Terminal to Green Wire

See the installation instructions for additional details.

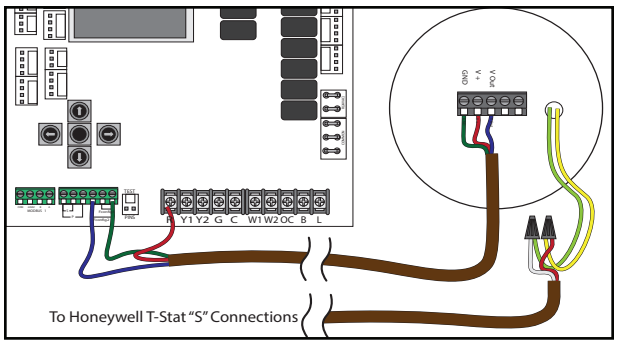

M. HUMIDITY CONTROL

M.3 Humidity Control Settings and Configuration

The Clear Control is designed to operate in conjunction with the zone sensor discussed earlier in the guide. These are the steps to verify the zone sensor and adjust the humidity set-point and operating modes. The system can be programmed to a humidity level as low as 35%, and can be set to run dehumidification as part of the cooling cycle or as a stand alone system regardless of the cooling or fan call status from the thermostat, recommended.

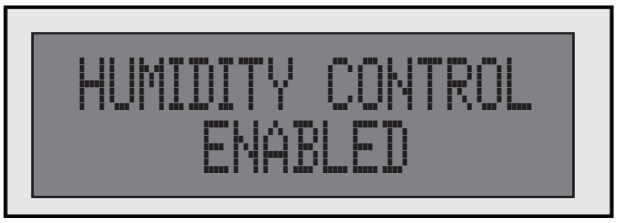

NOTICE: The system will not operate the humidity control when the outdoor ambient temperature is below 60°F, this is because the humidity control uses hot refrigerant bypassed from the outdoor coil,. When the ambient temperature is too low, insufficient heat will be retained in the refrigerant to properly operate the Reheat system for proper dehumidification. The Reheat system in this packaged unit is not designed for industrial or process applications, it is intended for human comfort zones.

Navigate through the Clear Control menu to “Humidity Control” it should say Enabled. If it says “Disabled” press the Enter button twice to Enable rh Control.

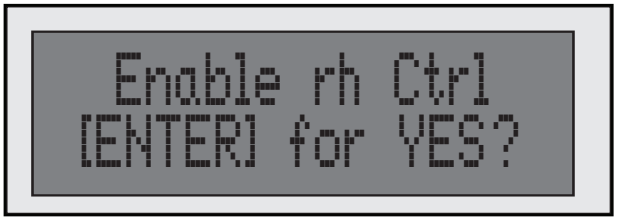

Next set the desired Relative Humidity Set-point. This set-point will be where the control will run the associated dehumidification cycles to bring the humidity in the zone down to this percentage.



Now set the Reheat Mode, there are three functions to choose from, Reheat in Occupied, will only run dehumidification when there is a Fan or Cooling Call. Reheat in Unoccupied, will on run dehumidification when there is no fan or cooling call; Reheat ALL, (recommended) will run reheat based on the humidity reading regardless of the thermostat operation.



Checking the Humidity Sensor reading, Navigate to Humidity Control then down to Indoor rh, this will display the reading from the humidity zone sensor. If this shows “4%” then it means that the zone sensor is not connected properly or malfunctioning.

Verify a 0-10VDC signal across the Field Cnfg 2 terminals on the control board. 10VDC = 100%, 5VDC - 50%.



The humidity control system is also equipped with an Outdoor Fan Motor Controller, OFMC, this controller changes the speed of the outdoor fans to allow for more or less heat in the bypassed refrigerant used to operate the reheat system. Adjustments to the OFMC are not needed unless undesirable operation occurs.

Consult the Installation instructions provided with the system for details on the OFMC operation and adjustments.

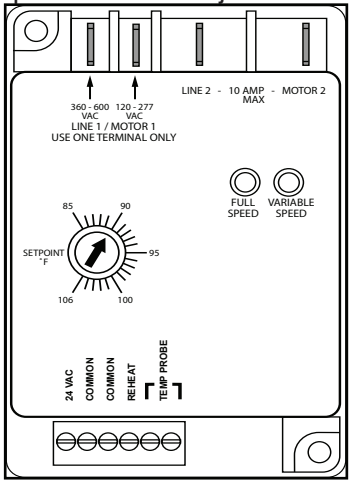

OFMC	
Factory Settings	
Unit	Setpoint
90	90°
102	90°
120	94°

N. DIAGNOSTICS

N.1. Diagnostics Chart

N.1.1.Cooling Diagnostics Chart

⚠ WARNING

DISCONNECT ALL POWER TO UNIT BEFORE SERVICING. CONTACTOR MAY BREAK ONLY ONE SIDE. FAILURE TO SHUT OFF POWER CAN CAUSE ELECTRICAL SHOCK RESULTING IN PERSONAL INJURY OR DEATH.

SYMPTOM	POSSIBLE CAUSE	REMEDY
Unit will not run	• Power off or loose electrical connection • Thermostat out of calibration-set too high • Defective contactor • Blown fuses • Transformer defective • High pressure control open (if provided) • Interconnecting low voltage wiring damaged	• Check for correct voltage at compressor contactor in control box • Reset • Check for 24 volts at contactor coil - replace if contacts are open • Replace fuses • Check wiring-replace transformer • Reset-also see high head pressure remedy- • Replace thermostat wiring"
Condenser fan runs, compressor doesn't	• Run capacitor defective (single phase only) • Loose connection • Compressor stuck, grounded or open motor winding open internal overload. • Low voltage condition	• Replace • Check for correct voltage at compressor - check & tighten all connections • Wait at least 2 hours for overload to reset. If still open, replace the compressor. At compressor terminals, voltage must be within 10% of rating plate volts when unit is operating."
Insufficient cooling	• Improperly sized unit • Improper airflow • Incorrect refrigerant charge • Air, non-condensibles or moisture in system • Incorrect voltage	• Recalculate load • Check - should be approximately 400 CFM [188.78 L/s] per ton. • Charge per procedure attached to unit service panel. • Recover refrigerant, evacuate & recharge, add filter drier • At compressor terminals, voltage must be within 10% of rating plate volts when unit is operating."
Compressor short cycles	• Incorrect voltage • Defective overload protector • Refrigerant undercharge	• At compressor terminals, voltage must be ± 10% of nameplate marking when unit is operating. • Replace - check for correct voltage • Add refrigerant
Registers sweat	• Low evaporator airflow • Room thermostat set too low	• Increase speed of blower or reduce restriction - replace air filter • Raise thermostat set point
High head-low vapor pressures	• Restriction in liquid line, expansion device or filter drier • Flow check piston size too small • Incorrect capillary tubes	• Remove or replace defective component • Change to correct size piston • Change coil assembly
High head-high or normal vapor pressure - Cooling mode	• Dirty condenser coil • Refrigerant overcharge • Condenser fan not running • Air or non-condensibles in system	• Clean coil • Correct system charge • Repair or replace • Recover refrigerant, evacuate & recharge
High head-high or normal vapor pressure - Heating mode	• Low air flow - condenser coil • Refrigerant overcharge • Air or non-condensibles in system • Dirty condenser coil	• Check filters - correct to speed • Correct system charge • Recover refrigerant, evacuate & recharge • Check filter - clean coil
Low head-high vapor pressures	• Defective Compressor valves	• Replace compressor
Low vapor - cool compressor - iced evaporator coil	• Low evaporator airflow • Operating below 65°F outdoors • Moisture in system • Liquid line limiting refrigerant flow	• Increase speed of blower or reduce restriction - replace air filter • Add Low Ambient Kit • Recover refrigerant - evacuate & recharge - add filter drier • Replace drier
High vapor pressure	• Excessive load • Defective compressor	• Recheck load calculation • Replace
Fluctuating head & vapor pressures	• Severe overcharge • Air or non-condensibles in system	• Adjust refrigerant charge • Recover refrigerant, evacuate & recharge
Gurgle or pulsing noise at expansion device or liquid line	• Air or non-condensibles in system	• Recover refrigerant, evacuate & recharge

N.2. Alarm Codes – Full List

Alarm Codes		
CODE	**Description**	**FAULT LEVEL**
0	STAND BY	None
c	COMPRESSOR ON - Low (Flashing if in time delay)	None
C	COMPRESSOR ON - High (Flashing if in time delay)	None
E	Economizer Cooling - No Compressor	None
F	CONTINUOUS FAN	None
h	GAS HEAT ON - LOW-FIRE	None
H	GAS HEAT ON -HIGH-FIRE	None
4	Comfort Alert Code 4 for Compressor Circuit 1	Shutdown
5	Comfort Alert Code 5 for Compressor Circuit 1	Shutdown
6	Comfort Alert Code 6 for Compressor Circuit 1	Shutdown
7	Comfort Alert Code 7 for Compressor Circuit 1	Shutdown
8	Comfort Alert Code 8 for Compressor Circuit 1	Shutdown
9	Comfort Alert Code 9 for Compressor Circuit 1	Shutdown
11	FAILED IGNITION	Problem
12	LO FLAME SENSE	Warning
13	FLAME LOST	Problem
14	UNEXPECTED FLAME	Shutdown
15	2ND STAGE GAS VALVE IMPOPER VOLTAGE	Problem
20	REFRIGERANT LOW PRESSURE SWITCH OPEN - CIRCUIT 1	Problem
21	REFRIGERANT LOW PRESSURE SWITCH OPEN - CIRCUIT 2	Problem
22	MAIN LIMIT OPEN	Problem
29	REFRIGERANT HIGH PRESSURE SWITCH OPEN - CIRCUIT 1	Problem
30	REFRIGERANT HIGH PRESSURE SWITCH OPEN - CIRCUIT 2	Problem
33	MRLC (Rollout Limit) OPEN	Problem
34	Comfort Alert Code 4 for Compressor Circuit 2	Shutdown
35	Comfort Alert Code 5 for Compressor Circuit 2	Shutdown
36	Comfort Alert Code 6 for Compressor Circuit 2	Shutdown
37	Comfort Alert Code 7 for Compressor Circuit 2	Shutdown
38	Comfort Alert Code 8 for Compressor Circuit 2	Shutdown
39	Comfort Alert Code 9 for Compressor Circuit 2	Shutdown
42	Invalid Thermostat Selection	Warning
44	1ST. STAGE COMBUSTION PRESS SWITCH CLOSED	Problem
46	1ST. STAGE COMBUSTION PRESS SWITCH OPEN	Problem
49	FREEZE SWITCH OPEN - CIRCUIT 1	Problem
50	FREEZE SWITCH OPEN - CIRCUIT 2	Problem
55	2nd stage COMBUSTION PRESSURE SWITCH CLOSED	Problem
57	2ND STAGE COMBUSTION PRESSURE SWITCH OPEN	Problem, s hutdown
59	Condensate Drain Plugged	Shutdown
61	BLOWER FAULT - NO RUN	Shutdown
83	Condenser Coil Temp Sensor Fail-OAT	Problem
84	Outdoor Air Temperature Sensor Fail-OAT	Problem
88	Emergency Stop Fault	Shutdown
93	CONTROL Fault	Shutdown
97	Smoke Detection	Shutdown

N. DIAGNOSTICS

N.2.1. Cooling Alarm Codes and Diagnostics

All Core Command come standard with a 7-segment diagnostic display. During standby mode with no fault codes present, the display will read “0” (zero). During normal thermostat heating, cooling or continuous fan operation, a letter will be displayed to describe the mode of operation as follows:

C = Cooling

F = Continuous Fan Operation

H = Gas Heating Operation

When the control senses a fault present, it will display a code to help in diagnoses. A list of normal operating codes and potential fault codes follows:

Alarm Codes - Cooling Only		
CODE	**DESCRIPTION**	**FAULT LEVEL**
0	Standby	None
c	Compressor On – Low (Flashing If In Time Delay)	None
C	Compressor On – High (Flashing If In Time Delay)	None
E	Economizer Cooling – No Compressor	None
F	Continuous Fan	None
4	Comfort Alert Code 4 For Compressor Circuit 1	Shutdown
5	Comfort Alert Code 5 For Compressor Circuit 1	Shutdown
6	Comfort Alert Code 6 For Compressor Circuit 1	Shutdown
7	Comfort Alert Code 7 For Compressor Circuit 1	Shutdown
8	Comfort Alert Code 8 For Compressor Circuit 1	Shutdown
9	Comfort Alert Code 9 For Compressor Circuit 1	Shutdown
20	Refrigerant Low Pressure Switch Open – Circuit 1	Problem
29	Refrigerant High Pressure Switch Open – Circuit 1	Problem
49	Freeze Switch Open – Circuit 1	Problem
59	Condensate Drain Plugged	Shutdown
83	Condenser Coil Temp Sensor Fail-Oct	Problem
84	Outdoor Air Temperature Sensor Fail-Oat	Problem
88	Emergency Stop Fault	Shutdown
93	Control Fault	Shutdown
97	Smoke Detection	Shutdown

The method for displaying a two-digit fault is to display the first digit for one second immediately followed by the second digit – which is also displayed for a duration of one second. A ½ second pause is then displayed. Cycle repeats until the fault is cleared. Each fault is flashed (displayed) a minimum of two times even if the fault condition has cleared before the fault can be displayed twice.

Normal Operation Mode:

0	Displayed anytime there is no fault present and no thermostat call present
c	COMPRESSOR ON - Low (Flashing if in time delay)
C	COMPRESSOR ON - High (Flashing if in time delay)
E	When the system uses Economizer Cooling with No Compressor
F	Displayed anytime thermostat calls for continuous fan

Fault Codes with Descriptions and Solutions:

Alarm Codes - Cooling Only		
CODE	**DESCRIPTION**	**FAULT LEVEL**
0	STANDBY	None
c	COMPRESSOR ON – Low (Flashing if in time delay)	None
C	COMPRESSOR ON – High (Flashing if in time delay)	None
E	Economizer Cooling – No Compressor	None
F	CONTINUOUS FAN	None
4	**Comfort Alert Code 4 for Compressor Circuit 1**	Shutdown
	ALARM Designation: Locked Rotor Circuit 1	
	DESCRIPTION:	
	1. Circuit 1 shutdown and retry after Anti-Short Cycle Delay (ASCD) Maximum is 3 attempts.	
	SOLUTION/STATUS/Possible - Troubleshooting Information	
	1. Low line voltage	
	2. Excessive Refrigerant in compressor	
	3. Seized bearings in compressor	
5	**Comfort Alert Code 5 for Compressor Circuit 1**	Shutdown
	ALARM Designation: Open Circuit 1	
	DESCRIPTION:	
	1. Circuit 1 shutdown and retry after ASCD. Note: This alarm is sent by the Comfort Alert Module only after the fault has been sensed for a minimum of 4 hours.	
	SOLUTION/STATUS/Possible - Troubleshooting Information	
	1. Condensing unit power disconnect is open	
	2. Compressor circuit breaker or fuses are open	
	3. Compressor contactor has failed open High pressure switch is open and requires manual reset	
	4. Broken supply wires or connector is notmaking contact	
	5. Unusually long compressor protector reset time due to extreme ambient temperature	
	6. Compressor windings are damaged	
6	**Comfort Alert Code 6 for Compressor Circuit 1**	Shutdown
	ALARM Designation: Missing Phase Circuit 1	
	DESCRIPTION:	
	1. Circuit 1 shutdown	
	SOLUTION/STATUS/Possible - Troubleshooting Information	
	1. Compressor fuse is open on one phase	
	2. Broken wire or connector on one phase	
	3. Compressor motor winding is damaged	
	4. Utility supply has dropped one phase	

N. DIAGNOSTICS

Fault Codes with Descriptions and Solutions:

Alarm Codes - Cooling Only		
CODE	**DESCRIPTION**	**FAULT LEVEL**
7	**Comfort Alert Code 7 for Compressor Circuit 1**	Shutdown
	ALARM Designation: Reverse Phase Circuit 1	
	DESCRIPTION:	
	1. Run outdoor and indoor fans continuously for circuit 1 and change mode of operation to Unoccupied Auto. This procedure prevents the Space Temperature from reaching extreme values.	
	SOLUTION/STATUS/Possible - Troubleshooting Information	
	1. Compressor running backward due to supply phase reversal	
8	**Comfort Alert Code 8 for Compressor Circuit 1**	Shutdown
	ALARM Designation: Welded Contactor Circuit 1	
	DESCRIPTION:	
	1. Circuit 1 shutdown	
	SOLUTION/STATUS/Possible - Troubleshooting Information	
	1. Compressor contactor has failed closed	
	2. Thermostat demand signal not connected to module	
9	**Comfort Alert Code 9 for Compressor Circuit 1**	Shutdown
	ALARM Designation: Low Voltage Circuit 1	
	DESCRIPTION:	
	1. Circuit 1 Shutdown and wait for voltage to return to operational levels.	
	SOLUTION/STATUS/Possible - Troubleshooting Information	
	1. Control circuit transformer is overloaded	
	2. Low line voltage to compressor	
20	**DESCRIPTION:** REFRIGERANT LOW PRESSURE SWITCH OPEN – CIRCUIT 1	Problem
	CAUSE:	
	1. Low evaporator airflow	
	2. Refrigerant undercharge	
	3. Restriction in liquid line, expansion device or filter drier	
	4. Operating below 65°F outdoors	
	5. Moisture in system	
	SOLUTION: The solution will depend on the cause.	
	1. Increase speed of blower or reduce restriction - replace air filter filter	
	2. Check for leaks - add refrigerant	
	3. Remove or replace defective component	
	4. Add Low Ambient Kit	
	5. Recover refrigerant - evacuate & recharge - add or replace filter drier	

Fault Codes with Descriptions and Solutions:

Alarm Codes - Cooling Only		
CODE	**DESCRIPTION**	**FAULT LEVEL**
29	**DESCRIPTION:** REFRIGERANT HIGH PRESSURE SWITCH OPEN – CIRCUIT 1	Problem
	CAUSE:	
	1. Restriction in liquid line, expansion device or filter drier	
	2. Refrigerant overcharge	
	3. Condenser fan not running	
	4. Air or non-condensibles in system	
	SOLUTION: The solution will depend on the cause.	
	1. Recover refrigerant - evacuate & recharge remove or replace defective component	
	2. Remove refrigerant	
	3. Check voltage, Run Capacitor & Outdoor Motor Repair or replace	
	4. Recover refrigerant, evacuate & recharge	
49	**FREEZE SWITCH OPEN – CIRCUIT 1**	Problem
	DESCRIPTION:	
	1. Occurs when sensors are either open or shorted.	
	SOLUTION: The solution will depend on the cause.	
	1. Replace the sensor	
	2. Check sensor Is installed correctly on control	
59	**Condensate Drain Plugged**	Shutdown
	DESCRIPTION:	
	1. Condensate line is blocked water inside of unit	
	SOLUTION: The solution will depend on the cause.	
	1. Remove blockage	
	2. Remove condensate pan and clean	
83	**Condenser Coil Temp Sensor Fail-OCT**	Problem
	DESCRIPTION:	
	1. No defrost operation, but unit continues to operate in either heating or cooling.	
	SOLUTION: The solution will depend on the cause.	
	1. Extreme temperatures	
	2. Replace the sensor	
	3. Check that sensor is installed correctly on control	

N. DIAGNOSTICS

Fault Codes with Descriptions and Solutions:

Alarm Codes - Cooling Only		
CODE	**DESCRIPTION**	**FAULT LEVEL**
84	**Outdoor Air Temperature Sensor Fail-OAT**	Problem
	DESCRIPTION:	
	1. No defrost operation, but unit continues to operate in either heating or cooling.	
	2. The heat source continues to be heat pump, independently of the outdoor air temperature	
	SOLUTION: The solution will depend on the cause.	
	1. Extreme temperatures	
	2. Replace the sensor	
	3. Check that sensor is installed correctly on control	
88	**Emergency Stop Fault**	Shutdown
	DESCRIPTION:	
	1. Complete shutdown	
	SOLUTION: The solution will depend on the cause.	
	1. Cannot be cleared by the 'Clear All Alarms" command. Must be cleared by changing the Emergency Stop Fault network value.	
93	**CONTROL Fault**	Shutdown
	DESCRIPTION:	
	1. Internal Control fault.	
	SOLUTION: The solution will depend on the cause.	
	1. Replace Control	
91	**Smoke Detection**	Shutdown
	DESCRIPTION:	
	1. RTU-C reads the smoke detection input as open -- complete shutdown.	
	SOLUTION: The solution will depend on the cause.	
	1. If not due to a fire, Replace the sensor, Check sensor is in stalled correctly on control	
	2. Check Smoke Detection Circuit, if no Smoke Detector is installed, ensure Economizer Smoke Bypass plug is installed	

N.2.2. Heating Alarm Codes and Diagnostics

All Core Command come standard with a 7-segment diagnostic display. During standby mode with no fault codes present, the display will read “0” (zero). During normal thermostat heating, cooling or continuous fan operation, a letter will be displayed to describe the mode of operation as follows:

C = Cooling

F = Continuous Fan Operation

H = Gas Heating Operation

When the control senses a fault present, it will display a code to help in diagnoses. A list of normal operating codes and potential fault codes follows:

Alarm Codes - Heating Only		
CODE	**DESCRIPTION**	**FAULT LEVEL -0, 1, 2, 3***
0	STANDBY	None
F	CONTINUOUS FAN	None
h	GAS HEAT ON - LOW-FIRE	None
H	GAS HEAT ON - HIGH-FIRE	None
11	FAILED IGNITION	Problem
12	LO FLAME SENSE	Warning
13	FLAME LOST	Problem
14	UNEXPECTED FLAME	Shutdown
15	HIGH-FIRE GAS VALVE IMPROPER VOLTAGE	Problem
22	MAIN LIMIT OPEN	Problem
33	MRLC (Rollout Limit) OPEN	Problem
42	INVALID THERMOSTAT SELECTION	Warning
44	LOW-FIRE NEGATIVE PRESSURE CONTROL CLOSED	Problem
46	LOW-FIRE NEGATIVE PRESSURE CONTROL OPEN	Problem
55	High-Fire NEGATIVE PRESSURE CONTROL CLOSED	Problem
57	HIGH-FIRE NEGATIVE PRESSURE CONTROL OPEN	Problem, Shutdown
61	BLOWER FAULT - NO RUN	Shutdown
97	SMOKE DETECTION	Shutdown

The method for displaying a two-digit fault is to display the first digit for one second immediately followed by the second digit – which is also displayed for a duration of one second. A ½ second pause is then displayed. Cycle repeats until the fault is cleared. Each fault is flashed (displayed) a minimum of two times even if the fault condition has cleared before the fault can be displayed twice.

Normal Operation Mode:

0	Displayed anytime there is no fault present and no thermostat call present
F	Displayed anytime thermostat calls for continuous fan
h	Lower-case “h” displayed anytime thermostat calls for low-fire heat
H	Upper-case “H” displayed anytime thermostat calls for high-fire heat

N. DIAGNOSTICS

Fault Codes with Descriptions and Solutions:

Alarm Codes - Heating Only	
CODE	**FAILED IGNITION**
11	**DESCRIPTION:** This fault is displayed when a failed ignition has occurred three times in a row. The Core Command will enter a one-hour lockout following the third ignition attempt.
	CAUSE:
	1. Flame sense rod is unable to sense flame
	2. Gas valve is turned OFF.
	3. The ignitor is not working properly.
	4. The Core Command is not working properly
	5. Burner flame is not carrying over from first burner to the last.
	SOLUTION: the solution will depend on the cause.
	1. Clean or replace flame sense rod. Confirm flame sense is in burner flame. Check wire and all connections between flame sense and Core Command. Make sure furnace is properly grounded.
	2. Turn gas valve ON.
	3. Replace or reposition the ignitor. Refer to section G.1.4 for proper ignitor location. Check wire and all connections between ignitor and Core Command.
	4. Replace furnace Core Command.
	5. Check manifold pressure during ignition (see Measuring and Adjusting Manifold Gas Pressures section). Watch the burner during ignition if the first burner lights but the second, third and so on do not light (incomplete carry-over), the burner may need to be replaced.
12	**LOW FLAME SENSE**
	DESCRIPTION: Furnace operation will continue in low and high-fire modes. This problem may be elevated to the level of fault code “13” or “11” if flame cannot be sensed at all.
	CAUSE:
	1. Most common cause is that the flame sense rod may need cleaning.
	2. Flame sense rod may not be properly connected.
	3. Wiring between the rod and furnace control may be shorted or opened.
	SOLUTION:
	1. Clean or replace flame sense rod.
	2. Check wire and all connections between the flame sense and Core Command.
	3. Make sure the furnace is properly grounded.

Fault Codes with Descriptions and Solutions:

Alarm Codes - Heating Only	
CODE	**FLAME LOST**
13	**DESCRIPTION:** if flame is lost after it is established, subsequent ignition attempts will follow and normal operation should resume.
	CAUSE:
	1. Most common cause is that the flame sense rod may need cleaning.
	2. My not be properly connected.
	3. Wiring between flame sense and Core Command may be shorted or opened.
	4. Improperly mounted
	5. Improperly grounded.
	6. Burner flame pattern may be unstable.
	SOLUTION:
	1. Clean or replace the flame sense rod.
	2. Check wire and all connections between the flame sense and Core Command.
	3. Confirm flame sense rod is in the flame. See section G.1.4 for proper flame sense location.
	4. Confirm furnace is properly grounded.
	5. Check that all burner assembly components are properly installed. Confirm that burner flame is steady and directed down the center of tube. If turbulence is noted, check for air leaks between the burner and blower compartment.
14	**UNEXPECTED FLAME**
	DESCRIPTION: this fault should rarely if ever be seen in the field. Furnace will not operate with this fault present.
	CAUSE:
	1. Field mis-wiring of 24VAC to the gas valve main solenoid.
	2. Faulty gas valve stuck in the “OPEN” position.
	3. Faulty furnace Core Command (signal improperly sensed when it should not be sensed at all).
	SOLUTION:
	1. Correct wiring
	2. Replace the gas valve.
	3. Replace the Core Command.
15	**HIGH-FIRE GAS VALVE IMPROPER VOLTAGE**
	DESCRIPTION: High-fire coil energized during call for low-fire heat. This fault should rarely if ever be seen in the field.
	CAUSE: Gas valve relay contacts on Core Command welded shut. Hi and low-fire miswired.
	SOLUTION:
	1. Replace Core Command if gas valve wiring is correct
	2. Turn off power to unit. Use a pin remover to reverse locations for BLUE and WHITE/BLACK wires in 3-pin connector.

N. DIAGNOSTICS

Fault Codes with Descriptions and Solutions:

Alarm Codes - Heating Only	
CODE	**MAIN LIMIT OPEN**
22	**DESCRIPTION:** The furnace will not operate in gas heat mode.
	CAUSE:
	1. No airflow or dead blower
	2. Insufficient airflow
	3. Faulty limit control
	4. Loose or faulty wiring.
	5. Incorrect blower tap
	6. Furnace input is too high.
	SOLUTION:
	1. Check for proper blower operation. If a blower motor fault has occurred fault code “61” should also be present. Check the wiring to the motor then the motor.
	2. Check filters and ductwork. Determine static pressure and confirm it is not above published values found in the Checking and Adjusting Airflow section.
	3. Replace the limit control
	4. Check wiring and connections.
	5. Confirm proper blower speed taps for high and low-fire.
	6. Insure properly sized burner orifices are installed. Check manifold pressure at high and low-fire and compare to values found in Measuring and Adjusting Manifold Gas Pressures section. Check rate and compare to nameplate input, high and low-fire. Adjust as necessary.
33	**MRLC (Manual Reset Limit Control) OPEN**
	DESCRIPTION: The MRLC is also known as the rollout limit. There are two rollout limits on (-)GEC gas units. When one or more of these limits open, they must be manually reset to the closed position. This fault can occur when burner flames are not directed down the center of the burner tube and roll out into the burner assembly. This fault indicates a serious problem that must be repaired before furnace operation can continue.
	CAUSE:
	1. Faulty limit.
	2. Loose or faulty wiring.
	3. Damaged heat exchanger
	4. Insufficient combustion air or blocked flue pipe.
	5. Overfired condition.
	6. Air leak between burner and blower compartment.
	SOLUTION:
	1. Replace limit if limit will not reset. Observe flame pattern for normal operation after limit has been replaced.
	2. Check wiring and connections. Replace and/or repair as necessary

Fault Codes with Descriptions and Solutions:

33	3. Confirm that burner flame is steady and directed down center of burner tube. If flame turbulance is evident, note if turbulance began when indoor blower motor was energized. This could be an indicaton of a damaged heat exchanger, i.e. breached primary tube.or loose swedge joint.
	4. Confirm louvered panels are unobstructed. Confirm flue pipe is unobstructed.
	5. Insure properly sized burner orifices are installed. Check manifold pressure at high and low-fire and compare to values found in Measuring and Adjusting Manifold Gas Pressures section. Check rate and compare to nameplate input, high and low-fire. Adjust as necessary.
	6. Check that all burner assembly components are properly installed. Confirm that burner flame is steady and directed down the center of tube. If turbulence is noted, check for air leaks between the burner and blower compartment.
44	**LOW FIRE NEGATIVE PRESSURE CONTROL (NPC) CLOSED (230V & 575V ONLY)**
	DESCRIPTION: The low-fire NPC should be open when the inducer is not operating. Before any heat cycle can begin, the NPC is tested to confirm the contacts are open. An ignition sequence will not occur if the low-fire NPC remains closed.
	CAUSE:
	1. NPC contacts are welded shut/faulty switch.
	2. loose or faulty wiring
	SOLUTION:
	1. Replace low fire NPC.
	2. Check wiring or connections, replace or repair as necessary

N. DIAGNOSTICS

Fault Codes with Descriptions and Solutions:

46	**LOW FIRE NEGATIVE PRESSURE CONTROL (NPC) OPEN (230V & 575V ONLY)**
	DESCRIPTION: Core command will energize the inducer for 30 seconds (pre-purge) in an attempt to close the low fire NPC. The Core Command will make four attempts to close the low-fire NPC before declaring a fault and entering a one hour lockout.
	CAUSE:
	1. Faulty inducer.
	2. Faulty Core Command
	3. Loose or faulty wiring.
	4. Disconnected, blocked, split or cut pressure switch hose.
	5. Severe wind gusts (sporadic)
	6. Faulty low fire pressure switch
	SOLUTION:
	1. Repair or replace inducer. Check inducer pressure to confirm negative pressure is adequate to close pressure switch.
	2. Replace Core Command after confirming that NPC contacts are closed while inducer is running.
46	3. Check NPC wiring and connections to Core Command.
	4. Confirm pressure switch hose is attached to pressure port on IDM and port on pressure switch. Confirm there is no split or cut in hose.
	5. Consider using the flue "snorkel" accessory.
	6. Replace pressure switch.
55	HIGH-FIRE NEGATIVE PRESSURE CONTROL (NPC) CLOSED
	DESCRIPTION: The high-fire NPC should be open when the inducer is not operating. Before any heat cycle can begin, the NPC is tested to confirm the contacts are open. An ignition sequence will not occur if the high-fire NPC remains closed.
	CAUSE:
	1. NPC contacts are welded shut/faulty switch.
	2. Loose or faulty wiring
	SOLUTION:
	1. Replace high-fire NPC.
	2. Check wiring or connections, replace or repair as necessary

57	**High-Fire NEGATIVE PRESSURE CONTROL (NPC) OPEN (230V & 575V ONLY)**
	DESCRIPTION: Furnace will ignite and operate in low-fire mode. Fault display established when thermostat calls for high-fire mode. Inducer high speed is energized and will remain on high speed for 60 seconds in an attempt to close high fire pressure switch. If pressure switch does not close after 60 seconds the inducer will drop to low speed and furnace will continue operation at low fire until high fire pressure switch closes or thermostat demand is satisfied.
	CAUSE:
	1. Faulty inducer or tap pressure inadequate to close high-fire NPC
	2. Faulty Core Command
	3. Loose or faulty wiring.
	4. Disconnected, blocked, split or cut pressure switch hose.
	5. Severe wind gusts (sporadic)
	6. Faulty high fire pressure switch
	SOLUTION:
	1. Repair or replace inducer. Check inducer pressure to confirm negative pressure is adequate to close pressure switch.
	2. Replace Core Command after confirming that NPC contacts are closed while inducer is running.
	3. Check NPC wiring and connections to Core Command.
	4. Confirm pressure switch hose is attached to pressure port on IDM and port on pressure switch. Confirm there is no split or cut in hose.
	5. Consider using the flue hood accessory.
	6. Replace pressure switch.

N. DIAGNOSTICS

Fault Codes with Descriptions and Solutions:

61	BLOWER FAULT - MOTOR CANNOT RUN
	DESCRIPTION: This is a critical blower fault- such as an internal thermal overload that prevents the motor from running. Furnace will shut down if this fault occurs during heating operation. No other operations, including thermostat calls, will occur until this fault is cleared. this fault will occur during heating operation after the main limit control has been open for more than 150 seconds (2 min:30 sec.). If this happens, the Core Command determines that the motor is not functional and enters a hard lockout condition requiring repair of the motor and manual reset of power to the furnace.
	CAUSE:
	1. The motor has tripped on thermal overload because of a restriction or bearing failure.
	2. Wiring to the motor has become compromised.
	3. The blower wheel has become damaged or is not properly attached to the motor shaft.
	4. The motor has failed catastrophically.
	SOLUTION:
	1. Remove restriction or replace motor
	2. Inspect and replace or repair wiring and/or connections to the motor
	3. Replace blower wheel and/or attach wheel to motor shaft properly.
	4. Replace motor.

Fault Codes with Descriptions and Solutions:

460V NEGATIVE PRESSURE CONTROL FAULTS	
55 & 44	**NEGATIVE PRESSURE CONTROL (NPC) CLOSED**
	460V furnace uses a single-speed inducer and one pressure switch for low and high-fire operation. The NPC should be open when the inducer is not operating.
	DESCRIPTION: Before any heat cycle can begin, the NPC is tested to confirm the contacts are open. An ignition sequence will not occur if the NPC remains closed. Core Command will flash a “55” & “44” fault code (230V & 460V units use same Core Command, “44” is normal under this scenario).
	See **CAUSE** and **SOLUTION** for fault code “55” above.
57 & 46	**NEGATIVE PRESSURE CONTROL (NPC) OPEN**
	DESCRIPTION: The inducer will run for 20 seconds in an attempt to close the pressure switch. At that time the Core Command will flash a “57” & “46” fault code (230V & 460V units use same Core Command, “46” is normal under this scenario). Inducer will continue to run an additional 40 seconds before being de-energized. After a five minute period the Core Command will make another attempt to close the pressure switch. This cycle will repeat until the pressure switch closes or call for heat is removed.
	See **CAUSE** and **SOLUTION** for fault code “57” above.

N.2.3. Non-applicable Fault Codes

The controls used in this product are common with a few other product families. Because of this, there are several fault codes that are programmed into the controls but DO NOT APPLY to this product. If one of these fault codes appear, clear the fault and continue diagnostics. If the code persists, power down the unit and reapply power before continuing diagnostics.

These non-applicable fault codes are listed below:

Alarm Codes - NON-APPLICABLE FAULT CODES		
21	REFRIGERANT LOW PRESSURE SWITCH OPEN – CIRCUIT 2	Problem
30	REFRIGERANT HIGH PRESSURE SWITCH OPEN – CIRCUIT 2	Problem
34	Comfort Alert Code 4 for Compressor Circuit 2	Shutdown
35	Comfort Alert Code 5 for Compressor Circuit 2	Shutdown
36	Comfort Alert Code 6 for Compressor Circuit 2	Shutdown
37	Comfort Alert Code 7 for Compressor Circuit 2	Shutdown
38	Comfort Alert Code 8 for Compressor Circuit 2	Shutdown
39	Comfort Alert Code 9 for Compressor Circuit 2	Shutdown
50	FREEZE SWITCH OPEN – CIRCUIT 2	Problem

N.3. Common Mistakes

- These are a list of common mistakes made during installation.
- Drain Pan Connections, drain trap connected to the wrong outlet side, not connected at all, or insufficient trap depth.
- Connecting a W2 call only to try and get full heat all the time, Connect both W1 and W2 together if the job requirement or thermostat is setup for single stage heating.
- Connecting a Y2 call only to try and get full cooling all the time, Connect both Y1 and Y2 together if the job requirement or thermostat is setup for single stage cooling.
- Economizer connections, not installing the 3-wire jumper plug into the economizer wiring harness, if a factory option smoke detector is not used, this will cause a Smoke Detection Fault.

P. APPENDICES

Appendix A – General Product Data

GENERAL DATA - (-)GEDZR MODELS; ZR SERIES

7.5 - 12.5 TON [26.4 - 44.0 kW]

Model (-)GEDZR Series	ZR090A******A	ZR102A******A	ZR120A******A
Cooling Performance[1]			
Gross Cooling Capacity Btu [kW]	88,000 [25.78]	99,000 [29.01]	118,000 [34.57]
EER/SEER[2]	11/NA	11/NA	11/NA
Nominal CFM/AHRI Rated CFM [L/s]	3000/3175 [1416/1498]	3400/3200 [1604/1510]	4000/3480 [1888/1642]
AHRI Net Cooling Capacity Btu [kW]	85,000 [24.9]	96,000 [28.13]	114,000 [33.4]
Net Sensible Capacity Btu [kW]	62,700 [18.37]	68,300 [20.01]	80,600 [23.62]
Net Latent Capacity Btu [kW]	22,300 [6.53]	27,700 [8.12]	33,400 [9.79]
IEER[3]	12.7	12.7	12.7
Net System Power kW	7.53	8.51	9.86
Compressor No./Type No. Stages	1/Scroll 1	1/Scroll 1	1/Scroll 1
Outdoor Sound Rating (dB)[5]	88	88	88
Outdoor Coil - Fin Type	Louvered	Louvered	Louvered
Tube Type	MicroChannel	MicroChannel	MicroChannel
MicroChannel Depth in. [mm]	0.71 [18]	0.81 [20.6]	1 [25.4]
Face Area sq. ft. [sq. m]	25.4 [2.36]	25.6 [2.38]	25.6 [2.38]
Rows / FPI [FPcm]	1 / 23 [9]	1 / 23 [9]	1 / 23 [9]
Indoor Coil - Fin Type	Louvered	Louvered	Louvered
Tube Type	MicroChannel	MicroChannel	MicroChannel
MicroChannel Depth in. [mm]	1 [25.4]	1.26 [32]	1.26 [32]
Face Area sq. ft. [sq. m]	11 [1.02]	10.9 [1.01]	10.9 [1.01]
Rows / FPI [FPcm]	1 / 20 [8]	1 / 20 [8]	1 / 20 [8]
Refrigerant Control	TX Valves	TX Valves	TX Valves
Drain Connection No./Size in. [mm]	1/0.75 [19.05]	1/0.75 [19.05]	1/0.75 [19.05]
Outdoor Fan - Type	Propeller	Propeller	Propeller
No. Used/Diameter in. [mm]	2/24 [609.6]	2/24 [609.6]	2/24 [609.6]
Drive Type/No. Speeds	Direct/1	Direct/1	Direct/1
CFM [L/s]	8000 [3775]	8000 [3775]	8500 [4011]
No. Motors/HP	2 at 1/5 HP	2 at 1/5 HP	2 at 1/3 HP
Motor RPM	820	820	1075
Indoor Fan - Type	FC Centrifugal	FC Centrifugal	FC Centrifugal
No. Used/Diameter in. [mm]	1/15x15 [381x381]	1/15x15 [381x381]	1/15x15 [381x381]
Drive Type	Belt (Adjustable)	Belt (Adjustable)	Belt (Adjustable)
No. Speeds	Single	Single	Single
No. Motors	1	1	1
Motor RPM	1725	1725	1725
Motor Frame Size	56	56	56
Filter - Type	Disposable	Disposable	Disposable
Furnished	Yes	Yes	Yes
(NO.) Size Recommended in. [mm x mm x mm]	(4)2x20x20 [51x508x508]	(4)2x20x20 [51x508x508]	(4)2x20x20 [51x508x508]
Refrigerant Charge Oz. [g]	100 [2835]	117 [3317]	136 [3856]
Weights			
Net Weight lbs. [kg]	839 [381]	868 [394]	896 [406]
Ship Weight lbs. [kg]	878 [398]	907 [411]	935 [424]

Note: Please look at the rating plates pasted on the side of the unit to understand the model number of your unit.

Appendix A – General Product Data

GENERAL DATA - (-)GEDZS MODELS; ZS SERIES

7.5 - 12.5 TON [26.4 - 44.0 kW]

Model (-)GEDZS Series	ZS090A******A	ZS102A******A	ZS120A******A	ZS150A******A
Cooling Performance[1]				
Gross Cooling Capacity Btu [kW]	88,000 [25.78]	99,000 [29.01]	118,000 [34.57]	148,000 [43.36]
EER/SEER[2]	11/NA	11/NA	11/NA	10.8/NA
Nominal CFM/AHRI Rated CFM [L/s]	3000/3175 [1416/1498]	3400/3225 [1604/1522]	4000/3480 [1888/1642]	5000/3750 [2360/1770]
AHRI Net Cooling Capacity Btu [kW]	85,000 [24.9]	96,000 [28.13]	114,000 [33.4]	142,000 [41.61]
Net Sensible Capacity Btu [kW]	62,700 [18.37]	68,300 [20.01]	79,600 [23.32]	98,600 [28.89]
Net Latent Capacity Btu [kW]	22,300 [6.53]	27,700 [8.12]	34,400 [10.08]	43,400 [12.72]
IEER[3]	12.7	12.7	12.7	12.2
Net System Power kW	7.35	7.35	9.83	13.69
Compressor				
No./Type	1/Scroll	1/Scroll	1/Scroll	2/Tandem Scroll
No. Stages	2	2	2	2
Outdoor Sound Rating (dB)[5]	88	88	88	88
Outdoor Coil - Fin Type	Louvered	Louvered	Louvered	Louvered
Tube Type	MicroChannel	MicroChannel	MicroChannel	MicroChannel
MicroChannel Depth in. [mm]	0.71 [18]	0.81 [20.6]	1 [25.4]	1 [25.4]
Face Area sq. ft. [sq. m]	25.4 [2.36]	25.6 [2.38]	25.6 [2.38]	31.5 [2.93]
Rows / FPI [FPcm]	1 / 23 [9]	1 / 23 [9]	1 / 23 [9]	1 / 23 [9]
Indoor Coil - Fin Type	Louvered	Louvered	Louvered	Louvered
Tube Type	MicroChannel	MicroChannel	MicroChannel	MicroChannel
MicroChannel Depth in. [mm]	1 [25.4]	1.26 [32]	1.26 [32]	1 [25.4]
Face Area sq. ft. [sq. m]	11 [1.02]	10.9 [1.01]	10.9 [1.01]	13.8 [1.28]
Rows / FPI [FPcm]	1 / 20 [8]	1 / 20 [8]	1 / 20 [8]	2 / 18 [7]
Refrigerant Control	TX Valves	TX Valves	TX Valves	TX Valves
Drain Connection No./Size in. [mm]	1/0.75 [19.05]	1/0.75 [19.05]	1/0.75 [19.05]	1/0.75 [19.05]
Outdoor Fan - Type	Propeller	Propeller	Propeller	Propeller
No. Used/Diameter in. [mm]	2/24 [609.6]	2/24 [609.6]	2/24 [609.6]	2/24 [609.6]
Drive Type/No. Speeds	Direct/1	Direct/1	Direct/1	Direct/1
CFM [L/s]	8000 [3775]	8000 [3775]	8500 [4011]	9000 [4247]
No. Motors/HP	2 at 1/5 HP	2 at 1/5 HP	2 at 1/3 HP	2 at 3/4 HP
Motor RPM	820	820	1075	1100
Indoor Fan - Type	FC Centrifugal	FC Centrifugal	FC Centrifugal	FC Centrifugal
No. Used/Diameter in. [mm]	1/15x15 [381x381]	1/15x15 [381x381]	1/15x15 [381x381]	1/15x15 [381x381]
Drive Type	Belt (Adjustable)	Belt (Adjustable)	Belt (Adjustable)	Belt (Adjustable)
No. Speeds	Single	Single	Single	Single
No. Motors	1	1	1	1
Motor RPM	1725	1725	1725	1725
Motor Frame Size	56	56	56	56
Filter - Type	Disposable	Disposable	Disposable	Disposable
Furnished	Yes	Yes	Yes	Yes
(NO.) Size Recommended in. [mm x mm x mm]	(4)2x20x20 [51x508x508]	(4)2x20x20 [51x508x508]	(4)2x20x20 [51x508x508]	(4)2x20x25 [51x508x635]
Refrigerant Charge Oz. [g]	100 [2835]	122 [3458]	136 [3856]	186 [5273]
Weights				
Net Weight lbs. [kg]	839 [381]	868 [394]	896 [406]	1094 [496]
Ship Weight lbs. [kg]	878 [398]	907 [411]	935 [424]	1133 [514]

Note: Please look at the rating plates pasted on the side of the unit to understand the model number of your unit.

P. APPENDICES

Appendix A – General Product Data (Cont.)

GENERAL DATA - (-)GEDZT MODELS; ZT SERIES
7.5 - 12.5 TON [26.4 - 44.0 kW]

Model (-)GEDZT Series	ZT090A******A	ZT102A******A	ZT120A******A	ZT150A******A
Cooling Performance[1]				
Gross Cooling Capacity Btu [kW]	88,000 [25.78]	99,000 [29.01]	118,000 [34.57]	148,000 [43.36]
EER/SEER[2]	11/NA	11/NA	11/NA	10.8/NA
Nominal CFM/AHRI Rated CFM [L/s]	3000/3175 [1416/1498]	3400/3225 [1604/1522]	4000/3480 [1888/1642]	5000/3750 [2360/1770]
AHRI Net Cooling Capacity Btu [kW]	85,000 [24.9]	96,000 [28.13]	114,000 [33.4]	142,000 [41.61]
Net Sensible Capacity Btu [kW]	62,700 [18.37]	68,300 [20.01]	79,600 [23.32]	98,600 [28.89]
Net Latent Capacity Btu [kW]	22,300 [6.53]	27,700 [8.12]	34,400 [10.08]	43,400 [12.72]
IEER[3]	14.6	14.6	14.6	14
Net System Power kW	7.35	7.35	9.83	13.69
Compressor				
No./Type	1/Scroll	1/Scroll	1/Scroll	2/Tandem Scroll
No. Stages	2	2	2	2
Outdoor Sound Rating (dB)[5]	88	88	88	88
Outdoor Coil - Fin Type	Louvered	Louvered	Louvered	Louvered
Tube Type	MicroChannel	MicroChannel	MicroChannel	MicroChannel
MicroChannel Depth in. [mm]	0.71 [18]	0.81 [20.6]	1 [25.4]	1 [25.4]
Face Area sq. ft. [sq. m]	25.4 [2.36]	25.6 [2.38]	25.6 [2.38]	31.5 [2.93]
Rows / FPI [FPcm]	1 / 23 [9]	1 / 23 [9]	1 / 23 [9]	1 / 23 [9]
Indoor Coil - Fin Type	Louvered	Louvered	Louvered	Louvered
Tube Type	MicroChannel	MicroChannel	MicroChannel	MicroChannel
MicroChannel Depth in. [mm]	1 [25.4]	1.26 [32]	1.26 [32]	1 [25.4]
Face Area sq. ft. [sq. m]	11 [1.02]	10.9 [1.01]	10.9 [1.01]	13.8 [1.28]
Rows / FPI [FPcm]	1 / 20 [8]	1 / 20 [8]	1 / 20 [8]	2 / 18 [7]
Refrigerant Control	TX Valves	TX Valves	TX Valves	TX Valves
Drain Connection No./Size in. [mm]	1/0.75 [19.05]	1/0.75 [19.05]	1/0.75 [19.05]	1/0.75 [19.05]
Outdoor Fan - Type	Propeller	Propeller	Propeller	Propeller
No. Used/Diameter in. [mm]	2/24 [609.6]	2/24 [609.6]	2/24 [609.6]	2/24 [609.6]
Drive Type/No. Speeds	Direct/1	Direct/1	Direct/1	Direct/1
CFM [L/s]	8000 [3775]	8000 [3775]	8500 [4011]	9000 [4247]
No. Motors/HP	2 at 1/5 HP	2 at 1/5 HP	2 at 1/3 HP	2 at 3/4 HP
Motor RPM	820	820	1075	1100
Indoor Fan - Type	FC Centrifugal	FC Centrifugal	FC Centrifugal	FC Centrifugal
No. Used/Diameter in. [mm]	1/15x15 [381x381]	1/15x15 [381x381]	1/15x15 [381x381]	1/15x15 [381x381]
Drive Type	Belt (Adjustable)	Belt (Adjustable)	Belt (Adjustable)	Belt (Adjustable)
No. Speeds	Single	Single	Single	Single
No. Motors	1	1	1	1
Motor RPM	1725	1725	1725	1725
Motor Frame Size	56	56	56	184
Filter - Type	Disposable	Disposable	Disposable	Disposable
Furnished	Yes	Yes	Yes	Yes
(NO.) Size Recommended in. [mm x mm x mm]	(4)2x20x20 [51x508x508]	(4)2x20x20 [51x508x508]	(4)2x20x20 [51x508x508]	(4)2x20x25 [51x508x635]
Refrigerant Charge Oz. [g]	100 [2835]	122 [3458]	136 [3856]	
Weights				
Net Weight lbs. [kg]	839 [381]	868 [394]	896 [406]	1094 [496]
Ship Weight lbs. [kg]	878 [398]	907 [411]	935 [424]	1133 [514]

Note: Please look at the rating plates pasted on the side of the unit to understand the model number of your unit.

Appendix B – Electrical Data

ELECTRICAL DATA - (-)GEDZR SERIES											
		090ACA15 090ACA20	**090ACB15 090ACC15 090ACC20 090ACB20**	**090ADA15 090ADA20**	**090ADB15 090ADB20 090ADC15 090ADC20**	**090AYA15**	**090AYA20**	**090AYB15**	**090AYB20**	**090AYC15**	**090AYC20**
Unit Information	Unit Operating Voltage Range	187-253	187-253	414-506	414-506	517-633	517-633	517-633	517-633	517-633	517-633
	Volts	208/230	208/230	460	460	575	575	575	575	575	575
	Phase	3	3	3	3	3	3	3	3	3	3
	Hz	60	60	60	60	60	60	60	60	60	60
	Minimum Circuit Ampacity	41	43	21	23	16	16	17	17	17	17
	Minimum Overcurrent Protection Device Size	50	50	25	30	20	20	20	20	20	20
	Maximum Overcurrent Protection Device Size	60	60	30	35	25	25	25	25	25	25
Compressor Motor	No.	1	1	1	1	1	1	1	1	1	1
	Volts	208/230	208/230	460	460	575	575	575	575	575	575
	Phase	3	3	3	3	3	3	3	3	3	3
	RPM	3450	3450	3450	3450	3450	3450	3450	3450	3450	3450
	HP, Compressor 1	7	7	7	7	7	7	7	7	7	7
	Amps (RLA), Comp. 1	25	25	12.8	12.8	9.6	9.6	9.6	9.6	9.6	9.6
	Amps (LRA), Comp. 1	164	164	100	100	78	78	78	78	78	78
Condenser Motor	No.	2	2	2	2	2	2	2	2	2	2
	Volts	208/230	208/230	460	460	575	575	575	575	575	575
	Phase	1	1	1	1	1	1	1	1	1	1
	HP	1/5	1/5	1/5	1/5	1/5	1/5	1/5	1/5	1/5	1/5
	Amps (FLA, each)	1.2	1.2	0.8	0.8	0.6	0.6	0.6	0.6	0.6	0.6
	Amps (LRA, each)	2.3	2.3	1.4	1.4	1.1	1.1	1.1	1.1	1.1	1.1
Evaporator Fan	No.	1	1	1	1	1	1	1	1	1	1
	Volts	208/230	208/230	460	460	575	575	575	575	575	575
	Phase	3	3	3	3	3	3	3	3	3	3
	HP	2	3	2	3	2	2	3	3	3	3
	Amps (FLA, each)	6.6	9.1	3.3	4.6	2.5	2.5	3.5	3.5	3.5	3.5
	Amps (LRA, each)	47	74.5	22.5	38.1	19	19	20	20	20	20

P. APPENDICES

Appendix B – Electrical Data (Cont.)

ELECTRICAL DATA - (-)GEDZR SERIES													
		102ACA15 102ACA22	**102ACB15 102ACB22**	**102ACC15 102ACC22**	**102ADA15 102ADA22**	**102ADB15 102ADB22**	**102ADC15 102ADC22**	**102AYA15**	**102AYA22**	**102AYB15**	**102AYB22**	**102AYC15**	**102AYC22**
Unit Information	Unit Operating Voltage Range	187-253	187-253	187-253	414-506	414-506	414-506	517-633	517-633	517-633	517-633	517-633	517-633
	Volts	208/230	208/230	208/230	460	460	460	575	575	575	575	575	575
	Phase	3	3	3	3	3	3	3	3	3	3	3	3
	Hz	60	60	60	60	60	60	60	60	60	60	60	60
	Minimum Circuit Ampacity	44	46	49	22	23	24	16	16	17	17	17	17
	Minimum Overcurrent Protection Device Size	60	60	60	25	30	30	20	20	20	20	20	20
	Maximum Overcurrent Protection Device Size	70	70	70	30	35	35	25	25	25	25	25	25
Compressor Motor	No.	1	1	1	1	1	1	1	1	1	1	1	1
	Volts	208/230	208/230	208/230	460	460	460	575	575	575	575	575	575
	Phase	3	3	3	3	3	3	3	3	3	3	3	3
	RPM	3450	3450	3450	3450	3450	3450	3450	3450	3450	3450	3450	3450
	HP, Compressor 1	7 1/2	7 1/2	7 1/2	7 1/2	7 1/2	7 1/2	7 1/2	7 1/2	7 1/2	7 1/2	7 1/2	7 1/2
	Amps (RLA), Comp. 1	27.6	27.6	27.6	12.8	12.8	12.8	9.6	9.6	9.6	9.6	9.6	9.6
	Amps (LRA), Comp. 1	191	191	191	100	100	100	78	78	78	78	78	78
Condenser Motor	No.	2	2	2	2	2	2	2	2	2	2	2	2
	Volts	208/230	208/230	208/230	460	460	460	575	575	575	575	575	575
	Phase	1	1	1	1	1	1	1	1	1	1	1	1
	HP	1/5	1/5	1/5	1/5	1/5	1/5	1/5	1/5	1/5	1/5	1/5	1/5
	Amps (FLA, each)	1.2	1.2	1.2	0.8	0.8	0.8	0.6	0.6	0.6	0.6	0.6	0.6
	Amps (LRA, each)	2.3	2.3	203	1.4	1.4	1.4	1.1	1.1	1.1	1.1	1.1	1.1
Evaporator Fan	No.	1	1	1	1	1	1	1	1	1	1	1	1
	Volts	208/230	208/230	208/230	460	460	460	575	575	575	575	575	575
	Phase	3	3	3	3	3	3	3	3	3	3	3	3
	HP	2	3	3	2	3	3	2	2	3	3	3	3
	Amps (FLA, each)	7.1	9.1	12.0	3.5	4.6	6	2.5	2.5	3.5	3.5	3.5	3.5
	Amps (LRA, each)	45	74.5	74.5	22.5	38.1	38.1	19	19	20	20	20	20

Appendix B – Electrical Data (Cont.)

ELECTRICAL DATA - (-)GEDZR SERIES													
		120ACA15 120ACA22	**120ACB15 120ACB22**	**120ACC15 120ACC22**	**120ADA15 120ADA22**	**120ADB15 120ADB22**	**120ADC15 120ADC22**	**120AYA15**	**120AYA22**	**120AYB15**	**120AYB22**	**120AYC15**	**120AYC22**
Unit Information	Unit Operating Voltage Range	187-253	187-253	187-253	414-506	414-506	414-506	517-633	517-633	517-633	517-633	517-633	517-633
	Volts	208/230	208/230	208/230	460	460	460	575	575	575	575	575	575
	Phase	3	3	3	3	3	3	3	3	3	3	3	3
	Hz	60	60	60	60	60	60	60	60	60	60	60	60
	Minimum Circuit Ampacity	48	51	53	26	27	28	19	19	20	20	20	20
	Minimum Overcurrent Protection Device Size	60	60	60	30	30	35	25	25	25	25	25	25
	Maximum Overcurrent Protection Device Size	70	70	80	35	40	40	25	25	30	30	30	30
Compressor Motor	No.	1	1	1	1	1	1	1	1	1	1	1	1
	Volts	208/230	208/230	208/230	460	460	460	575	575	575	575	575	575
	Phase	3	3	3	3	3	3	3	3	3	3	3	3
	RPM	3450	3450	3450	3450	3450	3450	3450	3450	3450	3450	3450	3450
	HP, Compressor 1	10	10	10	10	10	10	10	10	10	10	10	10
	Amps (RLA), Comp. 1	28.2	28.2	28.2	14.7	14.7	14.7	11.3	11.3	11.3	11.3	11.3	11.3
	Amps (LRA), Comp. 1	239	239	239	130	130	130	93.7	93.7	93.7	93.7	93.7	93.7
Condenser Motor	No.	2	2	2	2	2	2	2	2	2	2	2	2
	Volts	208/230	208/230	208/230	460	460	460	575	575	575	575	575	575
	Phase	1	1	1	1	1	1	1	1	1	1	1	1
	HP	1/3	1/3	1/3	1/3	1/3	1/3	1/3	1/3	1/3	1/3	1/3	1/3
	Amps (FLA, each)	2.4	2.4	2.4	1.4	1.4	1.4	1	1	1	1	1	1
	Amps (LRA, each)	4.7	4.7	4.7	2.4	2.4	2.4	1.6	1.6	1.6	1.6	1.6	1.6
Evaporator Fan	No.	1	1	1	1	1	1	1	1	1	1	1	1
	Volts	208/230	208/230	208/230	460	460	460	575	575	575	575	575	575
	Phase	3	3	3	3	3	3	3	3	3	3	3	3
	HP	2	2	2	2	3	3	2	2	3	3	3	3
	Amps (FLA, each)	7.9	10.1	12	3.9	5	6	2.5	2.5	3.5	3.5	3.5	3.5
	Amps (LRA, each)	45	74.5	74.5	22.5	38.1	38.1	19	19	20	20	20	20

P. APPENDICES

Appendix B – Electrical Data (Cont.)

ELECTRICAL DATA - (-)GEDZS SERIES													
		090ACA15 090ACA20	**090ACB15 090ACB20 090ACC15 090ACC20**	**090ACF15 090ACF20**	**090ACG15 090ACG20 090ACH15 090ACH20**	**090ADA15 090ADF15 090ADF20 090ADA20**	**090ADB15 090ADB20 090ADC15 090ADC20 090ADG15 090ADG20 090ADH15 090ADH20**	**090AYA15**	**090AYA20**	**090AYB15**	**090AYB20**	**090AYC15**	**090AYC20**
Unit Information	Unit Operating Voltage Range	187-253	187-253	187-253	187-253	414-506	414-506	517-633	517-633	517-633	517-633	517-633	517-633
	Volts	208/230	208/230	208/230	208/230	460	460	575	575	575	575	575	575
	Phase	3	3	3	3	3	3	3	3	3	3	3	3
	Hz	60	60	60	60	60	60	60	60	60	60	60	60
	Minimum Circuit Ampacity	41	44	41	44	17	19	13	13	14	14	14	14
	Minimum Overcurrent Protection Device Size	50	50	50	50	20	25	15	15	20	20	20	20
	Maximum Overcurrent Protection Device Size	60	60	60	60	25	25	15	15	20	20	20	20
Compressor Motor	No.	1	1	1	1	1	1	1	1	1	1	1	1
	Volts	208/230	208/230	208/230	208/230	460	460	575	575	575	575	575	575
	Phase	3	3	3	3	3	3	3	3	3	3	3	3
	RPM	3450	3450	3450	3450	3450	3450	3450	3450	3450	3450	3450	3450
	HP, Compressor 1	7	7	7	7	7	7	7	7	7	7	7	7
	Amps (RLA), Comp. 1	25.3	25.3	25.3	25.3	9.6	9.6	7.1	7.1	7.1	7.1	7.1	7.1
	Amps (LRA), Comp. 1	184	184	184	184	84	84	60	60	60	60	60	60
Condenser Motor	No.	2	2	2	2	2	2	2	2	2	2	2	2
	Volts	208/230	208/230	208/230	208/230	460	460	575	575	575	575	575	575
	Phase	1	1	1	1	1	1	1	1	1	1	1	1
	HP	1/5	1/5	1/5	1/5	1/5	1/5	1/5	1/5	1/5	1/5	1/5	1/5
	Amps (FLA, each)	1.2	1.2	1.2	1.2	0.8	0.8	0.6	0.6	0.6	0.6	0.6	0.6
	Amps (LRA, each)	2.3	2.3	2.3	2.3	1.4	1.4	1.1	1.1	1.1	1.1	1.1	1.1
Evaporator Fan	No.	1	1	1	1	1	1	1	1	1	1	1	1
	Volts	208/230	208/230	208/230	208/230	460	460	575	575	575	575	575	575
	Phase	3	3	3	3	3	3	3	3	3	3	3	3
	HP	2	3	2	3	2	3	2	2	3	3	3	3
	Amps (FLA, each)	6.6	9.1	6.6	9.1	3.2	4.6	2.5	2.5	3.5	3.5	3.5	3.5
	Amps (LRA, each)	47	74.5	22.5	74.5	22.5	38.1	19	19	20	20	20	20

Appendix B – Electrical Data (Cont.)

ELECTRICAL DATA - (-)GEDZS SERIES													
		102ACA15 102ACF15 102ACF22 102ACA22	**102ACB15 102ACB22 102ACG15 102ACG22**	**102ACC15 102ACC22 102ACH15 102ACH22**	**102ADA15 102ADA22 102ADF15 102ADF22**	**102ADB15 102ADB22 102ADG15 102ADG22**	**102ADC15 102ADC22 102ADH15 102ADH22**	**102AYA15**	**102AYA22**	**102AYB15**	**102AYB22**	**102AYC15**	**102AYC22**
Unit Information	Unit Operating Voltage Range	187-253	187-253	187-253	414-506	414-506	414-506	517-633	517-633	517-633	517-633	517-633	517-633
	Volts	208/230	208/230	208/230	460	460	460	575	575	575	575	575	575
	Phase	3	3	3	3	3	3	3	3	3	3	3	3
	Hz	60	60	60	60	60	60	60	60	60	60	60	60
	Minimum Circuit Ampacity	46	48	51	21	22	24	16	16	17	17	17	17
	Minimum Overcurrent Protection Device Size	60	60	60	25	25	30	20	20	20	20	20	20
	Maximum Overcurrent Protection Device Size	70	70	70	30	30	35	25	25	25	25	25	25
Compressor Motor	No.	1	1	1	1	1	1	1	1	1	1	1	1
	Volts	208/230	208/230	208/230	460	460	460	575	575	575	575	575	575
	Phase	3	3	3	3	3	3	3	3	3	3	3	3
	RPM	3450	3450	3450	3450	3450	3450	3450	3450	3450	3450	3450	3450
	HP, Compressor 1	7 1/2	7 1/2	7 1/2	7 1/2	7 1/2	7 1/2	7 1/2	7 1/2	7 1/2	7 1/2	7 1/2	7 1/2
	Amps (RLA), Comp. 1	28.8	28.8	28.8	12.5	12.5	12.5	9.7	9.7	9.7	9.7	9.7	9.7
	Amps (LRA), Comp. 1	191	191	191	100	100	100	70	70	70	70	70	70
Condenser Motor	No.	2	2	2	2	2	2	2	2	2	2	2	2
	Volts	208/230	208/230	208/230	460	460	460	575	575	575	575	575	575
	Phase	1	1	1	1	1	1	1	1	1	1	1	1
	HP	1/5	1/5	1/5	1/5	1/5	1/5	1/5	1/5	1/5	1/5	1/5	1/5
	Amps (FLA, each)	1.2	1.2	1.2	0.8	0.8	0.8	0.6	0.6	0.6	0.6	0.6	0.6
	Amps (LRA, each)	2.3	2.3	2.3	1.4	1.4	1.4	1.1	1.1	1.1	1.1	1.1	1.1
Evaporator Fan	No.	1	1	1	1	1	1	1	1	1	1	1	1
	Volts	208/230	208/230	208/230	460	460	460	575	575	575	575	575	575
	Phase	3	3	3	3	3	3	3	3	3	3	3	3
	HP	2	3	3	2	3	3	2	2	3	3	3	3
	Amps (FLA, each)	7	9.1	12	3.5	4.6	6	2.5	2.5	3.5	3.5	3.5	3.5
	Amps (LRA, each)	45	74.5	74.5	22.5	38.1	38.1	19	19	20	20	20	20

P. APPENDICES

Appendix B – Electrical Data (Cont.)

ELECTRICAL DATA - (-)GEDZS SERIES													
		120ACA15 120ACA22 120ACF15 120ACF22	**120ACB15 120ACB22 120ACG15 120ACG22**	**120ACC15 120ACC22 120ACH15 120ACH22**	**120ADA15 120ADA22 120ADF15 120ADF22**	**120ADB15 120ADB22 120ADG15 120ADG22**	**120ADC15 120ADC22 120ADH15 120ADH22**	**120AYA15**	**120AYA22**	**120AYB15**	**120AYB22**	**120AYC15**	**120AYC22**
Unit Information	Unit Operating Voltage Range	187-253	187-253	187-253	414-506	414-506	414-506	517-633	517-633	517-633	517-633	517-633	517-633
	Volts	208/230	208/230	208/230	460	460	460	575	575	575	575	575	575
	Phase	3	3	3	3	3	3	3	3	3	3	3	3
	Hz	60	60	60	60	60	60	60	60	60	60	60	60
	Minimum Circuit Ampacity	54	56	58	26	27	28	19	19	20	20	20	20
	Minimum Overcurrent Protection Device Size	70	70	70	30	30	35	25	25	25	25	25	25
	Maximum Overcurrent Protection Device Size	80	80	90	40	40	40	25	25	30	30	30	30
Compressor Motor	No.	1	1	1	1	1	1	1	1	1	1	1	1
	Volts	208/230	208/230	208/230	460	460	460	575	575	575	575	575	575
	Phase	3	3	3	3	3	3	3	3	3	3	3	3
	RPM	3450	3450	3450	3450	3450	3450	3450	3450	3450	3450	3450	3450
	HP, Compressor 1	10	10	10	10	10	10	10	10	10	10	10	10
	Amps (RLA), Comp. 1	32.6	32.6	32.6	14.8	14.8	14.8	11.1	11.1	11.1	11.1	11.1	11.1
	Amps (LRA), Comp. 1	240	240	240	130	130	130	93.7	93.7	93.7	93.7	93.7	93.7
Condenser Motor	No.	2	2	2	2	2	2	2	2	2	2	2	2
	Volts	208/230	208/230	208/230	460	460	460	575	575	575	575	575	575
	Phase	1	1	1	1	1	1	1	1	1	1	1	1
	HP	1/3	1/3	1/3	1/3	1/3	1/3	1/3	1/3	1/3	1/3	1/3	1/3
	Amps (FLA, each)	2.4	2.4	2.4	1.4	1.4	1.4	1	1	1	1	1	1
	Amps (LRA, each)	4.7	4.7	4.7	2.4	2.4	2.4	2.2	2.2	2.2	2.2	2.2	2.2
Evaporator Fan	No.	1	1	1	1	1	1	1	1	1	1	1	1
	Volts	208/230	208/230	208/230	460	460	460	575	575	575	575	575	575
	Phase	3	3	3	3	3	3	3	3	3	3	3	3
	HP	2	2	2	2	3	3	2	2	3	3	3	3
	Amps (FLA, each)	7.9	10.1	12	3.9	5.1	6	2.5	2.5	3.5	3.5	3.5	3.5
	Amps (LRA, each)	45	74.5	74.5	22.5	38.1	38.1	19	19	20	20	20	20

Appendix B – Electrical Data (Cont.)

ELECTRICAL DATA - (-)GEDZS SERIES							
		150ACA15 150ACA22 150ACF15 150ACF22	**150ACB15 150ACB22 150ACG15 150ACG22**	**150ADA15 150ADA22 150ADF15 150ADF22**	**150ADB15 150ADB22 150ADG15 150ADG22**	**150AYA15 150AYA22**	**150AYB15 150AYB22**
Unit Information	Unit Operating Voltage Range	187-253	187-253	414-506	414-506	517-633	517-633
	Volts	208/230	208/230	460	460	575	575
	Phase	3	3	3	3	3	3
	Hz	60	60	60	60	60	60
	Minimum Circuit Ampacity	70	75	34	37	25	27
	Minimum Overcurrent Protection Device Size	80	90	40	40	30	30
	Maximum Overcurrent Protection Device Size	90	90	40	45	30	30
Compressor Motor	No.	2	2	2	2	2	2
	Volts	208/230	208/230	460	460	575	575
	Phase	3	3	3	3	3	3
	RPM	3450	3450	3450	3450	3450	3450
	HP, Compressor 1	6	6	6	6	6	6
	Amps (RLA), Comp. 1	22.4	22.4	10.6	10.6	7.7	7.7
	Amps (LRA), Comp. 1	164	164	100	100	78	78
	HP, Compressor 2	6	6	6	6	6	6
	Amps (RLA), Comp. 2	22.4	22.4	10.6	10.6	7.7	7.7
	Amps (LRA), Comp. 2	164	164	100	100	78	78
Condenser Motor	No.	2	2	2	2	2	2
	Volts	208/230	208/230	460	460	575	575
	Phase	1	1	1	1	1	1
	HP	3/4	3/4	3/4	3/4	3/4	3/4
	Amps (FLA, each)	4.2	4.2	2.3	2.3	1.6	1.6
	Amps (LRA, each)	10.1	10.1	4.9	4.9	3.4	3.4
Evaporator Fan	No.	1	1	1	1	1	1
	Volts	208/230	208/230	460	460	575	575
	Phase	3	3	3	3	3	3
	HP	3	5	3	5	3	5
	Amps (FLA, each)	10.4	16	5.2	8	4.4	5.9
	Amps (LRA, each)	74.5	82	38.1	41	20	38

P. APPENDICES

Appendix B – Electrical Data (Cont.)

ELECTRICAL DATA - (-)GEDZT SERIES					
		090ACF15 090ACF20	**090ACG15 090ACG20 090ACH15 090ACH20**	**090ADF15 090ADF20**	**090ADG15 090ADG20 090ADH15 090ADH20**
Unit Information	Unit Operating Voltage Range	187-253	187-253	414-506	414-506
	Volts	208/230	208/230	460	460
	Phase	3	3	3	3
	Hz	60	60	60	60
	Minimum Circuit Ampacity	41	44	17	19
	Minimum Overcurrent Protection Device Size	50	50	20	25
	Maximum Overcurrent Protection Device Size	60	60	25	25
Compressor Motor	No.	1	1	1	1
	Volts	208/230	208/230	460	460
	Phase	3	3	3	3
	RPM	3450	3450	3450	3450
	HP, Compressor 1	7	7	7	7
	Amps (RLA), Comp. 1	25.3	25.3	9.6	9.6
	Amps (LRA), Comp. 1	184	184	84	84
Condenser Motor	No.	2	2	2	2
	Volts	208/230	208/230	460	460
	Phase	1	1	1	1
	HP	1/5	1/5	1/5	1/5
	Amps (FLA, each)	1.2	1.2	0.8	0.8
	Amps (LRA, each)	2.3	2.3	1.4	1.4
Evaporator Fan	No.	1	1	1	1
	Volts	208/230	208/230	460	460
	Phase	3	3	3	3
	HP	2	3	2	3
	Amps (FLA, each)	6.6	9.1	3.2	4.6
	Amps (LRA, each)	22.5	74.5	22.5	38.1
		3	5	3	5
		10.4	16	5.2	8
		74.5	82	38.1	41

Appendix B – Electrical Data (Cont.)

ELECTRICAL DATA - (-)GEDZT SERIES							
		102ACF15 102ACF22	**102ACG15 102ACG22**	**102ACH15 102ACH22**	**102ADF15 102ADF22**	**102ADG15 102ADG22**	**102ADH15 102ADH22**
Unit Information	Unit Operating Voltage Range	187-253	187-253	187-253	414-506	414-506	414-506
	Volts	208/230	208/230	208/230	460	460	460
	Phase	3	3	3	3	3	3
	Hz	60	60	60	60	60	60
	Minimum Circuit Ampacity	46	48	51	21	22	24
	Minimum Overcurrent Protection Device Size	60	60	60	25	25	30
	Maximum Overcurrent Protection Device Size	70	70	70	30	30	35
Compressor Motor	No.	1	1	1	1	1	1
	Volts	208/230	208/230	208/230	460	460	460
	Phase	3	3	3	3	3	3
	RPM	3450	3450	3450	3450	3450	3450
	HP, Compressor 1	7 1/2	7 1/2	7 1/2	7 1/2	7 1/2	7 1/2
	Amps (RLA), Comp. 1	28.8	28.8	28.8	12.5	12.5	12.5
	Amps (LRA), Comp. 1	191	191	191	100	100	100
Condenser Motor	No.	2	2	2	2	2	2
	Volts	208/230	208/230	208/230	460	460	460
	Phase	1	1	1	1	1	1
	HP	1/5	1/5	1/5	1/5	1/5	1/5
	Amps (FLA, each)	1.2	1.2	1.2	0.8	0.8	0.8
	Amps (LRA, each)	2.3	2.3	2.3	1.4	1.4	1.4
Evaporator Fan	No.	1	1	1	1	1	1
	Volts	208/230	208/230	208/230	460	460	460
	Phase	3	3	3	3	3	3
	HP	2	3	3	2	3	3
	Amps (FLA, each)	7	9.1	12	3.5	4.6	6
	Amps (LRA, each)	45	74.5	74.5	22.5	38.1	38.1
		3	5	3	5	3	5
		10.4	16	5.2	8	4.4	5.9
		74.5	82	38.1	41	20	38

P. APPENDICES

Appendix B – Electrical Data (Cont.)

ELECTRICAL DATA - (-)GEDZT SERIES							
		120ACF15 120ACF22	**120ACG15 120ACG22**	**120ACH15 120ACH22**	**120ADF15 120ADF22**	**120ADG15 120ADG22**	**120ADH15 120ADH22**
Unit Information	Unit Operating Voltage Range	187-253	187-253	187-253	414-506	414-506	414-506
	Volts	208/230	208/230	208/230	460	460	460
	Phase	3	3	3	3	3	3
	Hz	60	60	60	60	60	60
	Minimum Circuit Ampacity	54	56	58	26	27	28
	Minimum Overcurrent Protection Device Size	70	70	70	30	30	35
	Maximum Overcurrent Protection Device Size	80	80	90	40	40	30
Compressor Motor	No.	1	1	1	1	1	1
	Volts	208/230	208/230	208/230	460	460	460
	Phase	3	3	3	3	3	3
	RPM	3450	3450	3450	3450	3450	3450
	HP, Compressor 1	10	10	10	10	10	10
	Amps (RLA), Comp. 1	32.6	32.6	32.6	14.8	14.8	14.8
	Amps (LRA), Comp. 1	240	240	240	130	130	130
Condenser Motor	No.	2	2	2	2	2	2
	Volts	208/230	208/230	208/230	460	460	460
	Phase	1	1	1	1	1	1
	HP	1/3	1/3	1/3	1/3	1/3	1/3
	Amps (FLA, each)	2.4	2.4	2.4	1.4	1.4	1.4
	Amps (LRA, each)	4.7	4.7	4.7	2.4	2.4	2.4
Evaporator Fan	No.	1	1	1	1	1	1
	Volts	208/230	208/230	208/230	460	460	460
	Phase	3	3	3	3	3	3
	HP	2	2	2	2	3	3
	Amps (FLA, each)	7.9	10.1	12	3.9	5.1	6
	Amps (LRA, each)	45	74.5	74.5	22.5	38.1	38.1
		3	5	3	5	3	5
		10.4	16	5.2	8	4.4	5.9
		74.5	82	38.1	41	20	38

Appendix B – Electrical Data (Cont.)

ELECTRICAL DATA - (-)GEDZT SERIES					
		150ACF15 150ACF22	**150ACG15 150ACG22**	**150ADF15 150ADF22**	**150ADG15 150ADG22**
Unit Information	Unit Operating Voltage Range	187-253	187-253	414-506	414-506
	Volts	208/230	208/230	460	460
	Phase	3	3	3	3
	Hz	60	60	60	60
	Minimum Circuit Ampacity	70	75	34	37
	Minimum Overcurrent Protection Device Size	80	90	40	40
	Maximum Overcurrent Protection Device Size	90	90	40	45
Compressor Motor	No.	2	2	2	2
	Volts	208/230	208/230	460	460
	Phase	3	3	3	3
	RPM	3450	3450	3450	3450
	HP, Compressor 1	6	6	6	6
	Amps (RLA), Comp. 1	22.4	22.4	10.6	10.6
	Amps (LRA), Comp. 1	164	164	100	100
Condenser Motor	No.	6	6	6	6
	Volts	22.4	22.4	10.6	10.6
	Phase	164	164	100	100
	HP	2	2	2	2
	Amps (FLA, each)	208/230	208/230	460	460
	Amps (LRA, each)	1	1	1	1
Evaporator Fan	No.	3/4	3/4	3/4	3/4
	Volts	4.2	4.2	2.3	2.3
	Phase	10.1	10.1	4.9	4.9
	HP	1	1	1	1
	Amps (FLA, each)	208/230	208/230	460	460
	Amps (LRA, each)	3	3	3	3
		3	5	3	5
		10.4	16	5.2	8
		74.5	82	38.1	41

AIRFLOW PERFORMANCE — 7.5 TON [26.4kW] — 60 Hz — DOWNFLOW

Air Flow CFM [L/s]	Model (-)GEDZ*090* Voltage 208/230, 460, 575 — 3 phase 60 Hz External Static Pressure — Inches of Water [kPa]																																			
	0.1 [.02]		0.2 [.05]		0.3 [.07]		0.4 [.10]		0.5 [.12]		0.6 [.15]		0.7 [.17]		0.8 [.20]		0.9 [.22]		1.0 [.25]		1.1 [.27]		1.2 [.30]		1.3 [.32]		1.4 [.35]		1.5 [.37]		1.6 [.40]		1.7 [.42]		1.8 [.45]		1.9 [.47]		2.0 [.50]	
	RPM	W	RPM	W	RPM	W	RPM	W	RPM	W	RPM	W	RPM	W	RPM	W	RPM	W	RPM	W	RPM	W	RPM	W	RPM	W	RPM	W	RPM	W	RPM	W	RPM	W	RPM	W	RPM	W
2400 [1133]	–	–	551	782	585	814	619	848	652	885	684	926	717	969	748	1016	780	1065	810	1118	841	1174	870	1233	900	1294	929	1359	957	1427	985	1498	1012	1572	1039	1649	1065	1729	1091	1813
2500 [1180]	–	–	562	816	596	848	629	884	661	923	693	964	725	1009	756	1057	787	1108	817	1162	846	1219	876	1279	904	1343	933	1409	960	1478	987	1550	1014	1626	1040	1704	1066	1786	1092	1870
2600 [1227]	–	–	574	851	607	885	639	922	671	962	702	1006	733	1052	764	1101	794	1153	823	1209	852	1267	881	1329	909	1393	937	1461	964	1531	990	1605	1016	1682	1042	1762	1067	1844	1092	1930
2700 [1274]	553	857	585	889	618	925	650	963	681	1004	712	1049	742	1096	772	1147	801	1201	830	1258	858	1317	886	1380	914	1446	941	1515	967	1587	993	1662	1019	1740	1044	1821	1068	1905	1092	1993
2800 [1321]	565	896	597	930	629	966	660	1006	691	1049	721	1095	751	1144	780	1196	808	1251	837	1309	864	1370	892	1434	919	1501	945	1572	971	1645	996	1721	1021	1801	1045	1883	1069	1969	1093	2057
2900 [1368]	577	937	609	972	640	1010	670	1051	701	1096	730	1143	759	1193	788	1246	816	1303	843	1362	871	1425	897	1490	923	1559	949	1630	974	1705	999	1783	1023	1864	1047	1948	1070	2035	1093	2124
3000 [1416]	590	981	621	1017	651	1057	681	1099	710	1145	739	1193	768	1245	796	1300	823	1357	850	1418	877	1482	903	1549	928	1619	953	1692	978	1768	1002	1847	1026	1929	1049	2014	1072	2103	1094	2194
3100 [1463]	602	1027	633	1065	662	1105	692	1149	720	1196	749	1246	777	1299	804	1355	831	1414	857	1476	883	1541	908	1610	933	1681	958	1755	982	1833	1005	1913	1028	1997	1051	2083	1073	2173	1094	2266
3200 [1510]	615	1075	645	1114	674	1157	702	1202	731	1250	758	1301	785	1356	812	1413	838	1473	864	1537	889	1603	914	1673	938	1746	962	1821	986	1900	1008	1982	1031	2067	1053	2155	1074	2246	1095	2340
3300 [1557]	628	1126	657	1166	685	1210	713	1256	741	1306	768	1359	794	1414	820	1473	846	1535	871	1600	896	1668	920	1739	944	1813	967	1890	989	1970	1012	2053	1033	2139	1055	2229	1075	2321	1096	2416
3400 [1604]	640	1179	669	1221	697	1266	724	1314	751	1365	777	1419	803	1476	829	1536	854	1599	878	1665	902	1734	926	1807	949	1882	971	1960	993	2042	1015	2126	1036	2214	1057	2305	1077	2398	1097	2495
3500 [1652]	653	1235	681	1278	708	1324	735	1373	761	1425	787	1481	812	1539	837	1601	861	1665	885	1733	909	1803	932	1877	954	1954	976	2034	997	2116	1018	2202	1039	2291	1059	2383	1078	2478	1097	2576
3600 [1699]	666	1292	693	1337	720	1384	746	1435	771	1489	797	1545	821	1605	845	1668	869	1734	892	1803	915	1875	938	1950	959	2028	981	2109	1001	2193	1022	2280	1042	2371	1061	2464	1080	2560	1098	2660

NOTE: A/F-Drive left of bold line, B/G-Drive right of bold line, C/H-Drive right of double line.

Drive Package	A/F						B/G						C/H					
Motor H.P. [W]	2 [1491.4]						3 [2237.1]						3 [2237.1]					
Blower Sheave	AK84H						AK84H						AK84H					
Motor Sheave	1VL40*7/8						1VP50*7/8						1VP56*7/8					
Belt	A49						A50						A51					
Turns Open	0	1	**2**	3	4	5	0	1	2	3	4	**5**	0	1	2	3	4	**5**
RPM	767	721	**678**	635	590	548	992	949	908	866	823	**782**	1108	1067	1029	987	946	**905**

NOTES: 1. Factory sheave settings are shown in bold type.
2. Do not set motor sheave below minimum or maximum turns open shown.
3. Re-adjustment of sheave required to achieve rated airflow at AHRI minimum External Static Pressure
4. Drive data shown is for vertical airflow with dry coil. Add component resistance (below) to duct resistance to determine total External Static Pressure.

Airflow	AIRFLOW CORRECTION FACTORS *			COMPONENT AIRFLOW RESISTANCE			
				Wet Coil	Vertical Economizer RA Damper Open	Concentric Diffuser RXRN-AEF2000 & Concentric Adapter RXMC-DD01 (Flush)	Concentric Diffuser RXRN-AED2000 & Concentric Adapter RXMC-DD01 (Drop)
CFM [L/s]	Total MBH	Sensible MBH	Power kW	Resistance — Inches of Water [kPa]			
2400 [1133]	0.96	0.89	0.98	0.04 [.01]	0.01 [.00]	0.66 [.16]	0.53 [.13]
2500 [1180]	0.96	0.90	0.99	0.05 [.01]	0.02 [.00]	0.71 [.18]	0.57 [.14]
2600 [1227]	0.97	0.92	0.99	0.05 [.01]	0.02 [.01]	0.75 [.19]	0.60 [.15]
2700 [1274]	0.97	0.93	0.99	0.05 [.01]	0.03 [.01]	0.80 [.20]	0.65 [.16]
2800 [1321]	0.98	0.95	0.99	0.06 [.01]	0.04 [.01]	0.85 [.21]	0.69 [.17]
2900 [1368]	0.98	0.96	1.00	0.06 [.02]	0.04 [.01]	0.91 [.23]	0.74 [.18]
3000 [1416]	0.99	0.97	1.00	0.07 [.02]	0.05 [.01]	0.96 [.24]	0.79 [.20]
3100 [1463]	1.00	0.99	1.00	0.07 [.02]	0.06 [.02]	1.02 [.25]	0.86 [.21]
3200 [1510]	1.00	1.00	1.01	0.07 [.02]	0.07 [.02]	1.08 [.27]	0.92 [.23]
3300 [1557]	1.01	1.02	1.01	0.08 [.02]	0.08 [.02]	1.15 [.29]	0.99 [.25]
3400 [1604]	1.01	1.03	1.01	0.08 [.02]	0.09 [.02]	1.21 [.30]	1.05 [.26]
3500 [1652]	1.02	1.05	1.01	0.09 [.02]	0.10 [.02]	1.29 [.32]	1.09 [.27]
3600 [1699]	1.02	1.06	1.02	0.09 [.02]	0.11 [.03]	1.36 [.34]	1.13 [.28]

* Multiply correction factor times gross performance data — r sulting sensible capacity cannot exceed total capacity.

[ ] Designates Metric Conversions

AIRFLOW PERFORMANCE — 7.5 TON [26.4kW] — 60 Hz — SIDEFLOW

Air Flow CFM [L/s]	Model (-)GEDZ*090* Voltage 208/230, 460, 575 — 3 phase 60 Hz																																					
	External Static Pressure — Inches of Water [kPa]																																					
	0.1 [.02]		0.2 [.05]		0.3 [.07]		0.4 [.10]		0.5 [.12]		0.6 [.15]		0.7 [.17]		0.8 [.20]		0.9 [.22]		1.0 [.25]		1.1 [.27]		1.2 [.30]		1.3 [.32]		1.4 [.35]		1.5 [.37]		1.6 [.40]		1.7 [.42]		1.8 [.45]		1.9 [.47]		2.0 [.50]	
	RPM	W	RPM	W	RPM	W	RPM	W	RPM	W	RPM	W	RPM	W	RPM	W	RPM	W	RPM	W	RPM	W	RPM	W	RPM	W	RPM	W	RPM	W	RPM	W	RPM	W	RPM	W	RPM	W
2400 [1133]	—	—	—	—	558	822	594	853	629	887	663	925	697	965	730	1009	763	1056	794	1106	826	1159	856	1216	886	1275	915	1338	943	1404	971	1474	998	1546	1025	1622	1051	1700	1076	1782
2500 [1180]	—	—	—	—	568	848	604	881	638	917	672	956	705	998	738	1044	769	1092	801	1144	831	1199	861	1258	890	1319	919	1384	947	1452	974	1523	1001	1597	1027	1674	1052	1755	1077	1838
2600 [1227]	—	—	543	846	579	877	613	912	647	950	681	991	713	1035	745	1082	777	1132	807	1186	837	1243	867	1303	895	1366	923	1433	951	1502	978	1575	1004	1651	1029	1730	1054	1812	1078	1898
2700 [1274]	—	—	554	877	589	910	623	946	657	986	689	1029	722	1074	753	1124	784	1176	814	1231	844	1290	872	1352	901	1417	928	1485	955	1556	981	1631	1007	1708	1032	1789	1056	1873	1079	1961
2800 [1321]	—	—	566	911	600	946	634	984	666	1026	699	1070	730	1118	761	1169	792	1223	821	1280	850	1340	878	1404	906	1470	933	1540	959	1613	985	1690	1010	1769	1034	1852	1058	1938	1081	2027
2900 [1368]	543	916	577	949	611	986	644	1026	676	1069	708	1115	739	1164	770	1217	799	1273	828	1332	857	1394	885	1459	912	1528	938	1599	964	1674	989	1752	1014	1833	1037	1918	1061	2005	1083	2096
3000 [1416]	555	955	589	990	622	1029	655	1070	687	1115	718	1163	748	1214	778	1269	807	1326	836	1387	864	1451	891	1518	918	1588	944	1662	969	1738	994	1818	1017	1901	1041	1987	1063	2077	1085	2169
3100 [1463]	568	998	601	1035	634	1075	666	1118	697	1165	728	1215	758	1268	787	1324	816	1383	844	1445	871	1511	898	1580	924	1652	949	1727	974	1806	998	1887	1022	1972	1044	2060	1066	2151	1088	2245
3200 [1510]	581	1044	614	1083	646	1125	677	1170	708	1218	738	1270	768	1324	796	1382	824	1443	852	1507	879	1575	905	1646	931	1719	955	1796	980	1876	1003	1960	1026	2046	1048	2136	1070	2229	1091	2325
3300 [1557]	594	1093	626	1134	658	1178	689	1225	719	1275	749	1328	778	1384	806	1444	833	1507	860	1573	887	1642	912	1714	937	1790	962	1869	985	1951	1008	2036	1031	2124	1052	2216	1073	2310	1094	2408
3400 [1604]	607	1146	639	1189	670	1234	701	1283	730	1335	759	1390	788	1448	815	1509	843	1574	869	1642	895	1713	920	1787	944	1864	968	1945	991	2028	1014	2115	1036	2205	1057	2298	1077	2395	1097	2494
3500 [1652]	621	1203	652	1247	683	1294	713	1344	742	1398	770	1455	798	1515	825	1578	852	1644	878	1714	903	1786	928	1862	952	1941	975	2024	997	2109	1019	2198	1041	2290	1061	2385	1081	2483	1101	2584
3600 [1699]	635	1262	666	1308	696	1357	725	1409	754	1465	782	1523	809	1585	836	1650	862	1718	887	1789	912	1864	936	1941	959	2022	982	2106	1004	2194	1025	2284	1046	2378	1066	2474	1086	2574	1104	2677

NOTE: A/F-Drive left of bold line, B/G-Drive right of bold line, C/H-Drive right of double line.

Drive Package	A/F						B/G						C/H					
Motor H.P. [W]	2 [1491.4]						3 [2237.1]						3 [2237.1]					
Blower Sheave	AK84H						AK84H						AK84H					
Motor Sheave	1VL40*7/8						1VP50*7/8						1VP56*7/8					
Belt	A49						A50						A51					
Turns Open	0	1	**2**	3	4	5	0	1	2	3	4	**5**	0	1	2	3	4	**5**
RPM	765	720	**676**	633	589	544	989	949	908	865	823	**780**	1108	1067	1029	987	946	**905**

NOTES: 1. Factory sheave settings are shown in bold type.
2. Do not set motor sheave below minimum or maximum turns open shown.
3. Re-adjustment of sheave required to achieve rated airflow at AHRI minimum External Static Pressure
4. Drive data shown is for horizontal airflow with dry coil. Add component resistance (below) to duct resistance to determine total External Static Pressure.

Airflow	AIRFLOW CORRECTION FACTORS *			COMPONENT AIRFLOW RESISTANCE			
				Wet Coil	Horizontal Economizer RA Damper Open	Concentric Diffuser RXRN-AEF2000 & Concentric Adapter RXMC-DD01 (Flush)	Concentric Diffuser RXRN-AED2000 & Concentric Adapter RXMC-DD01 (Drop)
CFM [L/s]	Total MBH	Sensible MBH	Power kW	Resistance — Inches of Water [kPa]			
2400 [1133]	0.96	0.89	0.98	0.04 [.01]	0.21 [0.05]	0.66 [.16]	0.53 [.13]
2500 [1180]	0.96	0.90	0.99	0.05 [.01]	0.25 [0.06]	0.71 [.18]	0.57 [.14]
2600 [1227]	0.97	0.92	0.99	0.05 [.01]	0.28 [0.07]	0.75 [.19]	0.60 [.15]
2700 [1274]	0.97	0.93	0.99	0.05 [.01]	0.32 [0.08]	0.80 [.20]	0.65 [.16]
2800 [1321]	0.98	0.95	0.99	0.06 [.01]	0.36 [0.09]	0.85 [.21]	0.69 [.17]
2900 [1368]	0.98	0.96	1.00	0.06 [.02]	0.39 [0.10]	0.91 [.23]	0.74 [.18]
3000 [1416]	0.99	0.97	1.00	0.07 [.02]	0.43 [0.11]	0.96 [.24]	0.79 [.20]
3100 [1463]	1.00	0.99	1.00	0.07 [.02]	0.47 [0.12]	1.02 [.25]	0.86 [.21]
3200 [1510]	1.00	1.00	1.01	0.07 [.02]	0.51 [0.13]	1.08 [.27]	0.92 [.23]
3300 [1557]	1.01	1.02	1.01	0.08 [.02]	0.54 [0.14]	1.15 [.29]	0.99 [.25]
3400 [1604]	1.01	1.03	1.01	0.08 [.02]	0.58 [0.14]	1.21 [.30]	1.05 [.26]
3500 [1652]	1.02	1.05	1.01	0.09 [.02]	0.62 [0.15]	1.29 [.32]	1.09 [.27]
3600 [1699]	1.02	1.06	1.02	0.09 [.02]	0.66 [0.16]	1.36 [.34]	1.13 [.28]

* Multiply correction factor times gross performance data — r sulting sensible capacity cannot exceed total capacity. [ ] Designates Metric Conversions

AIRFLOW PERFORMANCE — 8.5 TON [29.9kW] — 60 Hz — DOWNFLOW

Air Flow CFM [L/s]	Model (-)GEDZ*102* Voltage 208/230, 460, 575 — 3 phase 60 Hz																																					
	External Static Pressure — Inches of Water [kPa]																																						
	0.1 [.02]		0.2 [.05]		0.3 [.07]		0.4 [.10]		0.5 [.12]		0.6 [.15]		0.7 [.17]		0.8 [.20]		0.9 [.22]		1.0 [.25]		1.1 [.27]		1.2 [.30]		1.3 [.32]		1.4 [.35]		1.5 [.37]		1.6 [.40]		1.7 [.42]		1.8 [.45]		1.9 [.47]		2.0 [.50]	
	RPM	W	RPM	W	RPM	W	RPM	W	RPM	W	RPM	W	RPM	W	RPM	W	RPM	W	RPM	W	RPM	W	RPM	W	RPM	W	RPM	W	RPM	W	RPM	W	RPM	W	RPM	W	RPM	W
2700 [1274]	—	—	561	894	596	934	631	975	665	1018	698	1062	730	1108	762	1155	793	1203	823	1253	853	1304	882	1357	910	1411	937	1467	964	1524	990	1583	1015	1643	1039	1704	1063	1767	1086	1832
2800 [1321]	—	—	573	927	608	969	642	1013	676	1058	708	1104	740	1152	771	1201	802	1252	832	1304	861	1358	889	1413	917	1470	943	1528	970	1587	995	1648	1020	1711	1044	1775	1067	1840	1090	1907
2900 [1368]	—	—	586	964	620	1008	654	1054	687	1101	719	1150	750	1200	781	1252	811	1305	840	1360	869	1416	897	1473	924	1532	950	1593	976	1654	1001	1718	1025	1782	1048	1848	1071	1916	1093	1985
3000 [1416]	564	959	599	1004	633	1051	666	1099	698	1149	730	1200	761	1253	791	1307	820	1362	849	1419	877	1477	904	1537	931	1598	957	1661	982	1725	1006	1791	1030	1858	1053	1926	1075	1996	1097	2067
3100 [1463]	578	1001	612	1048	645	1098	678	1148	710	1200	741	1254	771	1308	801	1365	830	1423	858	1482	886	1542	912	1605	939	1668	964	1733	989	1800	1012	1868	1036	1937	1058	2008	1080	2080	1101	2154
3200 [1510]	592	1046	625	1096	658	1148	690	1201	721	1255	752	1311	782	1368	811	1427	840	1487	867	1548	894	1611	921	1676	946	1742	971	1809	995	1878	1019	1948	1041	2020	1063	2093	1085	2168	1105	2244
3300 [1557]	605	1096	638	1148	671	1202	702	1257	733	1314	763	1372	793	1432	821	1493	849	1555	877	1619	903	1684	929	1751	954	1819	979	1889	1002	1960	1025	2033	1047	2107	1069	2182	1090	2259	1110	2337
3400 [1604]	619	1149	652	1204	684	1260	715	1317	745	1376	775	1437	804	1499	832	1562	860	1627	886	1693	912	1761	938	1830	962	1900	986	1972	1009	2046	1032	2121	1053	2197	1074	2275	1095	2354	1114	2435
3500 [1652]	634	1206	666	1263	697	1322	728	1382	758	1443	787	1506	815	1570	843	1635	870	1702	896	1771	922	1841	946	1912	970	1985	994	2060	1017	2135	1038	2213	1060	2291	1080	2371	1100	2453	1119	2536
3600 [1699]	648	1267	680	1326	711	1387	741	1449	770	1513	799	1578	827	1645	854	1713	880	1782	906	1853	931	1925	955	1999	979	2074	1002	2151	1024	2229	1045	2308	1066	2389	1086	2472	1105	2556	1124	2641
3700 [1746]	663	1332	694	1393	724	1456	754	1521	783	1587	811	1654	838	1723	865	1793	891	1865	916	1938	941	2013	965	2089	988	2167	1010	2246	1032	2326	1053	2408	1073	2491	1092	2576	1111	2662	1129	2750
3800 [1793]	678	1400	708	1464	738	1529	767	1596	795	1665	823	1734	850	1805	876	1878	902	1952	926	2028	951	2105	974	2183	996	2263	1018	2344	1039	2427	1060	2511	1080	2597	1099	2684	1117	2772	1134	2862
3900 [1840]	693	1472	723	1538	752	1606	781	1675	808	1746	836	1818	862	1892	888	1966	913	2043	937	2121	961	2200	983	2281	1005	2363	1027	2447	1048	2532	1067	2618	1087	2706	1105	2796	1123	2886	1140	2979
4000 [1888]	708	1548	737	1617	766	1687	794	1758	822	1831	848	1906	874	1981	900	2059	924	2137	948	2218	971	2299	993	2382	1015	2467	1036	2553	1056	2640	1075	2729	1094	2819	1112	2911	1129	3004	1146	3099
4100 [1935]	723	1628	752	1699	781	1771	808	1845	835	1920	861	1997	887	2075	911	2155	935	2236	959	2318	981	2402	1003	2488	1024	2574	1045	2663	1064	2752	1083	2844	1101	2936	1119	3030	1136	3126	1152	3223

NOTE: A/F-Drive left of bold line, B/G-Drive right of bold line, C/H-Drive right of double line.

Drive Package	A/F						B/G						C/H					
Motor H.P. [W]	2 [1491.4]						3 [2237.1]						3 [2237.1]					
Blower Sheave	AK79H						AK79H						AK79H					
Motor Sheave	1VL40*7/8						1VP50*7/8						1VP56*7/8					
Belt	A49						A50						A51					
Turns Open	0	1	**2**	3	4	5	0	1	2	3	4	**5**	0	1	2	3	4	**5**
RPM	804	758	**710**	661	616	559	1048	1003	959	914	872	**826**	1168	1128	1087	1044	1002	**957**

NOTES: 1. Factory sheave settings are shown in bold type.
2. Do not set motor sheave below minimum or maximum turns open shown.
3. Re-adjustment of sheave required to achieve rated airflow at AHRI minimum External Static Pressure
4. Drive data shown is for vertical airflow with dry coil. Add component resistance (below) to duct resistance to determine total External Static Pressure.

Airflow	AIRFLOW CORRECTION FACTORS *			COMPONENT AIRFLOW RESISTANCE			
				Wet Coil	Vertical Economizer RA Damper Open	Concentric Diffuser RXRN-AEF2000 & Concentric Adapter RXMC-DD01 (Flush)	Concentric Diffuser RXRN-AED2000 & Concentric Adapter RXMC-DD01 (Drop)
CFM [L/s]	Total MBH	Sensible MBH	Power kW	Resistance — Inches of Water [kPa]			
2700 [1274]	0.97	0.93	0.99	0.07 [.02]	0.03 [.01]	0.80 [.20]	0.65 [.16]
2800 [1321]	0.98	0.94	0.99	0.07 [.02]	0.03 [.01]	0.85 [.21]	0.69 [.17]
2900 [1368]	0.98	0.96	0.99	0.08 [.02]	0.04 [.01]	0.91 [.23]	0.74 [.18]
3000 [1416]	0.99	0.97	1.00	0.08 [.02]	0.05 [.01]	0.96 [.24]	0.79 [.20]
3100 [1463]	0.99	0.99	1.00	0.09 [.02]	0.06 [.01]	1.02 [.25]	0.86 [.21]
3200 [1510]	1.00	1.00	1.00	0.10 [.02]	0.07 [.02]	1.08 [.27]	0.92 [.23]
3300 [1557]	1.01	1.01	1.00	0.10 [.03]	0.08 [.02]	1.15 [.29]	0.99 [.25]
3400 [1604]	1.01	1.03	1.01	0.11 [.03]	0.09 [.02]	1.21 [.30]	1.05 [.26]
3500 [1652]	1.02	1.04	1.01	0.11 [.03]	0.10 [.02]	1.29 [.32]	1.09 [.27]
3600 [1699]	1.02	1.06	1.01	0.12 [.03]	0.11 [.03]	1.36 [.34]	1.13 [.28]
3700 [1746]	1.03	1.07	1.02	0.13 [.03]	0.12 [.03]	1.43 [.36]	1.18 [.29]
3800 [1793]	1.03	1.09	1.02	0.13 [.03]	0.13 [.03]	1.50 [.37]	1.23 [.31]
3900 [1840]	1.04	1.10	1.02	0.14 [.04]	0.15 [.04]	1.59 [.40]	1.31 [.33]
4000 [1888]	1.05	1.12	1.02	0.14 [.04]	0.16 [.04]	1.68 [.42]	1.38 [.34]
4100 [1935]	1.05	1.13	1.03	0.15 [.04]	0.17 [.04]	1.74 [.43]	1.44 [.36]

* Multiply correction factor times gross performance data — r sulting sensible capacity cannot exceed total capacity.

[ ] Designates Metric Conversions

AIRFLOW PERFORMANCE — 12.5 TON [43.9kW] — 60 Hz — SIDEFLOW

Air Flow CFM [L/s]	Model (-)GEDZ*150* Voltage 208/230, 460, 575 — 3 phase 60 Hz																																					
	External Static Pressure — Inches of Water [kPa]																																					
	0.1 [.02]		0.2 [.05]		0.3 [.07]		0.4 [.10]		0.5 [.12]		0.6 [.15]		0.7 [.17]		0.8 [.20]		0.9 [.22]		1.0 [.25]		1.1 [.27]		1.2 [.30]		1.3 [.32]		1.4 [.35]		1.5 [.37]		1.6 [.40]		1.7 [.42]		1.8 [.45]		1.9 [.47]		2.0 [.50]	
	RPM	W	RPM	W	RPM	W	RPM	W	RPM	W	RPM	W	RPM	W	RPM	W	RPM	W	RPM	W	RPM	W	RPM	W	RPM	W	RPM	W	RPM	W	RPM	W	RPM	W	RPM	W	RPM	W
4000 [1888]	—	—	791	1757	819	1824	846	1892	872	1961	897	2031	922	2101	946	2173	970	2245	993	2318	1015	2392	1036	2467	1057	2542	1077	2619	1096	2696	1115	2774	1133	2853	1150	2933	1167	3014	1183	
4100 [1935]	782	1773	809	1841	836	1911	863	1982	888	2053	913	2125	937	2198	961	2272	984	2346	1006	2422	1027	2498	1048	2576	1068	2654	1088	2733	1106	2812	1124	2893	1142	2975	1158	3057	1174	3140	1189	
4200 [1982]	801	1860	828	1932	854	2004	880	2077	905	2150	929	2225	952	2300	975	2377	997	2454	1019	2532	1040	2611	1060	2691	1079	2771	1098	2853	1116	2935	1133	3018	1150	3102	1166	3187	1181	3272	1196	
4300 [2029]	819	1954	845	2028	871	2102	896	2177	920	2254	944	2331	967	2409	989	2488	1011	2567	1032	2648	1052	2729	1071	2811	1090	2894	1108	2978	1125	3063	1142	3149	1158	3235	1174	3323	1188	3411	1202	
4400 [2076]	837	2053	863	2129	888	2207	912	2284	936	2363	959	2443	981	2523	1003	2605	1024	2687	1044	2770	1064	2854	1082	2938	1101	3024	1118	3110	1135	3197	1151	3286	1166	3375	1181	3464	1195	3555	1208	
4500 [2123]	855	2159	880	2237	905	2317	929	2397	952	2479	974	2561	996	2644	1016	2727	1037	2812	1056	2897	1075	2984	1093	3071	1111	3159	1128	3248	1144	3338	1159	3428	1174	3520	1188	3612	1201	3705	1214	
4600 [2171]	873	2270	898	2351	921	2433	944	2516	967	2600	988	2684	1009	2770	1030	2856	1049	2943	1068	3031	1086	3120	1104	3210	1121	3300	1137	3392	1152	3484	1167	3577	1181	3671	1195	3766	1207	3861	1219	
4700 [2218]	891	2387	914	2471	938	2556	960	2641	982	2727	1003	2814	1023	2902	1043	2991	1062	3080	1080	3171	1097	3262	1114	3354	1130	3447	1146	3541	1161	3636	1175	3732	1188	3828	1201	3925	1213	4023	—	
4800 [2265]	908	2511	931	2597	954	2684	975	2772	996	2860	1017	2950	1036	3040	1055	3132	1074	3224	1091	3317	1108	3410	1124	3505	1140	3601	1155	3697	1169	3794	1182	3892	1195	3991	1207	4091	1219	4191	—	
4900 [2312]	925	2640	947	2729	969	2818	990	2908	1011	3000	1031	3092	1050	3184	1068	3278	1086	3373	1102	3468	1119	3565	1134	3662	1149	3760	1163	3859	1177	3958	1190	4059	1202	4160	1213	4262	—	—	—	
5000 [2359]	942	2775	964	2866	985	2958	1005	3051	1025	3145	1044	3239	1062	3335	1080	3431	1097	3528	1113	3626	1129	3725	1144	3824	1158	3925	1172	4026	1185	4128	1197	4231	1208	4335	1219	4440	—	—	—	
5100 [2407]	958	2916	979	3010	1000	3104	1020	3200	1039	3296	1057	3393	1075	3491	1092	3589	1108	3689	1124	3789	1139	3891	1153	3993	1167	4096	1180	4200	1192	4304	1204	4410	1214	4516	—	—	—	—	—	
5200 [2454]	975	3063	995	3160	1015	3256	1034	3354	1053	3453	1070	3552	1087	3653	1104	3754	1120	3856	1135	3959	1149	4063	1162	4167	1175	4273	1188	4379	1199	4486	1210	4594	1220	4703	—	—	—	—	—	
5300 [2501]	991	3217	1010	3315	1030	3415	1048	3515	1066	3616	1083	3718	1100	3821	1115	3924	1130	4029	1145	4134	1158	4241	1171	4348	1184	4456	1195	4564	1206	4674	1216	4785	—	—	—	—	—	—	—	
5400 [2548]	1006	3376	1026	3477	1044	3579	1062	3681	1079	3785	1096	3889	1111	3995	1126	4101	1141	4208	1155	4316	1168	4425	1180	4534	1192	4645	1203	4756	1213	4868	—	—	—	—	—	—	—	—	—	
5500 [2595]	1022	3541	1040	3644	1058	3749	1075	3854	1092	3960	1108	4067	1123	4175	1137	4283	1151	4393	1164	4503	1177	4614	1188	4726	1199	4839	1210	4953	1219	5068	—	—	—	—	—	—	—	—	—	
5600 [2643]	1037	3712	1055	3818	1072	3924	1089	4032	1105	4141	1120	4250	1134	4361	1148	4472	1161	4584	1174	4697	1185	4810	1196	4925	1207	5040	1216	5156	—	—	—	—	—	—	—	—	—	—	—	
5700 [2690]	1052	3888	1069	3997	1086	4106	1102	4217	1117	4328	1132	4440	1145	4552	1159	4666	1171	4780	1183	4896	1194	5012	1204	5129	1214	5247	—	—	—	—	—	—	—	—	—	—	—	—	—	
5800 [2737]	1067	4071	1083	4182	1099	4294	1115	4407	1129	4520	1143	4635	1156	4750	1169	4866	1181	4983	1192	5101	1202	5220	1212	5339	1221	5460	—	—	—	—	—	—	—	—	—	—	—	—	—	
5900 [2784]	1081	4260	1097	4374	1113	4488	1127	4603	1141	4719	1154	4836	1167	4954	1179	5073	1190	5192	1200	5312	1210	5433	1219	5555	—	—	—	—	—	—	—	—	—	—	—	—	—	—	—	
6000 [2831]	1095	4455	1111	4571	1126	4688	1139	4805	1153	4924	1165	5043	1177	5164	1188	5285	1199	5407	1209	5529	1218	5653	—	—	—	—	—	—	—	—	—	—	—	—	—	—	—	—	—	

NOTE: A/F-Drive left of bold line, B/G-Drive right of bold line.

Drive Package	A						B					
Motor H.P. [W]	3 [2237.1]						5 [3728.5]					
Blower Sheave	AK71H						AK79H					
Motor Sheave	1VL44*7/8						1VP60*1x1/2					
Belt	A48						A52					
Turns Open	0	1	**2**	3	4	5	0	1	2	3	4	**5**
RPM	1002	955	**909**	862	813	765	1208	1171	1127	1084	1038	**995**

NOTES: 1. Factory sheave settings are shown in bold type.
2. Do not set motor sheave below minimum or maximum turns open shown.
3. Re-adjustment of sheave required to achieve rated airflow at AHRI minimum External Static Pressure
4. Drive data shown is for horizontal airflow with dry coil. Add component resistance (below) to duct resistance to determine total External Static Pressure.

Airflow	AIRFLOW CORRECTION FACTORS *			COMPONENT AIRFLOW RESISTANCE			
				Wet Coil	Horizontal Economizer RA Damper Open	Concentric Diffuser RXRN-AEF3618 & Concentric Adapter RXMC-DD03 (Flush)	Concentric Diffuser RXRN-AED3618 & Concentric Adapter RXMC-DD03 (Drop)
CFM [L/s]	Total MBH	Sensible MBH	Power kW	Resistance — Inches of Water [kPa]			
4000 [1888]	1.01	1.03	1.01	0.15 [.04]	0.73 [0.18]	0.76 [.19]	0.68 [.17]
4100 [1935]	1.02	1.04	1.01	0.16 [.04]	0.78 [0.19]	0.79 [.20]	0.72 [.18]
4200 [1982]	1.02	1.06	1.01	0.17 [.04]	0.83 [0.21]	0.82 [.20]	0.75 [.19]
4300 [2029]	1.03	1.07	1.01	0.17 [.04]	0.88 [0.22]	0.86 [.21]	0.79 [.20]
4400 [2076]	1.03	1.08	1.01	0.18 [.05]	0.93 [0.23]	0.90 [.22]	0.83 [.21]
4500 [2123]	1.04	1.09	1.02	0.19 [.05]	0.98 [0.24]	0.94 [.23]	0.86 [.21]
4600 [2171]	1.04	1.11	1.02	0.20 [.05]	1.03 [0.26]	0.98 [.24]	0.89 [.22]
4700 [2218]	1.05	1.12	1.02	0.21 [.05]	1.07 [0.27]	1.02 [.25]	0.94 [.23]
4800 [2265]	1.05	1.13	1.02	0.21 [.05]	1.12 [0.28]	1.06 [.26]	0.98 [.24]
4900 [2312]	1.06	1.14	1.02	0.22 [.06]	1.17 [0.29]	1.10 [.27]	1.01 [.25]
5000 [2359]	1.06	1.16	1.03	0.23 [.06]	1.21 [0.30]	1.14 [.28]	1.04 [.26]
5100 [2407]	1.07	1.17	1.03	0.24 [.06]	1.26 [0.31]	1.18 [.29]	1.07 [.27]
5200 [2454]	1.07	1.18	1.03	0.25 [.06]	1.30 [0.32]	1.22 [.30]	1.10 [.27]
5300 [2501]	1.08	1.19	1.03	0.26 [.06]	1.35 [0.34]	1.27 [.32]	1.15 [.29]
5400 [2548]	1.08	1.21	1.03	0.27 [.07]	1.39 [0.35]	1.33 [.33]	1.20 [.30]
5500 [2595]	1.09	1.22	1.04	0.28 [.07]	1.44 [0.36]	1.37 [.34]	1.25 [.31]
5600 [2643]	1.09	1.23	1.04	0.29 [.07]	1.48 [0.37]	1.42 [.35]	1.30 [.32]
5700 [2690]	1.10	1.24	1.04	0.30 [.07]	1.52 [0.38]	1.47 [.37]	1.34 [.33]
5800 [2737]	1.10	1.26	1.04	0.31 [.08]	1.57 [0.39]	1.52 [.38]	1.38 [.34]
5900 [2784]	1.10	1.27	1.05	0.32 [.08]	1.61 [0.40]	1.56 [.39]	1.42 [.35]
6000 [2831]	1.11	1.28	1.05	0.33 [.08]	1.65 [0.41]	1.60 [.40]	1.45 [.36]

* Multiply correction factor times gross performance data — resulting sensible capacity cannot exceed total capacity.

[ ] Designates Metric Conversions

AIRFLOW PERFORMANCE — 10 TON [35.1kW] — 60 Hz — DOWNFLOW

Air Flow CFM [L/s]	Model (-)GEDZ*120* Voltage 208/230, 460, 575 — 3 phase 60 Hz External Static Pressure — Inches of Water [kPa]																																					
	0.1 [.02]		0.2 [.05]		0.3 [.07]		0.4 [.10]		0.5 [.12]		0.6 [.15]		0.7 [.17]		0.8 [.20]		0.9 [.22]		1.0 [.25]		1.1 [.27]		1.2 [.30]		1.3 [.32]		1.4 [.35]		1.5 [.37]		1.6 [.40]		1.7 [.42]		1.8 [.45]		1.9 [.47]		2.0 [.50]	
	RPM	W	RPM	W	RPM	W	RPM	W	RPM	W	RPM	W	RPM	W	RPM	W	RPM	W	RPM	W	RPM	W	RPM	W	RPM	W	RPM	W	RPM	W	RPM	W	RPM	W	RPM	W	RPM	W
3200 [1510]	597	1046	629	1092	661	1141	692	1191	723	1242	753	1296	782	1351	811	1409	839	1468	867	1528	893	1591	920	1655	945	1722	970	1790	994	1859	1018	1931	1041	2004	1064	2080	1085	2157	1107	2236
3300 [1557]	610	1092	642	1141	674	1192	705	1244	735	1299	764	1355	793	1413	822	1473	849	1535	876	1599	903	1664	928	1731	954	1800	978	1871	1002	1943	1025	2018	1048	2094	1070	2172	1091	2251	1112	2333
3400 [1604]	624	1142	655	1194	686	1247	717	1303	747	1360	776	1419	804	1480	832	1542	859	1607	886	1673	912	1741	937	1811	962	1883	986	1956	1010	2031	1032	2108	1055	2187	1076	2268	1097	2350	1117	2435
3500 [1652]	638	1196	669	1251	699	1307	729	1365	759	1425	787	1487	815	1550	843	1616	870	1683	896	1752	921	1823	946	1895	971	1969	994	2046	1017	2124	1040	2203	1061	2285	1083	2368	1103	2454	1123	2541
3600 [1699]	651	1255	682	1312	712	1371	742	1432	771	1494	799	1559	827	1625	854	1693	880	1763	906	1835	931	1908	955	1984	979	2061	1003	2140	1025	2220	1047	2303	1068	2387	1089	2473	1109	2561	1129	2651
3700 [1746]	665	1317	696	1377	725	1439	755	1503	783	1568	811	1635	838	1704	865	1775	891	1848	916	1922	941	1998	965	2076	988	2156	1011	2238	1033	2321	1055	2406	1075	2493	1096	2582	1115	2673	1134	2765
3800 [1793]	679	1385	709	1447	739	1512	767	1578	795	1646	823	1716	850	1788	876	1861	901	1937	926	2014	950	2093	974	2173	997	2256	1019	2340	1041	2426	1062	2514	1083	2604	1102	2696	1122	2789	1140	2884
3900 [1840]	693	1456	723	1521	752	1589	780	1658	808	1728	835	1801	861	1875	887	1952	912	2030	936	2110	960	2191	983	2275	1006	2360	1028	2447	1049	2536	1070	2627	1090	2719	1109	2813	1128	2909	1146	3007
4000 [1888]	708	1532	737	1600	765	1670	793	1741	820	1815	847	1890	873	1967	898	2046	923	2127	947	2210	970	2294	993	2380	1015	2468	1036	2558	1057	2650	1077	2743	1097	2838	1116	2935	1134	3034	1152	3135
4100 [1935]	722	1612	751	1682	779	1755	806	1830	833	1906	859	1984	884	2064	909	2145	933	2229	957	2314	980	2401	1002	2490	1024	2581	1045	2673	1065	2768	1085	2864	1104	2962	1123	3061	1141	3163	1158	3266
4200 [1982]	736	1696	765	1769	792	1845	819	1922	845	2001	871	2082	896	2164	921	2249	944	2335	968	2423	990	2513	1012	2604	1033	2698	1054	2793	1074	2890	1093	2989	1112	3090	1130	3192	1147	3296	1164	3402
4300 [2029]	751	1784	779	1861	806	1939	832	2019	858	2100	883	2184	908	2269	932	2356	955	2445	978	2536	1000	2629	1022	2723	1043	2819	1063	2917	1082	3017	1101	3118	1119	3222	1137	3327	1154	3434	—	—
4400 [2076]	765	1877	793	1956	820	2037	846	2120	871	2204	896	2290	920	2378	944	2468	967	2560	989	2653	1010	2749	1032	2846	1052	2945	1072	3045	1091	3148	1109	3252	1127	3358	1144	3466	1161	3576	—	—
4500 [2123]	780	1974	807	2056	833	2140	859	2225	884	2312	908	2401	932	2492	955	2584	978	2679	1000	2775	1021	2873	1041	2973	1061	3074	1081	3178	1099	3283	1117	3390	1135	3499	1152	3609	1168	3722	—	—
4600 [2171]	795	2076	821	2160	847	2246	872	2335	897	2424	921	2516	944	2610	967	2705	989	2802	1010	2901	1031	3002	1051	3104	1071	3208	1090	3314	1108	3422	1126	3532	1143	3644	1159	3757	—	—	—	—
4700 [2218]	810	2181	836	2269	861	2358	886	2448	910	2541	934	2635	957	2732	979	2830	1000	2929	1021	3031	1042	3134	1062	3240	1081	3347	1099	3455	1117	3566	1134	3679	1151	3793	1167	3909	—	—	—	—
4800 [2265]	825	2291	850	2381	875	2473	900	2567	923	2662	946	2759	969	2858	991	2959	1012	3061	1033	3165	1052	3272	1072	3380	1090	3489	1108	3601	1126	3714	1143	3829	1159	3946	—	—	—	—	—	—

NOTE: A/F-Drive left of bold line, B/G-Drive right of bold line, C/H-Drive right of double line.

Drive Package	A/F						B/G						C/H					
Motor H.P. [W]	2 [1491.4]						3 [2237.1]						3 [2237.1]					
Blower Sheave	AK79H						AK79H						AK79H					
Motor Sheave	1VL40*7/8						1VP50*7/8						1VP56*7/8					
Belt	A49						A50						A51					
Turns Open	0	1	**2**	3	4	5	0	1	2	3	4	**5**	0	1	2	3	4	**5**
RPM	802	758	**710**	661	616	559	1040	999	955	911	868	**824**	1155	1120	1080	1039	996	**953**

NOTES: 1. Factory sheave settings are shown in bold type.
2. Do not set motor sheave below minimum or maximum turns open shown.
3. Re-adjustment of sheave required to achieve rated airflow at AHRI minimum External Static Pressure
4. Drive data shown is for vertical airflow with dry coil. Add component resistance (below) to duct resistance to determine total External Static Pressure.

Airflow	AIRFLOW CORRECTION FACTORS *			COMPONENT AIRFLOW RESISTANCE			
				Wet Coil	Vertical Economizer RA Damper Open	Concentric Diffuser RXRN-AEF3415 & Diffuser RXMC-DD02 (Flush)	Concentric Diffuser RXRN-AED3415 & Diffuser RXMC-DD02 (Drop)
CFM [L/s]	Total MBH	Sensible MBH	Power kW	Resistance — Inches of Water [kPa]			
3200 [1510]	0.97	0.93	0.99	0.10 [.02]	0.07 [.02]	0.74 [.18]	0.56 [.14]
3300 [1557]	0.98	0.94	0.99	0.10 [.03]	0.08 [.02]	0.79 [.20]	0.59 [.15]
3400 [1604]	0.98	0.96	0.99	0.11 [.03]	0.09 [.02]	0.84 [.21]	0.62 [.15]
3500 [1652]	0.99	0.97	1.00	0.11 [.03]	0.10 [.02]	0.90 [.22]	0.66 [.16]
3600 [1699]	0.99	0.98	1.00	0.12 [.03]	0.11 [.03]	0.95 [.24]	0.69 [.17]
3700 [1746]	1.00	0.99	1.00	0.13 [.03]	0.12 [.03]	1.00 [.25]	0.73 [.18]
3800 [1793]	1.00	1.01	1.00	0.13 [.03]	0.13 [.03]	1.04 [.26]	0.76 [.19]
3900 [1840]	1.01	1.02	1.00	0.14 [.04]	0.15 [.04]	1.09 [.27]	0.80 [.20]
4000 [1888]	1.01	1.03	1.01	0.15 [.04]	0.16 [.04]	1.13 [.28]	0.84 [.21]
4100 [1935]	1.02	1.04	1.01	0.15 [.04]	0.17 [.04]	1.19 [.30]	0.88 [.22]
4200 [1982]	1.02	1.06	1.01	0.16 [.04]	0.19 [.05]	1.24 [.31]	0.92 [.23]
4300 [2029]	1.03	1.07	1.01	0.17 [.04]	0.20 [.05]	1.31 [.33]	0.97 [.24]
4400 [2076]	1.03	1.08	1.01	0.18 [.04]	0.21 [.05]	1.37 [.34]	1.02 [.25]
4500 [2123]	1.04	1.09	1.02	0.19 [.05]	0.23 [.06]	1.43 [.35]	1.07 [.27]
4600 [2171]	1.04	1.11	1.02	0.19 [.05]	0.24 [.06]	1.48 [.37]	1.11 [.28]
4700 [2218]	1.05	1.12	1.02	0.20 [.05]	0.26 [.06]	1.54 [.38]	1.15 [.29]
4800 [2265]	1.05	1.13	1.02	0.21 [.05]	0.28 [.07]	1.59 [.40]	1.19 [.30]

* Multiply correction factor times gross performance data — resulting sensible capacity cannot exceed total capacity.

[ ] Designates Metric Conversions

AIRFLOW PERFORMANCE — 10 TON [35.1kW] — 60 Hz — SIDEFLOW

Air Flow CFM [L/s]	Model (-)GEDZ*120* Voltage 208/230, 460, 5																																			
	Hz	External Static Pressure — Inches of Water [kPa]																																			
	0.1 [.02]		0.2 [.05]		0.3 [.07]		0.4 [.10]		0.5 [.12]		0.6 [.15]		0.7 [.17]		0.8 [.20]		0.9 [.22]		1.0 [.25]		1.1 [.27]		1.2 [.30]		1.3 [.32]		1.4 [.35]		1.5 [.37]		1.6 [.40]		1.7 [.42]		1.8 [.45]		1.9 [.47]		2.0 [.50]	
	RPM	W	RPM	W	RPM	W	RPM	W	RPM	W	RPM	W	RPM	W	RPM	W	RPM	W	RPM	W	RPM	W	RPM	W	RPM	W	RPM	W	RPM	W	RPM	W	RPM	W	RPM	W	RPM	W
3200 [1510]	575	1018	607	1057	637	1099	667	1143	697	1191	727	1240	756	1293	785	1348	814	1406	842	1466	870	1529	897	1595	924	1664	951	1735	978	1809	1004	1885	1030	1965	1055	2047	1080	2131	1105	2219
3300 [1557]	588	1060	618	1101	649	1146	679	1192	708	1242	737	1294	766	1349	795	1406	823	1466	850	1529	878	1595	905	1663	932	1734	958	1808	984	1884	1010	1963	1035	2045	1060	2129	1085	2216	1109	2306
3400 [1604]	600	1106	630	1150	660	1196	690	1245	719	1297	748	1352	776	1409	804	1469	832	1531	859	1597	886	1664	913	1735	939	1808	965	1884	990	1963	1016	2044	1040	2128	1065	2215	1089	2305	1113	2397
3500 [1652]	613	1156	643	1202	672	1251	701	1302	730	1357	758	1413	786	1473	814	1535	841	1600	868	1668	894	1738	920	1811	946	1887	972	1965	997	2046	1022	2130	1046	2217	1070	2306	1094	2397	1117	2492
3600 [1699]	626	1210	655	1258	684	1310	713	1364	741	1420	769	1479	796	1541	823	1606	850	1673	877	1743	903	1816	929	1892	954	1970	979	2050	1004	2134	1028	2220	1052	2309	1076	2400	1099	2494	1122	2591
3700 [1746]	639	1268	668	1319	696	1373	724	1429	752	1488	779	1550	806	1614	833	1681	860	1751	886	1823	911	1898	937	1976	962	2056	986	2140	1011	2225	1035	2314	1058	2405	1081	2499	1104	2596	1127	2695
3800 [1793]	652	1330	680	1384	708	1440	736	1498	763	1560	790	1624	817	1690	843	1760	869	1832	895	1907	920	1984	945	2064	970	2147	994	2233	1018	2321	1041	2412	1064	2505	1087	2602	1110	2701	1132	2802
3900 [1840]	665	1397	693	1452	721	1511	748	1572	775	1636	801	1702	828	1771	854	1843	879	1917	904	1995	929	2075	954	2157	978	2242	1001	2330	1025	2421	1048	2514	1071	2610	1093	2709	1115	2810	1137	2914
4000 [1888]	678	1467	706	1525	733	1586	760	1650	787	1716	813	1785	839	1856	864	1930	889	2007	914	2087	938	2169	962	2254	986	2341	1009	2432	1032	2525	1055	2620	1077	2719	1099	2820	1121	2923	1142	3030
4100 [1935]	692	1542	719	1602	746	1666	772	1731	798	1800	824	1871	850	1945	875	2022	899	2101	923	2183	947	2267	971	2355	994	2445	1017	2537	1040	2633	1062	2731	1084	2831	1105	2935	1126	3041	1147	3150
4200 [1982]	706	1621	732	1684	759	1749	785	1817	810	1888	836	1962	861	2038	885	2117	909	2199	933	2283	957	2370	980	2460	1003	2552	1025	2647	1047	2745	1069	2845	1091	2948	1112	3054	1132	3163	1153	3274
4300 [2029]	720	1704	746	1769	772	1837	797	1907	823	1981	847	2057	872	2135	896	2217	920	2301	943	2387	966	2477	989	2569	1012	2664	1034	2761	1055	2861	1077	2964	1098	3069	1118	3178	1139	3288	1158	3402
4400 [2076]	734	1791	760	1858	785	1928	810	2001	835	2077	859	2155	883	2237	907	2320	931	2407	954	2496	976	2587	999	2682	1020	2779	1042	2879	1063	2981	1084	3087	1105	3195	1125	3305	1145	3418	—	—
4500 [2123]	748	1882	773	1952	798	2024	823	2100	847	2178	871	2259	895	2342	918	2428	941	2517	964	2608	986	2702	1008	2799	1030	2899	1051	3001	1071	3106	1092	3214	1112	3324	1132	3437	1151	3552	—	—
4600 [2171]	762	1977	787	2049	812	2124	836	2202	860	2283	884	2366	907	2451	930	2540	952	2631	974	2725	996	2822	1018	2921	1039	3023	1059	3127	1080	3235	1100	3345	1120	3457	1139	3573	1158	3691	—	—
4700 [2218]	777	2076	801	2151	826	2228	849	2309	873	2391	896	2477	919	2565	941	2656	963	2750	985	2846	1006	2945	1027	3046	1048	3151	1068	3258	1088	3367	1108	3480	1127	3595	1146	3712	—	—	—	—
4800 [2265]	792	2180	816	2257	840	2337	863	2419	886	2504	909	2592	931	2683	953	2776	975	2872	996	2971	1017	3072	1037	3176	1058	3283	1077	3392	1097	3504	1116	3619	1135	3736	1153	3856	—	—	—	—

NOTE: A/F-Drive left of bold line, B/G-Drive right of bold line, C/H-Drive right of double line.

Drive Package	A/F						B/G						C/H					
Motor H.P. [W]	2 [1491.4]						3 [2237.1]						3 [2237.1]					
Blower Sheave	AK79H						AK79H						AK79H					
Motor Sheave	1VL40*7/8						1VP50*7/8						1VP56*7/8					
Belt	A49						A50						A51					
Turns Open	0	1	**2**	3	4	5	0	1	2	3	4	**5**	0	1	2	3	4	**5**
RPM	798	753	**707**	663	616	556	1041	998	955	912	867	**824**	1155	1119	1078	1037	994	**951**

NOTES: 1. Factory sheave settings are shown in bold type.
2. Do not set motor sheave below minimum or maximum turns open shown.
3. Re-adjustment of sheave required to achieve rated airflow at AHRI minimum External Static Pressure
4. Drive data shown is for horizontal airflow with dry coil. Add component resistance (below) to duct resistance to determine total External Static Pressure.

Airflow	AIRFLOW CORRECTION FACTORS *			COMPONENT AIRFLOW RESISTANCE			
				Wet Coil	Horizontal Economizer RA Damper Open	Concentric Diffuser RXRN-AEF3415 & Diffuser RXMC-DD02 (Flush)	Concentric Diffuser RXRN-AED3415 & Diffuser RXMC-DD02 (Drop)
CFM [L/s]	Total MBH	Sensible MBH	Power kW	Resistance — Inches of Water [kPa]			
3200 [1510]	0.97	0.93	0.99	0.10 [.02]	0.51 [0.13]	0.74 [.18]	0.56 [.14]
3300 [1557]	0.98	0.94	0.99	0.10 [.03]	0.54 [0.14]	0.79 [.20]	0.59 [.15]
3400 [1604]	0.98	0.96	0.99	0.11 [.03]	0.58 [0.14]	0.84 [.21]	0.62 [.15]
3500 [1652]	0.99	0.97	1.00	0.11 [.03]	0.62 [0.15]	0.90 [.22]	0.66 [.16]
3600 [1699]	0.99	0.98	1.00	0.12 [.03]	0.66 [0.16]	0.95 [.24]	0.69 [.17]
3700 [1746]	1.00	0.99	1.00	0.13 [.03]	0.70 [0.17]	1.00 [.25]	0.73 [.18]
3800 [1793]	1.00	1.01	1.00	0.13 [.03]	0.74 [0.18]	1.04 [.26]	0.76 [.19]
3900 [1840]	1.01	1.02	1.00	0.14 [.04]	0.77 [0.19]	1.09 [.27]	0.80 [.20]
4000 [1888]	1.01	1.03	1.01	0.15 [.04]	0.81 [0.20]	1.13 [.28]	0.84 [.21]
4100 [1935]	1.02	1.04	1.01	0.15 [.04]	0.85 [0.21]	1.19 [.30]	0.88 [.22]
4200 [1982]	1.02	1.06	1.01	0.16 [.04]	0.89 [0.22]	1.24 [.31]	0.92 [.23]
4300 [2029]	1.03	1.07	1.01	0.17 [.04]	0.93 [0.23]	1.31 [.33]	0.97 [.24]
4400 [2076]	1.03	1.08	1.01	0.18 [.04]	0.97 [0.24]	1.37 [.34]	1.02 [.25]
4500 [2123]	1.04	1.09	1.02	0.19 [.05]	1.01 [0.25]	1.43 [.35]	1.07 [.27]
4600 [2171]	1.04	1.11	1.02	0.19 [.05]	1.06 [0.26]	1.48 [.37]	1.11 [.28]
4700 [2218]	1.05	1.12	1.02	0.20 [.05]	1.10 [0.27]	1.54 [.38]	1.15 [.29]
4800 [2265]	1.05	1.13	1.02	0.21 [.05]	1.14 [0.28]	1.59 [.40]	1.19 [.30]

* Multiply correction factor times gross performance data — r sulting sensible capacity cannot exceed total capacity.

[ ] Designates Metric Conversions

AIRFLOW PERFORMANCE — 12.5 TON [43.9kW] — 60 Hz — DOWNFLOW

Air Flow CFM [L/s]	Model (-)GEDZ*150* Voltage 208/230, 460, 5 Hz — External Static Pressure — Inches of Water [kPa]																																			
	0.1 [.02]		0.2 [.05]		0.3 [.07]		0.4 [.10]		0.5 [.12]		0.6 [.15]		0.7 [.17]		0.8 [.20]		0.9 [.22]		1.0 [.25]		1.1 [.27]		1.2 [.30]		1.3 [.32]		1.4 [.35]		1.5 [.37]		1.6 [.40]		1.7 [.42]		1.8 [.45]		1.9 [.47]		2.0 [.50]	
	RPM	W	RPM	W	RPM	W	RPM	W	RPM	W	RPM	W	RPM	W	RPM	W	RPM	W	RPM	W	RPM	W	RPM	W	RPM	W	RPM	W	RPM	W	RPM	W	RPM	W	RPM	W	RPM	W
4000 [1888]	766	1776	795	1806	824	1842	851	1883	878	1931	904	1985	929	2044	953	2110	976	2181	998	2259	1019	2342	1040	2431	1059	2526	1078	2627	1096	2734	1113	2847	1129	2966	1144	3091	1158	3221	1171	3358
4100 [1935]	778	1820	807	1856	835	1897	862	1944	888	1997	913	2056	937	2120	961	2191	983	2268	1005	2350	1026	2439	1045	2533	1064	2634	1082	2740	1099	2852	1116	2970	1131	3094	1145	3224	1159	3360	1171	3502
4200 [1982]	792	1875	820	1915	847	1961	873	2014	899	2072	923	2136	947	2206	969	2282	991	2364	1012	2451	1032	2545	1051	2645	1070	2750	1087	2862	1103	2979	1119	3102	1134	3232	1147	3367	1160	3508	1172	3655
4300 [2029]	806	1938	833	1984	859	2036	885	2093	910	2156	934	2226	957	2301	979	2382	1000	2469	1020	2562	1040	2661	1058	2766	1076	2877	1092	2993	1108	3116	1123	3244	1137	3379	1150	3519	1162	3665	1174	3818
4400 [2076]	820	2012	847	2063	873	2119	898	2182	922	2251	945	2325	967	2406	989	2492	1009	2584	1029	2682	1048	2787	1065	2897	1082	3013	1098	3134	1113	3262	1128	3396	1141	3536	1154	3681	1165	3833	1176	3990
4500 [2123]	835	2095	861	2151	886	2213	911	2281	934	2355	957	2434	978	2520	999	2611	1019	2709	1038	2812	1056	2922	1073	3037	1090	3158	1105	3285	1119	3418	1133	3557	1146	3702	1158	3853	1168	4009	1178	4172
4600 [2171]	851	2187	876	2249	901	2316	925	2389	947	2468	969	2553	990	2644	1010	2740	1030	2843	1048	2952	1065	3066	1082	3187	1097	3313	1112	3445	1126	3584	1139	3728	1151	3878	1162	4034	1172	4196	1182	4363
4700 [2218]	867	2290	892	2356	916	2428	939	2507	961	2591	982	2681	1003	2777	1022	2879	1041	2987	1058	3101	1075	3220	1091	3346	1106	3478	1120	3615	1133	3759	1145	3908	1157	4063	1167	4224	1177	4391	1186	4564
4800 [2265]	884	2401	908	2473	932	2551	954	2634	975	2723	996	2819	1016	2920	1034	3027	1052	3140	1069	3259	1085	3384	1101	3515	1115	3652	1128	3795	1141	3943	1153	4098	1163	4258	1173	4425	1182	4597	1190	4775
4900 [2312]	902	2523	925	2599	948	2682	969	2771	990	2866	1010	2966	1029	3073	1047	3185	1065	3303	1081	3427	1097	3558	1111	3694	1125	3836	1138	3984	1149	4137	1160	4297	1170	4463	1180	4634	1188	4812	1195	4995
5000 [2359]	920	2653	943	2736	965	2824	986	2917	1006	3017	1025	3123	1044	3235	1061	3352	1078	3476	1093	3605	1108	3741	1122	3882	1135	4029	1147	4182	1158	4341	1169	4506	1178	4677	1187	4854	1194	5036	1201	5225
5100 [2407]	939	2794	961	2881	982	2974	1003	3073	1022	3179	1041	3289	1058	3406	1075	3529	1091	3658	1106	3792	1120	3933	1134	4079	1146	4232	1158	4390	1168	4554	1178	4725	1187	4901	1194	5083	1201	5270	1208	5464
5200 [2454]	958	2944	980	3036	1000	3135	1020	3239	1039	3349	1057	3465	1074	3588	1090	3716	1105	3849	1120	3989	1133	4135	1146	4287	1158	4444	1168	4608	1178	4777	1187	4953	1196	5134	1203	5321	1209	5514	1215	5713
5300 [2501]	978	3103	999	3201	1019	3305	1038	3414	1056	3530	1074	3651	1090	3778	1106	3912	1120	4051	1134	4196	1147	4347	1159	4504	1170	4666	1180	4835	1189	5010	1198	5190	1205	5377	1212	5569	1217	5767	1222	5972
5400 [2548]	999	3273	1019	3376	1038	3484	1057	3599	1074	3720	1091	3846	1107	3979	1122	4117	1136	4261	1149	4412	1161	4568	1172	4730	1183	4898	1192	5072	1201	5252	1209	5438	1215	5629	1221	5827	1226	6030	—	—
5500 [2595]	1020	3451	1040	3559	1058	3673	1076	3793	1093	3919	1109	4051	1124	4189	1138	4332	1152	4482	1164	4637	1176	4799	1186	4966	1196	5139	1205	5318	1213	5503	1220	5694	1226	5891	—	—	—	—	—	—
5600 [2643]	1042	3640	1061	3753	1079	3872	1096	3997	1112	4128	1128	4265	1142	4408	1156	4557	1168	4712	1180	4872	1191	5039	1201	5212	1210	5390	1218	5574	1226	5765	—	—	—	—	—	—	—	—	—	—
5700 [2690]	1064	3838	1083	3956	1100	4080	1117	4211	1132	4347	1147	4489	1161	4637	1174	4791	1186	4951	1197	5117	1207	5289	1216	5467	1225	5650	—	—	—	—	—	—	—	—	—	—	—	—	—	—
5800 [2737]	1088	4045	1105	4169	1122	4298	1138	4434	1153	4575	1167	4723	1180	4876	1192	5035	1204	5200	1214	5371	1224	5548	—	—	—	—	—	—	—	—	—	—	—	—	—	—	—	—	—	—
5900 [2784]	1111	4262	1128	4391	1144	4526	1160	4666	1174	4813	1187	4966	1200	5124	1211	5289	1222	5459	—	—	—	—	—	—	—	—	—	—	—	—	—	—	—	—	—	—	—	—	—	—
6000 [2831]	1136	4489	1152	4623	1167	4763	1182	4909	1196	5061	1208	5218	1220	5382	—	—	—	—	—	—	—	—	—	—	—	—	—	—	—	—	—	—	—	—	—	—	—	—	—	—

NOTE: A/F-Drive left of bold line, B/G-Drive right of bold line.

Drive Package	A						B					
Motor H.P. [W]	3 [1118.5]						5 [2237.1]					
Blower Sheave	AK71H						AK79H					
Motor Sheave	1VL44*7/8						1VP60*1x1/8					
Belt	A48						A52					
Turns Open	0	1	**2**	3	4	5	0	1	2	3	4	**5**
RPM	1003	958	**912**	863	814	764	1220	1171	1127	1085	1039	**994**

NOTES: 1. Factory sheave settings are shown in bold type.
2. Do not set motor sheave below minimum or maximum turns open shown.
3. Re-adjustment of sheave required to achieve rated airflow at AHRI minimum External Static Pressure
4. Drive data shown is for vertical airflow with dry coil. Add component resistance (below) to duct resistance to determine total External Static Pressure.

Airflow	AIRFLOW CORRECTION FACTORS *			COMPONENT AIRFLOW RESISTANCE			
				Wet Coil	Vertical Economizer RA Damper Open	Concentric Diffuser RXRN-AEF3618 & Concentric Adapter RXMC-DD03 (Flush)	Concentric Diffuser RXRN-AED3618 & Concentric Adapter RXMC-DD03 (Drop)
CFM [L/s]	Total MBH	Sensible MBH	Power kW	Resistance — Inches of Water [kPa]			
4000 [1888]	1.01	1.03	1.01	0.15 [.04]	0.16 [.04]	0.76 [.19]	0.68 [.17]
4100 [1935]	1.02	1.04	1.01	0.16 [.04]	0.17 [.04]	0.79 [.20]	0.72 [.18]
4200 [1982]	1.02	1.06	1.01	0.17 [.04]	0.19 [.05]	0.82 [.20]	0.75 [.19]
4300 [2029]	1.03	1.07	1.01	0.17 [.04]	0.20 [.05]	0.86 [.21]	0.79 [.20]
4400 [2076]	1.03	1.08	1.01	0.18 [.05]	0.21 [.05]	0.90 [.22]	0.83 [.21]
4500 [2123]	1.04	1.09	1.02	0.19 [.05]	0.23 [.06]	0.94 [.23]	0.86 [.21]
4600 [2171]	1.04	1.11	1.02	0.20 [.05]	0.24 [.06]	0.98 [.24]	0.89 [.22]
4700 [2218]	1.05	1.12	1.02	0.21 [.05]	0.26 [.06]	1.02 [.25]	0.94 [.23]
4800 [2265]	1.05	1.13	1.02	0.21 [.05]	0.28 [.07]	1.06 [.26]	0.98 [.24]
4900 [2312]	1.06	1.14	1.02	0.22 [.06]	0.29 [.07]	1.10 [.27]	1.01 [.25]
5000 [2359]	1.06	1.16	1.03	0.23 [.06]	0.31 [.08]	1.14 [.28]	1.04 [.26]
5100 [2407]	1.07	1.17	1.03	0.24 [.06]	0.33 [.08]	1.18 [.29]	1.07 [.27]
5200 [2454]	1.07	1.18	1.03	0.25 [.06]	0.35 [.09]	1.22 [.30]	1.10 [.27]
5300 [2501]	1.08	1.19	1.03	0.26 [.06]	0.36 [.09]	1.27 [.32]	1.15 [.29]
5400 [2548]	1.08	1.21	1.03	0.27 [.07]	0.38 [.09]	1.33 [.33]	1.20 [.30]
5500 [2595]	1.09	1.22	1.04	0.28 [.07]	0.40 [.10]	1.37 [.34]	1.25 [.31]
5600 [2643]	1.09	1.23	1.04	0.29 [.07]	0.42 [.10]	1.42 [.35]	1.30 [.32]
5700 [2690]	1.10	1.24	1.04	0.30 [.07]	0.44 [.11]	1.47 [.37]	1.34 [.33]
5800 [2737]	1.10	1.26	1.04	0.31 [.08]	0.46 [.11]	1.52 [.38]	1.38 [.34]
5900 [2784]	1.10	1.27	1.05	0.32 [.08]	0.48 [.12]	1.56 [.39]	1.42 [.35]
6000 [2831]	1.11	1.28	1.05	0.33 [.08]	0.51 [.13]	1.60 [.40]	1.45 [.36]

* Multiply correction factor times gross performance data — r sulting sensible capacity cannot exceed total capacity.

[ ] Designates Metric Conversions

AIRFLOW PERFORMANCE — 12.5 TON [43.9kW] — 60 Hz — SIDEFLOW

Air Flow CFM [L/s]	Model (-)GEDZ*150* Voltage 208/230, 460, 575 — 3 phase 60 Hz																																					
	External Static Pressure — Inches of Water [kPa]																																					
	0.1 [.02]		0.2 [.05]		0.3 [.07]		0.4 [.10]		0.5 [.12]		0.6 [.15]		0.7 [.17]		0.8 [.20]		0.9 [.22]		1.0 [.25]		1.1 [.27]		1.2 [.30]		1.3 [.32]		1.4 [.35]		1.5 [.37]		1.6 [.40]		1.7 [.42]		1.8 [.45]		1.9 [.47]		2.0 [.50]	
	RPM	W	RPM	W	RPM	W	RPM	W	RPM	W	RPM	W	RPM	W	RPM	W	RPM	W	RPM	W	RPM	W	RPM	W	RPM	W	RPM	W	RPM	W	RPM	W	RPM	W	RPM	W	RPM	W
4000 [1888]	—	—	791	1757	819	1824	846	1892	872	1961	897	2031	922	2101	946	2173	970	2245	993	2318	1015	2392	1036	2467	1057	2542	1077	2619	1096	2696	1115	2774	1133	2853	1150	2933	1167	3014	1183	
4100 [1935]	782	1773	809	1841	836	1911	863	1982	888	2053	913	2125	937	2198	961	2272	984	2346	1006	2422	1027	2498	1048	2576	1068	2654	1088	2733	1106	2812	1124	2893	1142	2975	1158	3057	1174	3140	1189	
4200 [1982]	801	1860	828	1932	854	2004	880	2077	905	2150	929	2225	952	2300	975	2377	997	2454	1019	2532	1040	2611	1060	2691	1079	2771	1098	2853	1116	2935	1133	3018	1150	3102	1166	3187	1181	3272	1196	
4300 [2029]	819	1954	845	2028	871	2102	896	2177	920	2254	944	2331	967	2409	989	2488	1011	2567	1032	2648	1052	2729	1071	2811	1090	2894	1108	2978	1125	3063	1142	3149	1158	3235	1174	3323	1188	3411	1202	
4400 [2076]	837	2053	863	2129	888	2207	912	2284	936	2363	959	2443	981	2523	1003	2605	1024	2687	1044	2770	1064	2854	1082	2938	1101	3024	1118	3110	1135	3197	1151	3286	1166	3375	1181	3464	1195	3555	1208	
4500 [2123]	855	2159	880	2237	905	2317	929	2397	952	2479	974	2561	996	2644	1016	2727	1037	2812	1056	2897	1075	2984	1093	3071	1111	3159	1128	3248	1144	3338	1159	3428	1174	3520	1188	3612	1201	3705	1214	
4600 [2171]	873	2270	898	2351	921	2433	944	2516	967	2600	988	2684	1009	2770	1030	2856	1049	2943	1068	3031	1086	3120	1104	3210	1121	3300	1137	3392	1152	3484	1167	3577	1181	3671	1195	3766	1207	3861	1219	
4700 [2218]	891	2387	914	2471	938	2556	960	2641	982	2727	1003	2814	1023	2902	1043	2991	1062	3080	1080	3171	1097	3262	1114	3354	1130	3447	1146	3541	1161	3636	1175	3732	1188	3828	1201	3925	1213	4023	—	
4800 [2265]	908	2511	931	2597	954	2684	975	2772	996	2860	1017	2950	1036	3040	1055	3132	1074	3224	1091	3317	1108	3410	1124	3505	1140	3601	1155	3697	1169	3794	1182	3892	1195	3991	1207	4091	1219	4191	—	
4900 [2312]	925	2640	947	2729	969	2818	990	2908	1011	3000	1031	3092	1050	3184	1068	3278	1086	3373	1102	3468	1119	3565	1134	3662	1149	3760	1163	3859	1177	3958	1190	4059	1202	4160	1213	4262	—	—	—	
5000 [2359]	942	2775	964	2866	985	2958	1005	3051	1025	3145	1044	3239	1062	3335	1080	3431	1097	3528	1113	3626	1129	3725	1144	3824	1158	3925	1172	4026	1185	4128	1197	4231	1208	4335	1219	4440	—	—	—	
5100 [2407]	958	2916	979	3010	1000	3104	1020	3200	1039	3296	1057	3393	1075	3491	1092	3589	1108	3689	1124	3789	1139	3891	1153	3993	1167	4096	1180	4200	1192	4304	1204	4410	1214	4516	—	—	—	—	—	
5200 [2454]	975	3063	995	3160	1015	3256	1034	3354	1053	3453	1070	3552	1087	3653	1104	3754	1120	3856	1135	3959	1149	4063	1162	4167	1175	4273	1188	4379	1199	4486	1210	4594	1220	4703	—	—	—	—	—	
5300 [2501]	991	3217	1010	3315	1030	3415	1048	3515	1066	3616	1083	3718	1100	3821	1115	3924	1130	4029	1145	4134	1158	4241	1171	4348	1184	4456	1195	4564	1206	4674	1216	4785	—	—	—	—	—	—	—	
5400 [2548]	1006	3376	1026	3477	1044	3579	1062	3681	1079	3785	1096	3889	1111	3995	1126	4101	1141	4208	1155	4316	1168	4425	1180	4534	1192	4645	1203	4756	1213	4868	—	—	—	—	—	—	—	—	—	
5500 [2595]	1022	3541	1040	3644	1058	3749	1075	3854	1092	3960	1108	4067	1123	4175	1137	4283	1151	4393	1164	4503	1177	4614	1188	4726	1199	4839	1210	4953	1219	5068	—	—	—	—	—	—	—	—	—	
5600 [2643]	1037	3712	1055	3818	1072	3924	1089	4032	1105	4141	1120	4250	1134	4361	1148	4472	1161	4584	1174	4697	1185	4810	1196	4925	1207	5040	1216	5156	—	—	—	—	—	—	—	—	—	—	—	
5700 [2690]	1052	3888	1069	3997	1086	4106	1102	4217	1117	4328	1132	4440	1145	4552	1159	4666	1171	4780	1183	4896	1194	5012	1204	5129	1214	5247	—	—	—	—	—	—	—	—	—	—	—	—	—	
5800 [2737]	1067	4071	1083	4182	1099	4294	1115	4407	1129	4520	1143	4635	1156	4750	1169	4866	1181	4983	1192	5101	1202	5220	1212	5339	1221	5460	—	—	—	—	—	—	—	—	—	—	—	—	—	
5900 [2784]	1081	4260	1097	4374	1113	4488	1127	4603	1141	4719	1154	4836	1167	4954	1179	5073	1190	5192	1200	5312	1210	5433	1219	5555	—	—	—	—	—	—	—	—	—	—	—	—	—	—	—	
6000 [2831]	1095	4455	1111	4571	1126	4688	1139	4805	1153	4924	1165	5043	1177	5164	1188	5285	1199	5407	1209	5529	1218	5653	—	—	—	—	—	—	—	—	—	—	—	—	—	—	—	—	—	

NOTE: A/F-Drive left of bold line, B/G-Drive right of bold line.

Drive Package	A						B					
Motor H.P. [W]	3 [2237.1]						5 [3728.5]					
Blower Sheave	AK71H						AK79H					
Motor Sheave	1VL44*7/8						1VP60*1x1/2					
Belt	A48						A52					
Turns Open	0	1	**2**	3	4	5	0	1	2	3	4	**5**
RPM	1002	955	**909**	862	813	765	1208	1171	1127	1084	1038	**995**

NOTES: 1. Factory sheave settings are shown in bold type.
2. Do not set motor sheave below minimum or maximum turns open shown.
3. Re-adjustment of sheave required to achieve rated airflow at AHRI minimum External Static Pressure
4. Drive data shown is for horizontal airflow with dry coil. Add component resistance (below) to duct resistance to determine total External Static Pressure.

Airflow	AIRFLOW CORRECTION FACTORS *			COMPONENT AIRFLOW RESISTANCE			
				Wet Coil	Horizontal Economizer RA Damper Open	Concentric Diffuser RXRN-AEF3618 & Concentric Adapter RXMC-DD03 (Flush)	Concentric Diffuser RXRN-AED3618 & Concentric Adapter RXMC-DD03 (Drop)
CFM [L/s]	Total MBH	Sensible MBH	Power kW	Resistance — Inches of Water [kPa]			
4000 [1888]	1.01	1.03	1.01	0.15 [.04]	0.73 [0.18]	0.76 [.19]	0.68 [.17]
4100 [1935]	1.02	1.04	1.01	0.16 [.04]	0.78 [0.19]	0.79 [.20]	0.72 [.18]
4200 [1982]	1.02	1.06	1.01	0.17 [.04]	0.83 [0.21]	0.82 [.20]	0.75 [.19]
4300 [2029]	1.03	1.07	1.01	0.17 [.04]	0.88 [0.22]	0.86 [.21]	0.79 [.20]
4400 [2076]	1.03	1.08	1.01	0.18 [.05]	0.93 [0.23]	0.90 [.22]	0.83 [.21]
4500 [2123]	1.04	1.09	1.02	0.19 [.05]	0.98 [0.24]	0.94 [.23]	0.86 [.21]
4600 [2171]	1.04	1.11	1.02	0.20 [.05]	1.03 [0.26]	0.98 [.24]	0.89 [.22]
4700 [2218]	1.05	1.12	1.02	0.21 [.05]	1.07 [0.27]	1.02 [.25]	0.94 [.23]
4800 [2265]	1.05	1.13	1.02	0.21 [.05]	1.12 [0.28]	1.06 [.26]	0.98 [.24]
4900 [2312]	1.06	1.14	1.02	0.22 [.06]	1.17 [0.29]	1.10 [.27]	1.01 [.25]
5000 [2359]	1.06	1.16	1.03	0.23 [.06]	1.21 [0.30]	1.14 [.28]	1.04 [.26]
5100 [2407]	1.07	1.17	1.03	0.24 [.06]	1.26 [0.31]	1.18 [.29]	1.07 [.27]
5200 [2454]	1.07	1.18	1.03	0.25 [.06]	1.30 [0.32]	1.22 [.30]	1.10 [.27]
5300 [2501]	1.08	1.19	1.03	0.26 [.06]	1.35 [0.34]	1.27 [.32]	1.15 [.29]
5400 [2548]	1.08	1.21	1.03	0.27 [.07]	1.39 [0.35]	1.33 [.33]	1.20 [.30]
5500 [2595]	1.09	1.22	1.04	0.28 [.07]	1.44 [0.36]	1.37 [.34]	1.25 [.31]
5600 [2643]	1.09	1.23	1.04	0.29 [.07]	1.48 [0.37]	1.42 [.35]	1.30 [.32]
5700 [2690]	1.10	1.24	1.04	0.30 [.07]	1.52 [0.38]	1.47 [.37]	1.34 [.33]
5800 [2737]	1.10	1.26	1.04	0.31 [.08]	1.57 [0.39]	1.52 [.38]	1.38 [.34]
5900 [2784]	1.10	1.27	1.05	0.32 [.08]	1.61 [0.40]	1.56 [.39]	1.42 [.35]
6000 [2831]	1.11	1.28	1.05	0.33 [.08]	1.65 [0.41]	1.60 [.40]	1.45 [.36]

* Multiply correction factor times gross performance data — resulting sensible capacity cannot exceed total capacity.

[ ] Designates Metric Conversions

COOLING PERFORMANCE DATA—(-)GEDZR090A

ENTERING INDOOR AIR @ 80°F [26.7°C] dbE ①																		
wbE			71°F [21.7°C]			67°F [19.4°C]			63°F [17.2°C]			61°F [16.1°C]			59°F [15.0°C]		
CFM [L/s]			3600 [1699]	3175 [1498]	2400 [1133]	3600 [1699]	3175 [1498]	2400 [1133]	3600 [1699]	3175 [1498]	2400 [1133]	3600 [1699]	3175 [1498]	2400 [1133]	3600 [1699]	3175 [1498]	2400 [1133]
DR ①			0.22	0.19	0.14	0.22	0.19	0.14	0.22	0.19	0.14	0.22	0.19	0.14	0.22	0.19	0.14
OUTDOOR DRY BULB TEMPERATURE °F [°C]	75 [23.9]	Total BTUH [kW]	112 [32.8]	109.4 [32.0]	104.5 [30.6]	105.4 [30.9]	102.9 [30.1]	98.3 [28.8]	100.6 [29.5]	98.2 [28.8]	93.8 [27.5]	99.2 [29.1]	96.8 [28.4]	92.5 [27.1]	98.6 [28.9]	96.3 [28.2]	92 [27.0]
		Sens BTUH [kW]	65.8 [19.3]	62 [18.2]	54.9 [16.1]	77.9 [22.8]	73.4 [21.5]	65 [19.0]	89.8 [26.3]	84.5 [24.8]	74.9 [21.9]	95.5 [28.0]	89.9 [26.4]	79.7 [23.4]	98.6 [28.9]	95.1 [27.9]	84.3 [24.7]
		Power	4.7	4.6	4.5	4.6	4.6	4.5	4.6	4.5	4.4	4.5	4.5	4.4	4.5	4.5	4.4
	80 [26.7]	Total BTUH [kW]	108.6 [31.8]	106.1 [31.1]	101.3 [29.7]	102 [29.9]	99.6 [29.2]	95.1 [27.9]	97.2 [28.5]	94.9 [27.8]	90.7 [26.6]	95.8 [28.1]	93.5 [27.4]	89.4 [26.2]	95.2 [27.9]	93 [27.2]	88.8 [26.0]
		Sens BTUH [kW]	64.1 [18.8]	60.3 [17.7]	53.4 [15.7]	76.2 [22.3]	71.7 [21.0]	63.5 [18.6]	88 [25.8]	82.9 [24.3]	73.4 [21.5]	93.8 [27.5]	88.3 [25.9]	78.2 [22.9]	95.2 [27.9]	93 [27.2]	82.8 [24.3]
		Power	5.1	5	4.9	5	4.9	4.8	4.9	4.9	4.8	4.9	4.9	4.8	4.9	4.8	4.7
	85 [29.4]	Total BTUH [kW]	105.2 [30.8]	102.7 [30.1]	98.1 [28.8]	98.5 [28.9]	96.2 [28.2]	91.9 [26.9]	93.8 [27.5]	91.5 [26.8]	87.5 [25.6]	92.3 [27.1]	90.2 [26.4]	86.2 [25.2]	91.8 [26.9]	89.6 [26.3]	85.6 [25.1]
		Sens BTUH [kW]	62.3 [18.3]	58.7 [17.2]	52 [15.2]	74.4 [21.8]	70 [20.5]	62.1 [18.2]	86.3 [25.3]	81.2 [23.8]	72 [21.1]	92 [27.0]	86.6 [25.4]	76.7 [22.5]	91.8 [26.9]	89.6 [26.3]	81.3 [23.8]
		Power	5.5	5.5	5.3	5.5	5.4	5.3	5.4	5.3	5.2	5.4	5.3	5.2	5.3	5.3	5.2
	90 [32.2]	Total BTUH [kW]	101.7 [29.8]	99.3 [29.1]	94.9 [27.8]	95.1 [27.9]	92.8 [27.2]	88.7 [26.0]	90.3 [26.5]	88.1 [25.8]	84.2 [24.7]	88.9 [26.0]	86.8 [25.4]	82.9 [24.3]	88.3 [25.9]	86.2 [25.3]	82.4 [24.1]
		Sens BTUH [kW]	60.6 [17.8]	57 [16.7]	50.5 [14.8]	72.7 [21.3]	68.4 [20.0]	60.6 [17.8]	84.6 [24.8]	79.6 [23.3]	70.5 [20.7]	88.9 [26.0]	85 [24.9]	75.3 [22.1]	88.3 [25.9]	86.2 [25.3]	79.9 [23.4]
		Power	6.1	6	5.9	6	5.9	5.8	5.9	5.9	5.7	5.9	5.8	5.7	5.9	5.8	5.7
	95 [35]	Total BTUH [kW]	98.2 [28.8]	95.9 [28.1]	91.6 [26.9]	91.6 [26.8]	89.4 [26.2]	85.4 [25.0]	86.8 [25.4]	84.7 [24.8]	81 [23.7]	85.4 [25.0]	83.3 [24.4]	79.6 [23.3]	84.8 [24.9]	82.8 [24.3]	79.1 [23.2]
		Sens BTUH [kW]	58.9 [17.3]	55.4 [16.2]	49.1 [14.4]	71 [20.8]	66.8 [19.6]	59.2 [17.3]	82.8 [24.3]	78 [22.8]	69.1 [20.2]	85.4 [25.0]	83.3 [24.4]	73.9 [21.6]	84.8 [24.9]	82.8 [24.3]	78.5 [23.0]
		Power	6.7	6.6	6.5	6.6	6.5	6.4	6.6	6.5	6.3	6.5	6.5	6.3	6.5	6.4	6.3
	100 [37.8]	Total BTUH [kW]	94.7 [27.7]	92.4 [27.1]	88.3 [25.9]	88 [25.8]	85.9 [25.2]	82.1 [24.1]	83.2 [24.4]	81.3 [23.8]	77.6 [22.8]	81.8 [24.0]	79.9 [23.4]	76.3 [22.4]	81.3 [23.8]	79.3 [23.3]	75.8 [22.2]
		Sens BTUH [kW]	57.2 [16.8]	53.8 [15.8]	47.7 [14.0]	69.3 [20.3]	65.2 [19.1]	57.8 [16.9]	81.1 [23.8]	76.4 [22.4]	67.7 [19.8]	81.8 [24.0]	79.9 [23.4]	72.5 [21.2]	81.3 [23.8]	79.3 [23.3]	75.8 [22.2]
		Power	7.4	7.3	7.1	7.3	7.2	7.1	7.2	7.2	7	7.2	7.1	7	7.2	7.1	7
	105 [40.6]	Total BTUH [kW]	91.1 [26.7]	88.9 [26.1]	85 [24.9]	84.4 [24.7]	82.4 [24.2]	78.8 [23.1]	79.7 [23.3]	77.8 [22.8]	74.3 [21.8]	78.2 [22.9]	76.4 [22.4]	73 [21.4]	77.7 [22.8]	75.9 [22.2]	72.5 [21.2]
		Sens BTUH [kW]	55.5 [16.3]	52.2 [15.3]	46.3 [13.6]	67.6 [19.8]	63.6 [18.6]	56.4 [16.5]	79.5 [23.3]	74.8 [21.9]	66.3 [19.4]	78.2 [22.9]	76.4 [22.4]	71.1 [20.8]	77.7 [22.8]	75.9 [22.2]	72.5 [21.2]
		Power	8.1	8	7.9	8.1	8	7.8	8	7.9	7.8	8	7.9	7.7	8	7.9	7.7
	110 [43.3]	Total BTUH [kW]	87.5 [25.6]	85.4 [25.0]	81.6 [23.9]	80.8 [23.7]	78.9 [23.1]	75.4 [22.1]	76 [22.3]	74.2 [21.8]	70.9 [20.8]	74.6 [21.9]	72.9 [21.3]	69.6 [20.4]	74.1 [21.7]	72.3 [21.2]	69.1 [20.3]
		Sens BTUH [kW]	53.8 [15.8]	50.7 [14.8]	44.9 [13.2]	65.9 [19.3]	62.1 [18.2]	55 [16.1]	76 [22.3]	73.2 [21.5]	64.9 [19.0]	74.6 [21.9]	72.9 [21.3]	69.6 [20.4]	74.1 [21.7]	72.3 [21.2]	69.1 [20.3]
		Power	9	8.9	8.7	8.9	8.8	8.6	8.9	8.8	8.6	8.8	8.7	8.5	8.8	8.7	8.5
	115 [46.1]	Total BTUH [kW]	83.8 [24.6]	81.8 [24.0]	78.2 [22.9]	77.2 [22.6]	75.3 [22.1]	72 [21.1]	72.4 [21.2]	70.7 [20.7]	67.5 [19.8]	71 [20.8]	69.3 [20.3]	66.2 [19.4]	70.4 [20.6]	68.8 [20.1]	65.7 [19.3]
		Sens BTUH [kW]	52.2 [15.3]	49.1 [14.4]	43.5 [12.8]	64.3 [18.8]	60.5 [17.7]	53.6 [15.7]	72.4 [21.2]	70.7 [20.7]	63.5 [18.6]	71 [20.8]	69.3 [20.3]	66.2 [19.4]	70.4 [20.6]	68.8 [20.1]	65.7 [19.3]
		Power	9.9	9.8	9.6	9.8	9.7	9.5	9.8	9.7	9.5	9.8	9.6	9.4	9.7	9.6	9.4
	120 [48.9]	Total BTUH [kW]	80.1 [23.5]	78.2 [22.9]	74.8 [21.9]	73.5 [21.5]	71.7 [21.0]	68.5 [20.1]	68.7 [20.1]	67.1 [19.6]	64.1 [18.8]	67.3 [19.7]	65.7 [19.2]	62.8 [18.4]	66.7 [19.6]	65.1 [19.1]	62.3 [18.2]
		Sens BTUH [kW]	50.6 [14.8]	47.6 [14.0]	42.2 [12.4]	62.7 [18.4]	59 [17.3]	52.3 [15.3]	68.7 [20.1]	67.1 [19.6]	62.2 [18.2]	67.3 [19.7]	65.7 [19.2]	62.8 [18.4]	66.7 [19.6]	65.1 [19.1]	62.3 [18.2]
		Power	10.9	10.8	10.5	10.8	10.7	10.5	10.8	10.7	10.4	10.7	10.6	10.4	10.7	10.6	10.4
	125 [51.7]	Total BTUH [kW]	76.4 [22.4]	74.6 [21.9]	71.3 [20.9]	69.7 [20.4]	68.1 [20.0]	65.1 [19.1]	65 [19.0]	63.4 [18.6]	60.6 [17.8]	63.5 [18.6]	62 [18.2]	59.3 [17.4]	63 [18.5]	61.5 [18.0]	58.8 [17.2]
		Sens BTUH [kW]	49 [14.4]	46.1 [13.5]	40.8 [12.0]	61.1 [17.9]	57.5 [16.8]	50.9 [14.9]	65 [19.0]	63.4 [18.6]	60.6 [17.8]	63.5 [18.6]	62 [18.2]	59.3 [17.4]	63 [18.5]	61.5 [18.0]	58.8 [17.2]
		Power	12	11.8	11.6	11.9	11.8	11.5	11.9	11.7	11.5	11.8	11.7	11.4	11.8	11.7	11.4

DR —Depression ratio
dbE —Entering air dry bulb
wbE —Entering air wet bulb

Total —Total capacity x 1000 BTUH
Sens —Sensible capacity x 1000 BTUH
Power —KW input

NOTES: ① When the entering air dry bulb is other than 80°F [27°C], adjust the sensible capacity from the table by adding [1.10 x CFM x (1 – DR) x (dbE – 80)].

[ ] Designates Metric Conversions

COOLING PERFORMANCE DATA—(-)GEDZR102A

ENTERING INDOOR AIR @ 80°F [26.7°C] dbE ①																		
wbE			71°F [21.7°C]			67°F [19.4°C]			63°F [17.2°C]			61°F [16.1°C]			59°F [15.0°C]		
CFM [L/s]			4100 [1935]	3200 [1510]	2700 [1274]	4100 [1935]	3200 [1510]	2700 [1274]	4100 [1935]	3200 [1510]	2700 [1274]	4100 [1935]	3200 [1510]	2700 [1274]	4100 [1935]	3200 [1510]	2700 [1274]
DR ①			0.21	0.17	0.14	0.21	0.17	0.14	0.21	0.17	0.14	0.21	0.17	0.14	0.21	0.17	0.14
OUTDOOR DRY BULB TEMPERATURE °F [°C]	75 [23.9]	Total BTUH [kW]	129.7 [38.0]	123.4 [36.2]	119.9 [35.1]	122.5 [35.9]	116.6 [34.2]	113.3 [33.2]	118.1 [34.6]	112.4 [32.9]	109.2 [32.0]	117.3 [34.4]	111.6 [32.7]	108.4 [31.8]	117.8 [34.5]	112.1 [32.8]	108.9 [31.9]
		Sens BTUH [kW]	75.5 [22.1]	66.7 [19.5]	61.8 [18.1]	90.5 [26.5]	80 [23.4]	74.2 [21.7]	104.2 [30.5]	92.1 [27.0]	85.4 [25.0]	110.3 [32.3]	97.5 [28.6]	90.4 [26.5]	115.6 [33.9]	102.2 [29.9]	94.7 [27.8]
		Power	6.2	6	5.9	6.1	6	5.9	6	5.9	5.8	6	5.9	5.8	6	5.8	5.8
	80 [26.7]	Total BTUH [kW]	125.5 [36.8]	119.4 [35.0]	116 [34.0]	118.3 [34.7]	112.5 [33.0]	109.3 [32.0]	113.9 [33.4]	108.3 [31.7]	105.3 [30.8]	113.1 [33.1]	107.6 [31.5]	104.5 [30.6]	113.6 [33.3]	108 [31.7]	105 [30.8]
		Sens BTUH [kW]	73.3 [21.5]	64.8 [19.0]	60.1 [17.6]	88.4 [25.9]	78.2 [22.9]	72.5 [21.2]	102.1 [29.9]	90.3 [26.5]	83.7 [24.5]	108.2 [31.7]	95.6 [28.0]	88.7 [26.0]	113.5 [33.3]	100.3 [29.4]	93 [27.3]
		Power	6.5	6.4	6.3	6.5	6.3	6.2	6.4	6.2	6.2	6.4	6.2	6.1	6.3	6.2	6.1
	85 [29.4]	Total BTUH [kW]	121.2 [35.5]	115.3 [33.8]	112.1 [32.8]	114 [33.4]	108.5 [31.8]	105.4 [30.9]	109.6 [32.1]	104.3 [30.6]	101.3 [29.7]	108.8 [31.9]	103.6 [30.3]	100.6 [29.5]	109.3 [32.0]	104 [30.5]	101 [29.6]
		Sens BTUH [kW]	71.2 [20.9]	62.9 [18.4]	58.4 [17.1]	86.3 [25.3]	76.3 [22.3]	70.7 [20.7]	100 [29.3]	88.4 [25.9]	81.9 [24.0]	106 [31.1]	93.7 [27.5]	86.9 [25.5]	109.3 [32.0]	98.4 [28.8]	91.3 [26.7]
		Power	6.9	6.7	6.7	6.8	6.7	6.6	6.8	6.6	6.5	6.7	6.6	6.5	6.7	6.6	6.5
	90 [32.2]	Total BTUH [kW]	117 [34.3]	111.3 [32.6]	108.1 [31.7]	109.8 [32.2]	104.4 [30.6]	101.5 [29.7]	105.4 [30.9]	100.2 [29.4]	97.4 [28.5]	104.6 [30.6]	99.5 [29.2]	96.7 [28.3]	105.1 [30.8]	99.9 [29.3]	97.1 [28.5]
		Sens BTUH [kW]	69 [20.2]	61 [17.9]	56.6 [16.6]	84.1 [24.6]	74.3 [21.8]	68.9 [20.2]	97.8 [28.7]	86.5 [25.3]	80.2 [23.5]	103.9 [30.4]	91.8 [26.9]	85.1 [24.9]	105.1 [30.8]	96.5 [28.3]	89.5 [26.2]
		Power	7.3	7.2	7.1	7.3	7.1	7	7.2	7	6.9	7.2	7	6.9	7.1	7	6.9
	95 [35]	Total BTUH [kW]	112.7 [33.0]	107.2 [31.4]	104.2 [30.5]	105.5 [30.9]	100.4 [29.4]	97.5 [28.6]	101.1 [29.6]	96.2 [28.2]	93.4 [27.4]	100.3 [29.4]	95.4 [28.0]	92.7 [27.2]	100.8 [29.5]	95.9 [28.1]	93.2 [27.3]
		Sens BTUH [kW]	66.8 [19.6]	59.1 [17.3]	54.8 [16.0]	81.9 [24.0]	72.4 [21.2]	67.1 [19.7]	95.6 [28.0]	84.5 [24.8]	78.3 [23.0]	100.3 [29.4]	89.8 [26.3]	83.3 [24.4]	100.8 [29.5]	94.5 [27.7]	87.7 [25.7]
		Power	7.8	7.6	7.5	7.7	7.5	7.4	7.6	7.5	7.4	7.6	7.4	7.3	7.6	7.4	7.3
	100 [37.8]	Total BTUH [kW]	108.4 [31.8]	103.1 [30.2]	100.2 [29.4]	101.2 [29.7]	96.3 [28.2]	93.6 [27.4]	96.8 [28.4]	92.1 [27.0]	89.5 [26.2]	96 [28.1]	91.3 [26.8]	88.8 [26.0]	96.5 [28.3]	91.8 [26.9]	89.2 [26.1]
		Sens BTUH [kW]	64.6 [18.9]	57.1 [16.7]	52.9 [15.5]	79.6 [23.3]	70.4 [20.6]	65.2 [19.1]	93.3 [27.3]	82.5 [24.2]	76.5 [22.4]	96 [28.1]	87.9 [25.7]	81.4 [23.9]	96.5 [28.3]	91.8 [26.9]	85.8 [25.1]
		Power	8.3	8.1	7.9	8.2	8	7.9	8.1	7.9	7.8	8.1	7.9	7.8	8.1	7.9	7.8
	105 [40.6]	Total BTUH [kW]	104.1 [30.5]	99 [29.0]	96.2 [28.2]	96.9 [28.4]	92.2 [27.0]	89.6 [26.2]	92.5 [27.1]	88 [25.8]	85.5 [25.1]	91.7 [26.9]	87.2 [25.6]	84.8 [24.8]	92.2 [27.0]	87.7 [25.7]	85.2 [25.0]
		Sens BTUH [kW]	62.3 [18.2]	55 [16.1]	51 [15.0]	77.3 [22.7]	68.3 [20.0]	63.4 [18.6]	91 [26.7]	80.5 [23.6]	74.6 [21.9]	91.7 [26.9]	85.8 [25.1]	79.6 [23.3]	92.2 [27.0]	87.7 [25.7]	83.9 [24.6]
		Power	8.8	8.6	8.4	8.7	8.5	8.4	8.6	8.4	8.3	8.6	8.4	8.3	8.6	8.4	8.2
	110 [43.3]	Total BTUH [kW]	99.8 [29.2]	94.9 [27.8]	92.2 [27.0]	92.6 [27.1]	88.1 [25.8]	85.6 [25.1]	88.2 [25.8]	83.9 [24.6]	81.5 [23.9]	87.4 [25.6]	83.1 [24.4]	80.8 [23.7]	87.9 [25.7]	83.6 [24.5]	81.2 [23.8]
		Sens BTUH [kW]	59.9 [17.6]	53 [15.5]	49.1 [14.4]	75 [22.0]	66.3 [19.4]	61.5 [18.0]	88.2 [25.8]	78.4 [23.0]	72.7 [21.3]	87.4 [25.6]	83.1 [24.4]	77.6 [22.8]	87.9 [25.7]	83.6 [24.5]	81.2 [23.8]
		Power	9.3	9.1	9	9.2	9	8.9	9.2	9	8.8	9.1	8.9	8.8	9.1	8.9	8.8
	115 [46.1]	Total BTUH [kW]	95.4 [28.0]	90.8 [26.6]	88.2 [25.9]	88.3 [25.9]	84 [24.6]	81.6 [23.9]	83.8 [24.6]	79.7 [23.4]	77.5 [22.7]	83.1 [24.3]	79 [23.2]	76.8 [22.5]	83.5 [24.5]	79.5 [23.3]	77.2 [22.6]
		Sens BTUH [kW]	57.5 [16.9]	50.9 [14.9]	47.2 [13.8]	72.6 [21.3]	64.2 [18.8]	59.5 [17.4]	83.8 [24.6]	76.3 [22.4]	70.7 [20.7]	83.1 [24.3]	79 [23.2]	75.7 [22.2]	83.5 [24.5]	79.5 [23.3]	77.2 [22.6]
		Power	9.9	9.6	9.5	9.8	9.6	9.4	9.8	9.5	9.4	9.7	9.5	9.4	9.7	9.5	9.3
	120 [48.9]	Total BTUH [kW]	91.1 [26.7]	86.7 [25.4]	84.2 [24.7]	83.9 [24.6]	79.8 [23.4]	77.6 [22.7]	79.5 [23.3]	75.6 [22.2]	73.5 [21.5]	78.7 [23.1]	74.9 [21.9]	72.7 [21.3]	79.2 [23.2]	75.3 [22.1]	73.2 [21.4]
		Sens BTUH [kW]	55.1 [16.2]	48.7 [14.3]	45.2 [13.2]	70.2 [20.6]	62.1 [18.2]	57.5 [16.9]	79.5 [23.3]	74.2 [21.7]	68.8 [20.1]	78.7 [23.1]	74.9 [21.9]	72.7 [21.3]	79.2 [23.2]	75.3 [22.1]	73.2 [21.4]
		Power	10.5	10.2	10.1	10.4	10.2	10	10.4	10.1	10	10.3	10.1	9.9	10.3	10	9.9
	125 [51.7]	Total BTUH [kW]	86.7 [25.4]	82.5 [24.2]	80.2 [23.5]	79.5 [23.3]	75.7 [22.2]	73.5 [21.5]	75.1 [22.0]	71.5 [20.9]	69.4 [20.3]	74.3 [21.8]	70.7 [20.7]	68.7 [20.1]	74.8 [21.9]	71.2 [20.9]	69.1 [20.3]
		Sens BTUH [kW]	52.7 [15.4]	46.6 [13.6]	43.2 [12.7]	67.7 [19.9]	59.9 [17.5]	55.5 [16.3]	75.1 [22.0]	71.5 [20.9]	66.8 [19.6]	74.3 [21.8]	70.7 [20.7]	68.7 [20.1]	74.8 [21.9]	71.2 [20.9]	69.1 [20.3]
		Power	11.1	10.9	10.7	11.1	10.8	10.6	11	10.7	10.6	11	10.7	10.5	10.9	10.7	10.5

DR —Depression ratio
dbE —Entering air dry bulb
wbE—Entering air wet bulb

Total —Total capacity x 1000 BTUH
Sens —Sensible capacity x 1000 BTUH
Power—KW input

NOTES: ① When the entering air dry bulb is other than 80°F [27°C], adjust the sensible capacity from the table by adding [1.10 x CFM x (1 – DR) x (dbE – 80)].

[ ] Designates Metric Conversions

COOLING PERFORMANCE DATA—(-)GEDZR120A

ENTERING INDOOR AIR @ 80°F [26.7°C] dbE ①																		
wbE			71°F [21.7°C]			67°F [19.4°C]			63°F [17.2°C]			61°F [16.1°C]			59°F [15.0°C]		
CFM [L/s]			4800 [2265]	3750 [1770]	3200 [1510]	4800 [2265]	3750 [1770]	3200 [1510]	4800 [2265]	3750 [1770]	3200 [1510]	4800 [2265]	3750 [1770]	3200 [1510]	4800 [2265]	3750 [1770]	3200 [1510]
DR ①			0.09	0.03	0	0.09	0.03	0	0.09	0.03	0	0.09	0.03	0	0.09	0.03	0
OUTDOOR DRY BULB TEMPERATURE °F [°C]	75 [23.9]	Total BTUH [kW]	155.3 [45.5]	147.8 [43.3]	143.8 [42.2]	147.8 [43.3]	140.7 [41.2]	136.9 [40.1]	142.8 [41.8]	135.8 [39.8]	132.2 [38.7]	141.5 [41.5]	134.7 [39.5]	131.1 [38.4]	141.4 [41.4]	134.5 [39.4]	130.9 [38.4]
		Sens BTUH [kW]	97.3 [28.5]	86.1 [25.2]	80.2 [23.5]	115.8 [33.9]	102.4 [30.0]	95.4 [28.0]	132.9 [38.9]	117.5 [34.4]	109.5 [32.1]	140.6 [41.2]	124.3 [36.4]	115.8 [33.9]	141.4 [41.4]	130.4 [38.2]	121.4 [35.6]
		Power	7.5	7.3	7.2	7.4	7.2	7.1	7.3	7.1	7	7.2	7.1	7	7.2	7	6.9
	80 [26.7]	Total BTUH [kW]	150.6 [44.1]	143.4 [42.0]	139.5 [40.9]	143.2 [42.0]	136.2 [39.9]	132.6 [38.9]	138.1 [40.5]	131.4 [38.5]	127.9 [37.5]	136.9 [40.1]	130.2 [38.2]	126.8 [37.1]	136.7 [40.1]	130.1 [38.1]	126.6 [37.1]
		Sens BTUH [kW]	94.9 [27.8]	84 [24.6]	78.2 [22.9]	113.5 [33.2]	100.3 [29.4]	93.5 [27.4]	130.5 [38.2]	115.4 [33.8]	107.5 [31.5]	136.9 [40.1]	122.2 [35.8]	113.8 [33.4]	136.7 [40.1]	128.3 [37.6]	119.5 [35.0]
		Power	7.9	7.7	7.6	7.8	7.6	7.5	7.7	7.5	7.4	7.7	7.5	7.4	7.6	7.4	7.3
	85 [29.4]	Total BTUH [kW]	146 [42.8]	138.9 [40.7]	135.2 [39.6]	138.5 [40.6]	131.8 [38.6]	128.3 [37.6]	133.5 [39.1]	127 [37.2]	123.6 [36.2]	132.2 [38.7]	125.8 [36.9]	122.5 [35.9]	132.1 [38.7]	125.7 [36.8]	122.3 [35.9]
		Sens BTUH [kW]	92.5 [27.1]	81.8 [24.0]	76.2 [22.3]	111 [32.5]	98.2 [28.8]	91.5 [26.8]	128.1 [37.5]	113.3 [33.2]	105.5 [30.9]	132.2 [38.7]	120.1 [35.2]	111.9 [32.8]	132.1 [38.7]	125.7 [36.8]	117.5 [34.4]
		Power	8.3	8.1	8	8.2	8	7.9	8.2	8	7.9	8.1	7.9	7.8	8.1	7.9	7.8
	90 [32.2]	Total BTUH [kW]	141.4 [41.4]	134.5 [39.4]	131 [38.4]	133.9 [39.2]	127.4 [37.3]	124 [36.3]	128.8 [37.8]	122.6 [35.9]	119.3 [35.0]	127.6 [37.4]	121.4 [35.6]	118.2 [34.6]	127.5 [37.4]	121.3 [35.5]	118.1 [34.6]
		Sens BTUH [kW]	90.1 [26.4]	79.7 [23.3]	74.2 [21.7]	108.6 [31.8]	96 [28.1]	89.5 [26.2]	125.6 [36.8]	111.1 [32.6]	103.5 [30.3]	127.6 [37.4]	117.9 [34.5]	109.8 [32.2]	127.5 [37.4]	121.3 [35.5]	115.5 [33.8]
		Power	8.8	8.6	8.5	8.7	8.5	8.4	8.6	8.4	8.3	8.6	8.4	8.3	8.5	8.3	8.2
	95 [35]	Total BTUH [kW]	136.8 [40.1]	130.2 [38.1]	126.7 [37.1]	129.3 [37.9]	123 [36.1]	119.7 [35.1]	124.2 [36.4]	118.2 [34.6]	115.1 [33.7]	123 [36.0]	117 [34.3]	113.9 [33.4]	122.9 [36.0]	116.9 [34.3]	113.8 [33.3]
		Sens BTUH [kW]	87.6 [25.7]	77.5 [22.7]	72.2 [21.1]	106.1 [31.1]	93.8 [27.5]	87.4 [25.6]	123.1 [36.1]	108.9 [31.9]	101.5 [29.7]	123 [36.0]	115.7 [33.9]	107.8 [31.6]	122.9 [36.0]	116.9 [34.3]	113.4 [33.2]
		Power	9.3	9.1	9	9.2	9	8.9	9.1	8.9	8.8	9.1	8.9	8.8	9.1	8.8	8.7
	100 [37.8]	Total BTUH [kW]	132.2 [38.7]	125.8 [36.9]	122.4 [35.9]	124.7 [36.5]	118.7 [34.8]	115.5 [33.8]	119.6 [35.1]	113.8 [33.4]	110.8 [32.5]	118.4 [34.7]	112.7 [33.0]	109.7 [32.1]	118.3 [34.7]	112.5 [33.0]	109.5 [32.1]
		Sens BTUH [kW]	85.1 [24.9]	75.2 [22.0]	70.1 [20.5]	103.6 [30.3]	91.6 [26.8]	85.3 [25.0]	119.6 [35.1]	106.7 [31.3]	99.4 [29.1]	118.4 [34.7]	112.7 [33.0]	105.7 [31.0]	118.3 [34.7]	112.5 [33.0]	109.5 [32.1]
		Power	9.9	9.6	9.5	9.8	9.5	9.4	9.7	9.5	9.3	9.6	9.4	9.3	9.6	9.4	9.2
	105 [40.6]	Total BTUH [kW]	127.6 [37.4]	121.4 [35.6]	118.2 [34.6]	120.1 [35.2]	114.3 [33.5]	111.2 [32.6]	115.1 [33.7]	109.5 [32.1]	106.6 [31.2]	113.8 [33.4]	108.3 [31.7]	105.4 [30.9]	113.7 [33.3]	108.2 [31.7]	105.3 [30.9]
		Sens BTUH [kW]	82.5 [24.2]	73 [21.4]	68 [19.9]	101 [29.6]	89.3 [26.2]	83.2 [24.4]	115.1 [33.7]	104.4 [30.6]	97.3 [28.5]	113.8 [33.4]	108.3 [31.7]	103.6 [30.4]	113.7 [33.3]	108.2 [31.7]	105.3 [30.9]
		Power	10.5	10.2	10.1	10.4	10.1	10	10.3	10	9.9	10.2	10	9.8	10.2	9.9	9.8
	110 [43.3]	Total BTUH [kW]	123 [36.1]	117.1 [34.3]	114 [33.4]	115.5 [33.9]	109.9 [32.2]	107 [31.4]	110.5 [32.4]	105.1 [30.8]	102.3 [30.0]	109.3 [32.0]	104 [30.5]	101.2 [29.7]	109.1 [32.0]	103.8 [30.4]	101.1 [29.6]
		Sens BTUH [kW]	79.9 [23.4]	70.6 [20.7]	65.8 [19.3]	98.4 [28.8]	87 [25.5]	81.1 [23.8]	110.5 [32.4]	102.1 [29.9]	95.1 [27.9]	109.3 [32.0]	104 [30.5]	101.2 [29.7]	109.1 [32.0]	103.8 [30.4]	101.1 [29.6]
		Power	11.1	10.8	10.7	11	10.7	10.6	10.9	10.6	10.5	10.8	10.6	10.4	10.8	10.5	10.4
	115 [46.1]	Total BTUH [kW]	118.5 [34.7]	112.7 [33.0]	109.7 [32.2]	111 [32.5]	105.6 [31.0]	102.8 [30.1]	105.9 [31.0]	100.8 [29.5]	98.1 [28.8]	104.7 [30.7]	99.6 [29.2]	97 [28.4]	104.6 [30.6]	99.5 [29.2]	96.8 [28.4]
		Sens BTUH [kW]	77.2 [22.6]	68.3 [20.0]	63.6 [18.6]	95.7 [28.1]	84.7 [24.8]	78.9 [23.1]	105.9 [31.0]	99.8 [29.2]	92.9 [27.2]	104.7 [30.7]	99.6 [29.2]	97 [28.4]	104.6 [30.6]	99.5 [29.2]	96.8 [28.4]
		Power	11.7	11.4	11.3	11.6	11.3	11.2	11.5	11.2	11.1	11.5	11.2	11.1	11.4	11.2	11
	120 [48.9]	Total BTUH [kW]	113.9 [33.4]	108.4 [31.8]	105.5 [30.9]	106.5 [31.2]	101.3 [29.7]	98.6 [28.9]	101.4 [29.7]	96.5 [28.3]	93.9 [27.5]	100.2 [29.4]	95.3 [27.9]	92.8 [27.2]	100 [29.3]	95.2 [27.9]	92.6 [27.1]
		Sens BTUH [kW]	74.5 [21.8]	65.9 [19.3]	61.4 [18.0]	93 [27.3]	82.3 [24.1]	76.7 [22.5]	101.4 [29.7]	96.5 [28.3]	90.7 [26.6]	100.2 [29.4]	95.3 [27.9]	92.8 [27.2]	100 [29.3]	95.2 [27.9]	92.6 [27.1]
		Power	12.4	12.1	11.9	12.3	12	11.8	12.2	11.9	11.7	12.1	11.9	11.7	12.1	11.8	11.7
	125 [51.7]	Total BTUH [kW]	109.4 [32.1]	104.1 [30.5]	101.3 [29.7]	101.9 [29.9]	97 [28.4]	94.4 [27.7]	96.9 [28.4]	92.2 [27.0]	89.7 [26.3]	95.6 [28.0]	91 [26.7]	88.6 [26.0]	95.5 [28.0]	90.9 [26.6]	88.5 [25.9]
		Sens BTUH [kW]	71.8 [21.0]	63.5 [18.6]	59.2 [17.3]	90.3 [26.5]	79.9 [23.4]	74.4 [21.8]	96.9 [28.4]	92.2 [27.0]	88.5 [25.9]	95.6 [28.0]	91 [26.7]	88.6 [26.0]	95.5 [28.0]	90.9 [26.6]	88.5 [25.9]
		Power	13.1	12.8	12.6	13	12.7	12.5	12.9	12.6	12.4	12.9	12.5	12.4	12.8	12.5	12.3

DR —Depression ratio
dbE —Entering air dry bulb
wbE—Entering air wet bulb

Total —Total capacity x 1000 BTUH
Sens —Sensible capacity x 1000 BTUH
Power—KW input

NOTES: ① When the entering air dry bulb is other than 80°F [27°C], adjust the sensible capacity from the table by adding [1.10 x CFM x (1 – DR) x (dbE – 80)].

[ ] Designates Metric Conversions

COOLING PERFORMANCE DATA—(-)GEDZS090A

ENTERING INDOOR AIR @ 80°F [26.7°C] dbE ①																		
wbE			71°F [21.7°C]			67°F [19.4°C]			63°F [17.2°C]			61°F [16.1°C]			59°F [15.0°C]		
CFM [L/s]			3600 [1699]	2775 [1310]	2400 [1133]	3600 [1699]	2775 [1310]	2400 [1133]	3600 [1699]	2775 [1310]	2400 [1133]	3600 [1699]	2775 [1310]	2400 [1133]	3600 [1699]	2775 [1310]	2400 [1133]
DR ①			0.17	0.13	0.11	0.17	0.13	0.11	0.17	0.13	0.11	0.17	0.13	0.11	0.17	0.13	0.11
OUTDOOR DRY BULB TEMPERATURE °F [°C]	75 [23.9]	Total BTUH [kW]	119.6 [35.0]	113.5 [33.2]	110.7 [32.4]	112.7 [33.0]	107 [31.3]	104.3 [30.6]	107.8 [31.6]	102.3 [30.0]	99.8 [29.2]	106.4 [31.2]	100.9 [29.6]	98.4 [28.8]	105.8 [31.0]	100.4 [29.4]	97.9 [28.7]
		Sens BTUH [kW]	70.3 [20.6]	61.8 [18.1]	57.9 [17.0]	83.3 [24.4]	73.2 [21.4]	68.5 [20.1]	96 [28.1]	84.3 [24.7]	79 [23.2]	102.2 [29.9]	89.7 [26.3]	84.1 [24.6]	105.8 [31.0]	94.9 [27.8]	88.9 [26.1]
		Power	5.2	5.1	5	5.1	5	4.9	5.1	4.9	4.9	5	4.9	4.9	5	4.9	4.8
	80 [26.7]	Total BTUH [kW]	116.1 [34.0]	110.1 [32.3]	107.4 [31.5]	109.2 [32.0]	103.6 [30.4]	101.1 [29.6]	104.3 [30.6]	99 [29.0]	96.5 [28.3]	102.9 [30.1]	97.6 [28.6]	95.2 [27.9]	102.3 [30.0]	97.1 [28.4]	94.7 [27.7]
		Sens BTUH [kW]	68.4 [20.1]	60.1 [17.6]	56.3 [16.5]	81.4 [23.9]	71.5 [20.9]	67 [19.6]	94.1 [27.6]	82.7 [24.2]	77.4 [22.7]	100.3 [29.4]	88.1 [25.8]	82.5 [24.2]	102.3 [30.0]	93.2 [27.3]	87.4 [25.6]
		Power	5.6	5.4	5.4	5.5	5.4	5.3	5.5	5.3	5.3	5.4	5.3	5.2	5.4	5.3	5.2
	85 [29.4]	Total BTUH [kW]	112.6 [33.0]	106.8 [31.3]	104.2 [30.5]	105.7 [31.0]	100.3 [29.4]	97.8 [28.7]	100.8 [29.5]	95.6 [28.0]	93.3 [27.3]	99.3 [29.1]	94.2 [27.6]	91.9 [26.9]	98.8 [28.9]	93.7 [27.5]	91.4 [26.8]
		Sens BTUH [kW]	66.6 [19.5]	58.5 [17.1]	54.8 [16.0]	79.5 [23.3]	69.8 [20.5]	65.4 [19.2]	92.3 [27.0]	81 [23.7]	75.9 [22.2]	98.4 [28.8]	86.4 [25.3]	81 [23.7]	98.8 [28.9]	91.6 [26.8]	85.8 [25.1]
		Power	6	5.9	5.8	6	5.8	5.8	5.9	5.8	5.7	5.9	5.7	5.7	5.9	5.7	5.6
	90 [32.2]	Total BTUH [kW]	109 [31.9]	103.4 [30.3]	100.9 [29.6]	102.1 [29.9]	96.9 [28.4]	94.5 [27.7]	97.2 [28.5]	92.2 [27.0]	90 [26.4]	95.8 [28.1]	90.9 [26.6]	88.6 [26.0]	95.2 [27.9]	90.3 [26.5]	88.1 [25.8]
		Sens BTUH [kW]	64.7 [19.0]	56.8 [16.7]	53.2 [15.6]	77.7 [22.8]	68.2 [20.0]	63.9 [18.7]	90.4 [26.5]	79.4 [23.3]	74.4 [21.8]	95.8 [28.1]	84.8 [24.8]	79.4 [23.3]	95.2 [27.9]	90 [26.4]	84.3 [24.7]
		Power	6.6	6.4	6.3	6.5	6.4	6.3	6.5	6.3	6.2	6.4	6.3	6.2	6.4	6.2	6.2
	95 [35]	Total BTUH [kW]	105.4 [30.9]	100 [29.3]	97.5 [28.6]	98.5 [28.9]	93.5 [27.4]	91.2 [26.7]	93.6 [27.4]	88.8 [26.0]	86.6 [25.4]	92.2 [27.0]	87.4 [25.6]	85.3 [25.0]	91.6 [26.8]	86.9 [25.5]	84.8 [24.8]
		Sens BTUH [kW]	62.9 [18.4]	55.2 [16.2]	51.7 [15.2]	75.8 [22.2]	66.6 [19.5]	62.4 [18.3]	88.6 [26.0]	77.8 [22.8]	72.9 [21.4]	92.2 [27.0]	83.2 [24.4]	77.9 [22.8]	91.6 [26.8]	86.9 [25.5]	82.8 [24.3]
		Power	7.2	7	6.9	7.2	7	6.9	7.1	6.9	6.8	7.1	6.9	6.8	7	6.9	6.8
	100 [37.8]	Total BTUH [kW]	101.7 [29.8]	96.5 [28.3]	94.2 [27.6]	94.9 [27.8]	90 [26.4]	87.8 [25.7]	90 [26.4]	85.4 [25.0]	83.3 [24.4]	88.5 [25.9]	84 [24.6]	81.9 [24.0]	88 [25.8]	83.4 [24.5]	81.4 [23.9]
		Sens BTUH [kW]	61 [17.9]	53.6 [15.7]	50.2 [14.7]	74 [21.7]	65 [19.0]	60.9 [17.8]	86.7 [25.4]	76.2 [22.3]	71.4 [20.9]	88.5 [25.9]	81.6 [23.9]	76.4 [22.4]	88 [25.8]	83.4 [24.5]	81.3 [23.8]
		Power	7.9	7.7	7.6	7.9	7.7	7.6	7.8	7.6	7.5	7.8	7.6	7.5	7.7	7.5	7.4
	105 [40.6]	Total BTUH [kW]	98.1 [28.7]	93 [27.3]	90.7 [26.6]	91.2 [26.7]	86.5 [25.4]	84.4 [24.7]	86.3 [25.3]	81.9 [24.0]	79.8 [23.4]	84.8 [24.9]	80.5 [23.6]	78.5 [23.0]	84.3 [24.7]	79.9 [23.4]	78 [22.9]
		Sens BTUH [kW]	59.3 [17.4]	52 [15.2]	48.8 [14.3]	72.2 [21.2]	63.4 [18.6]	59.4 [17.4]	84.9 [24.9]	74.6 [21.9]	69.9 [20.5]	84.8 [24.9]	80 [23.4]	74.9 [22.0]	84.3 [24.7]	79.9 [23.4]	78 [22.9]
		Power	8.7	8.5	8.4	8.6	8.4	8.3	8.6	8.4	8.3	8.5	8.3	8.2	8.5	8.3	8.2
	110 [43.3]	Total BTUH [kW]	94.3 [27.6]	89.5 [26.2]	87.3 [25.6]	87.5 [25.6]	83 [24.3]	81 [23.7]	82.6 [24.2]	78.3 [23.0]	76.4 [22.4]	81.1 [23.8]	76.9 [22.5]	75.1 [22.0]	80.5 [23.6]	76.4 [22.4]	74.5 [21.8]
		Sens BTUH [kW]	57.5 [16.8]	50.5 [14.8]	47.3 [13.9]	70.4 [20.6]	61.9 [18.1]	57.9 [17.0]	82.6 [24.2]	73 [21.4]	68.4 [20.1]	81.1 [23.8]	76.9 [22.5]	73.5 [21.5]	80.5 [23.6]	76.4 [22.4]	74.5 [21.8]
		Power	9.5	9.3	9.2	9.5	9.2	9.1	9.4	9.2	9.1	9.4	9.2	9	9.4	9.1	9
	115 [46.1]	Total BTUH [kW]	90.6 [26.5]	85.9 [25.2]	83.8 [24.6]	83.7 [24.5]	79.4 [23.3]	77.5 [22.7]	78.8 [23.1]	74.8 [21.9]	72.9 [21.4]	77.3 [22.7]	73.4 [21.5]	71.6 [21.0]	76.8 [22.5]	72.8 [21.3]	71.1 [20.8]
		Sens BTUH [kW]	55.7 [16.3]	48.9 [14.3]	45.8 [13.4]	68.7 [20.1]	60.3 [17.7]	56.5 [16.6]	78.8 [23.1]	71.5 [20.9]	67 [19.6]	77.3 [22.7]	73.4 [21.5]	71.6 [21.0]	76.8 [22.5]	72.8 [21.3]	71.1 [20.8]
		Power	10.5	10.2	10.1	10.4	10.2	10	10.4	10.1	10	10.3	10.1	9.9	10.3	10	9.9
	120 [48.9]	Total BTUH [kW]	86.8 [25.4]	82.3 [24.1]	80.3 [23.5]	79.9 [23.4]	75.8 [22.2]	74 [21.7]	75 [22.0]	71.1 [20.8]	69.4 [20.3]	73.5 [21.6]	69.8 [20.4]	68.1 [19.9]	73 [21.4]	69.2 [20.3]	67.5 [19.8]
		Sens BTUH [kW]	54 [15.8]	47.4 [13.9]	44.4 [13.0]	66.9 [19.6]	58.8 [17.2]	55.1 [16.1]	75 [22.0]	70 [20.5]	65.5 [19.2]	73.5 [21.6]	69.8 [20.4]	68.1 [19.9]	73 [21.4]	69.2 [20.3]	67.5 [19.8]
		Power	11.5	11.2	11.1	11.4	11.1	11	11.4	11.1	11	11.3	11.1	10.9	11.3	11	10.9
	125 [51.7]	Total BTUH [kW]	82.9 [24.3]	78.7 [23.1]	76.8 [22.5]	76.1 [22.3]	72.2 [21.2]	70.4 [20.6]	71.2 [20.9]	67.5 [19.8]	65.8 [19.3]	69.7 [20.4]	66.1 [19.4]	64.5 [18.9]	69.1 [20.3]	65.6 [19.2]	64 [18.8]
		Sens BTUH [kW]	52.3 [15.3]	45.9 [13.4]	43 [12.6]	65.2 [19.1]	57.3 [16.8]	53.7 [15.7]	71.2 [20.9]	67.5 [19.8]	64.1 [18.8]	69.7 [20.4]	66.1 [19.4]	64.5 [18.9]	69.1 [20.3]	65.6 [19.2]	64 [18.8]
		Power	12.6	12.3	12.1	12.5	12.2	12.1	12.5	12.1	12	12.4	12.1	12	12.4	12.1	11.9

DR —Depression ratio
dbE —Entering air dry bulb
wbE—Entering air wet bulb

Total —Total capacity x 1000 BTUH
Sens —Sensible capacity x 1000 BTUH
Power—KW input

NOTES: ① When the entering air dry bulb is other than 80°F [27°C], adjust the sensible capacity from the table by adding [1.10 x CFM x (1 – DR) x (dbE – 80)].

[ ] Designates Metric Conversions

COOLING PERFORMANCE DATA—(-)GEDZS102A

ENTERING INDOOR AIR @ 80°F [26.7°C] dbE ①																		
wbE			71°F [21.7°C]			67°F [19.4°C]			63°F [17.2°C]			61°F [16.1°C]			59°F [15.0°C]		
CFM [L/s]			4100 [1935]	3200 [1510]	2700 [1274]	4100 [1935]	3200 [1510]	2700 [1274]	4100 [1935]	3200 [1510]	2700 [1274]	4100 [1935]	3200 [1510]	2700 [1274]	4100 [1935]	3200 [1510]	2700 [1274]
DR ①			0.11	0.05	0.01	0.11	0.05	0.01	0.11	0.05	0.01	0.11	0.05	0.01	0.11	0.05	0.01
OUTDOOR DRY BULB TEMPERATURE °F [°C]	75 [23.9]	Total BTUH [kW]	129.9 [38.1]	123.6 [36.2]	120.1 [35.2]	122.7 [36.0]	116.7 [34.2]	113.4 [33.2]	118.3 [34.7]	112.5 [33.0]	109.3 [32.0]	117.5 [34.4]	111.8 [32.8]	108.6 [31.8]	118 [34.6]	112.2 [32.9]	109 [32.0]
		Sens BTUH [kW]	81.3 [23.8]	71.9 [21.1]	66.6 [19.5]	96.4 [28.2]	85.2 [25.0]	79 [23.1]	110.1 [32.3]	97.3 [28.5]	90.2 [26.4]	116.1 [34.0]	102.6 [30.1]	95.2 [27.9]	118 [34.6]	107.3 [31.5]	99.5 [29.2]
		Power	6.2	6.1	6	6.1	6	5.9	6.1	5.9	5.8	6	5.9	5.8	6	5.9	5.8
	80 [26.7]	Total BTUH [kW]	125.7 [36.8]	119.5 [35.0]	116.1 [34.0]	118.5 [34.7]	112.7 [33.0]	109.5 [32.1]	114 [33.4]	108.5 [31.8]	105.4 [30.9]	113.3 [33.2]	107.8 [31.6]	104.7 [30.7]	113.7 [33.3]	108.2 [31.7]	105.1 [30.8]
		Sens BTUH [kW]	79.2 [23.2]	70 [20.5]	64.9 [19.0]	94.3 [27.6]	83.3 [24.4]	77.2 [22.6]	108 [31.6]	95.4 [28.0]	88.5 [25.9]	113.3 [33.2]	100.8 [29.5]	93.4 [27.4]	113.7 [33.3]	105.5 [30.9]	97.8 [28.7]
		Power	6.6	6.4	6.3	6.5	6.3	6.2	6.4	6.3	6.2	6.4	6.2	6.2	6.4	6.2	6.1
	85 [29.4]	Total BTUH [kW]	121.4 [35.6]	115.5 [33.8]	112.2 [32.9]	114.2 [33.5]	108.7 [31.8]	105.6 [30.9]	109.8 [32.2]	104.4 [30.6]	101.5 [29.7]	109 [31.9]	103.7 [30.4]	100.8 [29.5]	109.5 [32.1]	104.2 [30.5]	101.2 [29.7]
		Sens BTUH [kW]	77 [22.6]	68.1 [20.0]	63.1 [18.5]	92.1 [27.0]	81.4 [23.9]	75.5 [22.1]	105.8 [31.0]	93.5 [27.4]	86.7 [25.4]	109 [31.9]	98.9 [29.0]	91.7 [26.9]	109.5 [32.1]	103.6 [30.4]	96 [28.1]
		Power	6.9	6.8	6.7	6.9	6.7	6.6	6.8	6.6	6.6	6.8	6.6	6.5	6.7	6.6	6.5
	90 [32.2]	Total BTUH [kW]	117.1 [34.3]	111.4 [32.7]	108.3 [31.7]	110 [32.2]	104.6 [30.7]	101.6 [29.8]	105.5 [30.9]	100.4 [29.4]	97.5 [28.6]	104.8 [30.7]	99.7 [29.2]	96.8 [28.4]	105.2 [30.8]	100.1 [29.3]	97.3 [28.5]
		Sens BTUH [kW]	74.9 [21.9]	66.2 [19.4]	61.4 [18.0]	89.9 [26.4]	79.5 [23.3]	73.7 [21.6]	103.6 [30.4]	91.6 [26.8]	84.9 [24.9]	104.8 [30.7]	97 [28.4]	89.9 [26.3]	105.2 [30.8]	100.1 [29.3]	94.3 [27.6]
		Power	7.4	7.2	7.1	7.3	7.1	7	7.2	7.1	7	7.2	7	6.9	7.2	7	6.9
	95 [35]	Total BTUH [kW]	112.9 [33.1]	107.4 [31.5]	104.3 [30.6]	105.7 [31.0]	100.5 [29.5]	97.7 [28.6]	101.2 [29.7]	96.3 [28.2]	93.6 [27.4]	100.5 [29.4]	95.6 [28.0]	92.9 [27.2]	100.9 [29.6]	96 [28.1]	93.3 [27.3]
		Sens BTUH [kW]	72.6 [21.3]	64.2 [18.8]	59.5 [17.4]	87.7 [25.7]	77.5 [22.7]	71.9 [21.1]	101.2 [29.7]	89.7 [26.3]	83.1 [24.4]	100.5 [29.4]	95 [27.8]	88.1 [25.8]	100.9 [29.6]	96 [28.1]	92.4 [27.1]
		Power	7.8	7.6	7.5	7.7	7.6	7.4	7.7	7.5	7.4	7.6	7.5	7.4	7.6	7.4	7.3
	100 [37.8]	Total BTUH [kW]	108.6 [31.8]	103.3 [30.3]	100.4 [29.4]	101.4 [29.7]	96.5 [28.3]	93.7 [27.5]	97 [28.4]	92.2 [27.0]	89.6 [26.3]	96.2 [28.2]	91.5 [26.8]	88.9 [26.1]	96.7 [28.3]	92 [26.9]	89.3 [26.2]
		Sens BTUH [kW]	70.4 [20.6]	62.2 [18.2]	57.7 [16.9]	85.5 [25.0]	75.5 [22.1]	70 [20.5]	97 [28.4]	87.7 [25.7]	81.3 [23.8]	96.2 [28.2]	91.5 [26.8]	86.2 [25.3]	96.7 [28.3]	92 [26.9]	89.3 [26.2]
		Power	8.3	8.1	8	8.2	8	7.9	8.2	8	7.8	8.1	7.9	7.8	8.1	7.9	7.8
	105 [40.6]	Total BTUH [kW]	104.3 [30.6]	99.2 [29.1]	96.4 [28.2]	97.1 [28.4]	92.4 [27.1]	89.7 [26.3]	92.7 [27.2]	88.1 [25.8]	85.6 [25.1]	91.9 [26.9]	87.4 [25.6]	84.9 [24.9]	92.4 [27.1]	87.9 [25.7]	85.4 [25.0]
		Sens BTUH [kW]	68.1 [20.0]	60.2 [17.6]	55.8 [16.4]	83.2 [24.4]	73.5 [21.5]	68.1 [20.0]	92.7 [27.2]	85.6 [25.1]	79.4 [23.3]	91.9 [26.9]	87.4 [25.6]	84.3 [24.7]	92.4 [27.1]	87.9 [25.7]	85.4 [25.0]
		Power	8.8	8.6	8.5	8.7	8.5	8.4	8.7	8.5	8.3	8.6	8.4	8.3	8.6	8.4	8.3
	110 [43.3]	Total BTUH [kW]	99.9 [29.3]	95.1 [27.9]	92.4 [27.1]	92.8 [27.2]	88.2 [25.9]	85.7 [25.1]	88.3 [25.9]	84 [24.6]	81.6 [23.9]	87.6 [25.7]	83.3 [24.4]	80.9 [23.7]	88 [25.8]	83.7 [24.5]	81.4 [23.8]
		Sens BTUH [kW]	65.8 [19.3]	58.1 [17.0]	53.9 [15.8]	80.8 [23.7]	71.4 [20.9]	66.2 [19.4]	88.3 [25.9]	83.6 [24.5]	77.5 [22.7]	87.6 [25.7]	83.3 [24.4]	80.9 [23.7]	88 [25.8]	83.7 [24.5]	81.4 [23.8]
		Power	9.3	9.1	9	9.3	9	8.9	9.2	9	8.9	9.2	9	8.8	9.1	8.9	8.8
	115 [46.1]	Total BTUH [kW]	95.6 [28.0]	91 [26.7]	88.4 [25.9]	88.4 [25.9]	84.1 [24.7]	81.7 [24.0]	84 [24.6]	79.9 [23.4]	77.6 [22.8]	83.2 [24.4]	79.2 [23.2]	76.9 [22.5]	83.7 [24.5]	79.6 [23.3]	77.4 [22.7]
		Sens BTUH [kW]	63.4 [18.6]	56 [16.4]	51.9 [15.2]	78.4 [23.0]	69.3 [20.3]	64.3 [18.8]	84 [24.6]	79.9 [23.4]	75.5 [22.1]	83.2 [24.4]	79.2 [23.2]	76.9 [22.5]	83.7 [24.5]	79.6 [23.3]	77.4 [22.7]
		Power	9.9	9.7	9.5	9.8	9.6	9.5	9.8	9.5	9.4	9.7	9.5	9.4	9.7	9.5	9.4
	120 [48.9]	Total BTUH [kW]	91.3 [26.7]	86.8 [25.4]	84.4 [24.7]	84.1 [24.6]	80 [23.4]	77.7 [22.8]	79.6 [23.3]	75.8 [22.2]	73.6 [21.6]	78.9 [23.1]	75 [22.0]	72.9 [21.4]	79.3 [23.3]	75.5 [22.1]	73.3 [21.5]
		Sens BTUH [kW]	61 [17.9]	53.9 [15.8]	50 [14.6]	76 [22.3]	67.2 [19.7]	62.3 [18.3]	79.6 [23.3]	75.8 [22.2]	73.5 [21.6]	78.9 [23.1]	75 [22.0]	72.9 [21.4]	79.3 [23.3]	75.5 [22.1]	73.3 [21.5]
		Power	10.5	10.3	10.1	10.5	10.2	10.1	10.4	10.1	10	10.4	10.1	10	10.3	10.1	9.9
	125 [51.7]	Total BTUH [kW]	86.9 [25.5]	82.7 [24.2]	80.3 [23.5]	79.7 [23.4]	75.8 [22.2]	73.7 [21.6]	75.3 [22.1]	71.6 [21.0]	69.6 [20.4]	74.5 [21.8]	70.9 [20.8]	68.9 [20.2]	75 [22.0]	71.3 [20.9]	69.3 [20.3]
		Sens BTUH [kW]	58.5 [17.1]	51.7 [15.2]	48 [14.1]	73.6 [21.6]	65 [19.1]	60.3 [17.7]	75.3 [22.1]	71.6 [21.0]	69.6 [20.4]	74.5 [21.8]	70.9 [20.8]	68.9 [20.2]	75 [22.0]	71.3 [20.9]	69.3 [20.3]
		Power	11.2	10.9	10.7	11.1	10.8	10.7	11	10.8	10.6	11	10.7	10.6	11	10.7	10.5

DR —Depression ratio
dbE —Entering air dry bulb
wbE—Entering air wet bulb

Total —Total capacity x 1000 BTUH
Sens —Sensible capacity x 1000 BTUH
Power —KW input

NOTES: ① When the entering air dry bulb is other than 80°F [27°C], adjust the sensible capacity from the table by adding [1.10 x CFM x (1 – DR) x (dbE – 80)].

[ ] Designates Metric Conversions

COOLING PERFORMANCE DATA—(-)GEDZS120A

ENTERING INDOOR AIR @ 80°F [26.7°C] dbE ①																		
wbE			71°F [21.7°C]			67°F [19.4°C]			63°F [17.2°C]			61°F [16.1°C]			59°F [15.0°C]		
CFM [L/s]			4800 [2265]	3750 [1770]	3200 [1510]	4800 [2265]	3750 [1770]	3200 [1510]	4800 [2265]	3750 [1770]	3200 [1510]	4800 [2265]	3750 [1770]	3200 [1510]	4800 [2265]	3750 [1770]	3200 [1510]
DR ①			0.09	0.03	0	0.09	0.03	0	0.09	0.03	0	0.09	0.03	0	0.09	0.03	0
OUTDOOR DRY BULB TEMPERATURE °F [°C]	75 [23.9]	Total BTUH [kW]	155.3 [45.5]	147.8 [43.3]	143.8 [42.2]	147.8 [43.3]	140.7 [41.2]	136.9 [40.1]	142.8 [41.8]	135.8 [39.8]	132.2 [38.7]	141.5 [41.5]	134.7 [39.5]	131.1 [38.4]	141.4 [41.4]	134.5 [39.4]	130.9 [38.4]
		Sens BTUH [kW]	97.3 [28.5]	86.1 [25.2]	80.2 [23.5]	115.8 [33.9]	102.4 [30.0]	95.4 [28.0]	132.9 [38.9]	117.5 [34.4]	109.5 [32.1]	140.6 [41.2]	124.3 [36.4]	115.8 [33.9]	141.4 [41.4]	130.4 [38.2]	121.4 [35.6]
		Power	7.5	7.3	7.2	7.4	7.2	7.1	7.3	7.1	7	7.2	7.1	7	7.2	7	6.9
	80 [26.7]	Total BTUH [kW]	150.6 [44.1]	143.4 [42.0]	139.5 [40.9]	143.2 [42.0]	136.2 [39.9]	132.6 [38.9]	138.1 [40.5]	131.4 [38.5]	127.9 [37.5]	136.9 [40.1]	130.2 [38.2]	126.8 [37.1]	136.7 [40.1]	130.1 [38.1]	126.6 [37.1]
		Sens BTUH [kW]	94.9 [27.8]	84 [24.6]	78.2 [22.9]	113.5 [33.2]	100.3 [29.4]	93.5 [27.4]	130.5 [38.2]	115.4 [33.8]	107.5 [31.5]	136.9 [40.1]	122.2 [35.8]	113.8 [33.4]	136.7 [40.1]	128.3 [37.6]	119.5 [35.0]
		Power	7.9	7.7	7.6	7.8	7.6	7.5	7.7	7.5	7.4	7.7	7.5	7.4	7.6	7.4	7.3
	85 [29.4]	Total BTUH [kW]	146 [42.8]	138.9 [40.7]	135.2 [39.6]	138.5 [40.6]	131.8 [38.6]	128.3 [37.6]	133.5 [39.1]	127 [37.2]	123.6 [36.2]	132.2 [38.7]	125.8 [36.9]	122.5 [35.9]	132.1 [38.7]	125.7 [36.8]	122.3 [35.9]
		Sens BTUH [kW]	92.5 [27.1]	81.8 [24.0]	76.2 [22.3]	111 [32.5]	98.2 [28.8]	91.5 [26.8]	128.1 [37.5]	113.3 [33.2]	105.5 [30.9]	132.2 [38.7]	120.1 [35.2]	111.9 [32.8]	132.1 [38.7]	125.7 [36.8]	117.5 [34.4]
		Power	8.3	8.1	8	8.2	8	7.9	8.2	8	7.9	8.1	7.9	7.8	8.1	7.9	7.8
	90 [32.2]	Total BTUH [kW]	141.4 [41.4]	134.5 [39.4]	131 [38.4]	133.9 [39.2]	127.4 [37.3]	124 [36.3]	128.8 [37.8]	122.6 [35.9]	119.3 [35.0]	127.6 [37.4]	121.4 [35.6]	118.2 [34.6]	127.5 [37.4]	121.3 [35.5]	118.1 [34.6]
		Sens BTUH [kW]	90.1 [26.4]	79.7 [23.3]	74.2 [21.7]	108.6 [31.8]	96 [28.1]	89.5 [26.2]	125.6 [36.8]	111.1 [32.6]	103.5 [30.3]	127.6 [37.4]	117.9 [34.5]	109.8 [32.2]	127.5 [37.4]	121.3 [35.5]	115.5 [33.8]
		Power	8.8	8.6	8.5	8.7	8.5	8.4	8.6	8.4	8.3	8.6	8.4	8.3	8.5	8.3	8.2
	95 [35]	Total BTUH [kW]	136.8 [40.1]	130.2 [38.1]	126.7 [37.1]	129.3 [37.9]	123 [36.1]	119.7 [35.1]	124.2 [36.4]	118.2 [34.6]	115.1 [33.7]	123 [36.0]	117 [34.3]	113.9 [33.4]	122.9 [36.0]	116.9 [34.3]	113.8 [33.3]
		Sens BTUH [kW]	87.6 [25.7]	77.5 [22.7]	72.2 [21.1]	106.1 [31.1]	93.8 [27.5]	87.4 [25.6]	123.1 [36.1]	108.9 [31.9]	101.5 [29.7]	123 [36.0]	115.7 [33.9]	107.8 [31.6]	122.9 [36.0]	116.9 [34.3]	113.4 [33.2]
		Power	9.3	9.1	9	9.2	9	8.9	9.1	8.9	8.8	9.1	8.9	8.8	9.1	8.8	8.7
	100 [37.8]	Total BTUH [kW]	132.2 [38.7]	125.8 [36.9]	122.4 [35.9]	124.7 [36.5]	118.7 [34.8]	115.5 [33.8]	119.6 [35.1]	113.8 [33.4]	110.8 [32.5]	118.4 [34.7]	112.7 [33.0]	109.7 [32.1]	118.3 [34.7]	112.5 [33.0]	109.5 [32.1]
		Sens BTUH [kW]	85.1 [24.9]	75.2 [22.0]	70.1 [20.5]	103.6 [30.3]	91.6 [26.8]	85.3 [25.0]	119.6 [35.1]	106.7 [31.3]	99.4 [29.1]	118.4 [34.7]	112.7 [33.0]	105.7 [31.0]	118.3 [34.7]	112.5 [33.0]	109.5 [32.1]
		Power	9.9	9.6	9.5	9.8	9.5	9.4	9.7	9.5	9.3	9.6	9.4	9.3	9.6	9.4	9.2
	105 [40.6]	Total BTUH [kW]	127.6 [37.4]	121.4 [35.6]	118.2 [34.6]	120.1 [35.2]	114.3 [33.5]	111.2 [32.6]	115.1 [33.7]	109.5 [32.1]	106.6 [31.2]	113.8 [33.4]	108.3 [31.7]	105.4 [30.9]	113.7 [33.3]	108.2 [31.7]	105.3 [30.9]
		Sens BTUH [kW]	82.5 [24.2]	73 [21.4]	68 [19.9]	101 [29.6]	89.3 [26.2]	83.2 [24.4]	115.1 [33.7]	104.4 [30.6]	97.3 [28.5]	113.8 [33.4]	108.3 [31.7]	103.6 [30.4]	113.7 [33.3]	108.2 [31.7]	105.3 [30.9]
		Power	10.5	10.2	10.1	10.4	10.1	10	10.3	10	9.9	10.2	10	9.8	10.2	9.9	9.8
	110 [43.3]	Total BTUH [kW]	123 [36.1]	117.1 [34.3]	114 [33.4]	115.5 [33.9]	109.9 [32.2]	107 [31.4]	110.5 [32.4]	105.1 [30.8]	102.3 [30.0]	109.3 [32.0]	104 [30.5]	101.2 [29.7]	109.1 [32.0]	103.8 [30.4]	101.1 [29.6]
		Sens BTUH [kW]	79.9 [23.4]	70.6 [20.7]	65.8 [19.3]	98.4 [28.8]	87 [25.5]	81.1 [23.8]	110.5 [32.4]	102.1 [29.9]	95.1 [27.9]	109.3 [32.0]	104 [30.5]	101.2 [29.7]	109.1 [32.0]	103.8 [30.4]	101.1 [29.6]
		Power	11.1	10.8	10.7	11	10.7	10.6	10.9	10.6	10.5	10.8	10.6	10.4	10.8	10.5	10.4
	115 [46.1]	Total BTUH [kW]	118.5 [34.7]	112.7 [33.0]	109.7 [32.2]	111 [32.5]	105.6 [31.0]	102.8 [30.1]	105.9 [31.0]	100.8 [29.5]	98.1 [28.8]	104.7 [30.7]	99.6 [29.2]	97 [28.4]	104.6 [30.6]	99.5 [29.2]	96.8 [28.4]
		Sens BTUH [kW]	77.2 [22.6]	68.3 [20.0]	63.6 [18.6]	95.7 [28.1]	84.7 [24.8]	78.9 [23.1]	105.9 [31.0]	99.8 [29.2]	92.9 [27.2]	104.7 [30.7]	99.6 [29.2]	97 [28.4]	104.6 [30.6]	99.5 [29.2]	96.8 [28.4]
		Power	11.7	11.4	11.3	11.6	11.3	11.2	11.5	11.2	11.1	11.5	11.2	11.1	11.4	11.2	11
	120 [48.9]	Total BTUH [kW]	113.9 [33.4]	108.4 [31.8]	105.5 [30.9]	106.5 [31.2]	101.3 [29.7]	98.6 [28.9]	101.4 [29.7]	96.5 [28.3]	93.9 [27.5]	100.2 [29.4]	95.3 [27.9]	92.8 [27.2]	100 [29.3]	95.2 [27.9]	92.6 [27.1]
		Sens BTUH [kW]	74.5 [21.8]	65.9 [19.3]	61.4 [18.0]	93 [27.3]	82.3 [24.1]	76.7 [22.5]	101.4 [29.7]	96.5 [28.3]	90.7 [26.6]	100.2 [29.4]	95.3 [27.9]	92.8 [27.2]	100 [29.3]	95.2 [27.9]	92.6 [27.1]
		Power	12.4	12.1	11.9	12.3	12	11.8	12.2	11.9	11.7	12.1	11.9	11.7	12.1	11.8	11.7
	125 [51.7]	Total BTUH [kW]	109.4 [32.1]	104.1 [30.5]	101.3 [29.7]	101.9 [29.9]	97 [28.4]	94.4 [27.7]	96.9 [28.4]	92.2 [27.0]	89.7 [26.3]	95.6 [28.0]	91 [26.7]	88.6 [26.0]	95.5 [28.0]	90.9 [26.6]	88.5 [25.9]
		Sens BTUH [kW]	71.8 [21.0]	63.5 [18.6]	59.2 [17.3]	90.3 [26.5]	79.9 [23.4]	74.4 [21.8]	96.9 [28.4]	92.2 [27.0]	88.5 [25.9]	95.6 [28.0]	91 [26.7]	88.6 [26.0]	95.5 [28.0]	90.9 [26.6]	88.5 [25.9]
		Power	13.1	12.8	12.6	13	12.7	12.5	12.9	12.6	12.4	12.9	12.5	12.4	12.8	12.5	12.3

DR —Depression ratio
dbE —Entering air dry bulb
wbE—Entering air wet bulb

Total —Total capacity x 1000 BTUH
Sens —Sensible capacity x 1000 BTUH
Power —KW input

NOTES: ① When the entering air dry bulb is other than 80°F [27°C], adjust the sensible capacity from the table by adding [1.10 x CFM x (1 – DR) x (dbE – 80)].

[ ] Designates Metric Conversions

COOLING PERFORMANCE DATA—(-)GEDZS150A

ENTERING INDOOR AIR @ 80°F [26.7°C] dbE ①											
wbE			71°F [21.7°C]			67°F [19.4°C]			63°F [17.2°C]		
CFM [L/s]			4500 [2124]	3750 [1770]	3000 [1416]	4500 [2124]	3750 [1770]	3000 [1416]	4500 [2124]	3750 [1770]	3000 [1416]
DR ①			0	0.01	0.09	0	0.01	0.09	0	0.01	0.09
OUTDOOR DRY BULB TEMPERATURE °F [°C]	75 [23.9]	Total BTUH [kW]	179.6 [52.6]	173.3 [50.8]	167.0 [48.9]	172.2 [50.5]	166.2 [48.7]	160.2 [46.9]	167.3 [49.0]	161.4 [47.3]	155.5 [45.6]
		Sens BTUH [kW]	113.4 [33.2]	97.4 [28.5]	82.6 [24.2]	131.0 [38.4]	113.8 [33.3]	97.7 [28.6]	147.4 [43.2]	128.9 [37.8]	111.5 [32.7]
		Power	10.2	10.0	9.9	10.1	9.9	9.8	10.0	9.9	9.7
	80 [26.7]	Total BTUH [kW]	175.0 [51.3]	168.9 [49.5]	162.8 [47.7]	167.6 [49.1]	161.8 [47.4]	155.9 [45.7]	162.7 [47.7]	157.0 [46.0]	151.3 [44.3]
		Sens BTUH [kW]	110.9 [32.5]	95.3 [27.9]	80.9 [23.7]	128.5 [37.7]	111.7 [32.7]	95.9 [28.1]	144.9 [42.5]	126.8 [37.2]	109.8 [32.2]
		Power	10.6	10.4	10.3	10.5	10.4	10.2	10.4	10.3	10.1
	85 [29.4]	Total BTUH [kW]	170.5 [50.0]	164.5 [48.2]	158.5 [46.4]	163.1 [47.8]	157.4 [46.1]	151.6 [44.4]	158.1 [46.3]	152.5 [44.7]	147.0 [43.1]
		Sens BTUH [kW]	108.5 [31.8]	93.2 [27.3]	79.1 [23.2]	126.1 [36.9]	109.6 [32.1]	94.1 [27.6]	142.4 [41.7]	124.6 [36.5]	108.0 [31.6]
		Power	11.1	10.9	10.7	11.0	10.8	10.6	10.9	10.7	10.5
	90 [32.2]	Total BTUH [kW]	165.9 [48.6]	160.1 [46.9]	154.3 [45.2]	158.5 [46.4]	153.0 [44.8]	147.4 [43.2]	153.5 [45.0]	148.1 [43.4]	142.8 [41.8]
		Sens BTUH [kW]	105.8 [31.0]	91.0 [26.7]	77.2 [22.6]	123.4 [36.2]	107.4 [31.5]	92.3 [27.0]	139.7 [40.9]	122.4 [35.9]	106.2 [31.1]
		Power	11.6	11.4	11.2	11.5	11.3	11.1	11.4	11.2	11
	95 [35]	Total BTUH [kW]	161.4 [47.3]	155.7 [45.6]	150.0 [43.9]	154.0 [45.1]	148.6 [43.5]	143.2 [42.0]	149.0 [43.7]	143.8 [42.1]	138.5 [40.6]
		Sens BTUH [kW]	103.3 [30.3]	88.8 [26.0]	75.3 [22.1]	120.9 [35.4]	105.2 [30.8]	90.5 [26.5]	137.2 [40.2]	120.3 [35.2]	104.3 [30.6]
		Power	12.1	11.9	11.6	12	11.8	11.6	11.9	11.7	11.5
	100 [37.8]	Total BTUH [kW]	156.8 [45.9]	151.3 [44.3]	145.8 [42.7]	149.4 [43.8]	144.2 [42.3]	139.0 [40.7]	144.5 [42.3]	139.4 [40.8]	134.3 [39.3]
		Sens BTUH [kW]	100.6 [29.5]	86.5 [25.3]	73.4 [21.5]	118.2 [34.6]	102.9 [30.1]	88.6 [26.0]	134.6 [39.4]	118.0 [34.6]	102.4 [30.0]
		Power	12.6	12.4	12.2	12.5	12.3	12.1	12.4	12.2	12.0
	105 [40.6]	Total BTUH [kW]	152.3 [44.6]	147.0 [43.1]	141.6 [41.5]	144.9 [42.5]	139.8 [41.0]	134.8 [39.5]	139.9 [41.0]	135.0 [39.6]	130.1 [38.1]
		Sens BTUH [kW]	98.0 [28.7]	84.3 [24.7]	71.5 [20.9]	115.6 [33.9]	100.6 [29.5]	86.7 [25.4]	131.9 [38.6]	115.7 [33.9]	100.5 [29.4]
		Power	13.2	13.0	12.7	13.1	12.9	12.6	13.0	12.8	12.5
	110 [43.3]	Total BTUH [kW]	147.8 [43.3]	142.6 [41.8]	137.4 [40.3]	140.4 [41.1]	135.5 [39.7]	130.6 [38.3]	135.4 [39.7]	130.7 [38.3]	125.9 [36.9]
		Sens BTUH [kW]	95.3 [27.9]	82.0 [24.0]	69.6 [20.4]	112.9 [33.1]	98.4 [28.8]	84.8 [24.8]	129.2 [37.9]	113.5 [33.3]	98.6 [28.9]
		Power	13.8	13.5	13.3	13.7	13.5	13.2	13.6	13.4	13.1
	115 [46.1]	Total BTUH [kW]	143.3 [42.0]	138.3 [40.5]	133.3 [39.1]	135.9 [39.8]	131.2 [38.4]	126.4 [37.0]	130.9 [38.4]	126.4 [37.0]	121.8 [35.7]
		Sens BTUH [kW]	92.6 [27.1]	79.7 [23.4]	67.7 [19.8]	110.1 [32.3]	96.0 [28.1]	82.7 [24.2]	126.4 [37.0]	111.1 [32.6]	96.6 [28.3]
		Power	14.4	14.2	13.9	14.3	14.1	13.8	14.2	14.0	13.7

DR —Depression ratio
dbE —Entering air dry bulb
wbE—Entering air wet bulb

Total —Total capacity x 1000 BTUH
Sens —Sensible capacity x 1000 BTUH
Power—KW input

NOTES: ① When the entering air dry bulb is other than 80°F [27°C], adjust the sensible capacity from the table by adding [1.10 x CFM x (1 – DR) x (dbE – 80)].

[ ] Designates Metric Conversions

COOLING PERFORMANCE DATA—(-)GEDZT090A

			ENTERING INDOOR AIR @ 80°F [26.7°C] dbE ①														
	wbE		71°F [21.7°C]			67°F [19.4°C]			63°F [17.2°C]			61°F [16.1°C]			59°F [15.0°C]		
	CFM [L/s]		3600 [1699]	2775 [1310]	2400 [1133]	3600 [1699]	2775 [1310]	2400 [1133]	3600 [1699]	2775 [1310]	2400 [1133]	3600 [1699]	2775 [1310]	2400 [1133]	3600 [1699]	2775 [1310]	2400 [1133]
	DR ①		0.17	0.13	0.11	0.17	0.13	0.11	0.17	0.13	0.11	0.17	0.13	0.11	0.17	0.13	0.11
OUTDOOR DRY BULB TEMPERATURE °F [°C]	75 [23.9]	Total BTUH [kW]	119.6 [35.0]	113.5 [33.2]	110.7 [32.4]	112.7 [33.0]	107 31.3]	104.3 [30.6]	107.8 [31.6]	102.3 [30.0]	99.8 [29.2]	106.4 [31.2]	100.9 [29.6]	98.4 [28.8]	105.8 [31.0]	100.4 [29.4]	97.9 [28.7]
		Sens BTUH [kW]	70.3 [20.6]	61.8 [18.1]	57.9 [17.0]	83.3 [24.4]	73.2 [21.4]	68.5 [20.1]	96 [28.1]	84.3 [24.7]	79 [23.2]	102.2 [29.9]	89.7 [26.3]	84.1 [24.6]	105.8 [31.0]	94.9 [27.8]	88.9 [26.1]
		Power	5.2	5.1	5	5.1	5	4.9	5.1	4.9	4.9	5	4.9	4.9	5	4.9	4.8
	80 [26.7]	Total BTUH [kW]	116.1 [3.04]	110.1 [32.3]	107.4 [31.5]	109.2 [32.0]	103.6 [30.4]	101.1 [29.6]	104.3 [30.6]	99 [29.0]	96.5 [28.3]	102.9 [30.1]	97.6 [28.6]	95.2 [27.9]	102.3 [30.0]	97.1 [28.4]	94.7 [27.7]
		Sens BTUH [kW]	68.4 [20.1]	60.1 [17.6]	56.3 [16.5]	81.4 [23.9]	71.5 [20.9]	67 [19.6]	94.1 [27.6]	82.7 [24.2]	77.4 [22.7]	100.3 [29.4]	88.1 [25.8]	82.5 [24.2]	102.3 [30.0]	93.2 [27.3]	87.4 [25.6]
		Power	5.6	5.4	5.4	5.5	5.4	5.3	5.5	5.3	5.3	5.4	5.3	5.2	5.4	5.3	5.2
	85 [29.4]	Total BTUH [kW]	112.6 [33.0]	106.8 [31.3]	104.2 [30.5]	105.7 [31.0]	100.3 [29.4]	97.8 [28.7]	100.8 [29.5]	95.6 [28.0]	93.3 [27.3]	99.3 [29.1]	94.2 [27.6]	91.9 [26.9]	98.8 [28.9]	93.7 [27.5]	91.4 [26.8]
		Sens BTUH [kW]	66.6 [19.5]	58.5 [17.1]	54.8 [16.0]	79.5 [23.3]	69.8 [20.5]	65.4 [19.2]	92.3 [27.0]	81 [23.7]	75.9 [22.2]	98.4 [28.8]	86.4 [25.3]	81 [23.7]	98.8 [28.9]	91.6 [26.8]	85.8 [25.1]
		Power	6	5.9	5.8	6	5.8	5.8	5.9	5.8	5.7	5.9	5.7	5.7	5.9	5.7	5.6
	90 [32.2]	Total BTUH [kW]	109 [31.9]	103.4 [30.3]	100.9 [29.6]	102.1 [29.9]	96.9 [28.4]	94.5 [27.7]	97.2 [28.5]	92.2 [27.0]	90 [26.4]	95.8 [28.1]	90.9 [26.6]	88.6 [26.0]	95.2 [27.9]	90.3 [26.5]	88.1 [25.8]
		Sens BTUH [kW]	64.7 [19.0]	56.8 [16.7]	53.2 [15.6]	77.7 [22.8]	68.2 [20.0]	63.9 [18.7]	90.4 [26.5]	79.4 [23.3]	74.4 [21.8]	95.8 [28.1]	84.8 [24.8]	79.4 [23.3]	95.2 [27.9]	90 [26.4]	84.3 [24.7]
		Power	6.6	6.4	6.3	6.5	6.4	6.3	6.5	6.3	6.2	6.4	6.3	6.2	6.4	6.2	6.2
	95 [35]	Total BTUH [kW]	105.4 [30.9]	100 [29.3]	97.5 [28.6]	98.5 [28.9]	93.5 [27.4]	91.2 [26.7]	93.6 [27.4]	88.8 [26.0]	86.6 [25.4]	92.2 [27.0]	87.4 [25.6]	85.3 [25.0]	91.6 [26.8]	86.9 [25.5]	84.8 [24.8]
		Sens BTUH [kW]	62.9 [18.4]	55.2 [16.2]	51.7 [15.2]	75.8 [22.2]	66.6 [19.5]	62.4 [18.3]	88.6 [26.0]	77.8 [22.8]	72.9 [21.4]	92.2 [27.0]	83.2 [24.4]	77.9 [22.8]	91.6 [26.8]	86.9 [25.5]	82.8 [24.3]
		Power	7.2	7	6.9	7.2	7	6.9	7.1	6.9	6.8	7.1	6.9	6.8	7	6.9	6.8
	100 [37.8]	Total BTUH [kW]	101.7 [29.8]	96.5 [28.3]	94.2 [27.6]	94.9 [27.8]	90 [26.4]	87.8 [25.7]	90 [26.4]	85.4 [25.0]	83.3 [24.4]	88.5 [25.9]	84 [24.6]	81.9 [24.0]	88 [25.8]	83.4 [24.5]	81.4 [23.9]
		Sens BTUH [kW]	61 [17.9]	53.6 [15.7]	50.2 [14.7]	74 21.7]	65 [19.0]	60.9 [17.8]	86.7 [25.4]	76.2 [22.3]	71.4 [20.9]	88.5 [25.9]	81.6 [23.9]	76.4 [22.4]	88 [25.8]	83.4 [24.5]	81.3 [23.8]
		Power	7.9	7.7	7.6	7.9	7.7	7.6	7.8	7.6	7.5	7.8	7.6	7.5	7.7	7.5	7.4
	105 [40.6]	Total BTUH [kW]	98.1 [28.7]	93 [27.3]	90.7 [26.6]	91.2 [26.7]	86.5 [25.4]	84.4 [24.7]	86.3 [25.3]	81.9 [24.0]	79.8 [23.4]	84.8 [24.9]	80.5 [23.6]	78.5 [23.0]	84.3 [24.7]	79.9 [23.4]	78 [22.9]
		Sens BTUH [kW]	59.3 [17.4]	52 [15.2]	48.8 [14.3]	72.2 [21.2]	63.4 [18.6]	59.4 [17.4]	84.9 [24.9]	74.6 [21.9]	69.9 [20.5]	84.8 [24.9]	80 [23.4]	74.9 [22.0]	84.3 [24.7]	79.9 [23.4]	78 [22.9]
		Power	8.7	8.5	8.4	8.6	8.4	8.3	8.6	8.4	8.3	8.5	8.3	8.2	8.5	8.3	8.2
	110 [43.3]	Total BTUH [kW]	94.3 [27.6]	89.5 [26.2]	87.3 [25.6]	87.5 [25.6]	83 [24.3]	81 [23.7]	82.6 [24.2]	78.3 [23.0]	76.4 [22.4]	81.1 [23.8]	76.9 [22.5]	75.1 [22.0]	80.5 [23.6]	76.4 [22.4]	74.5 [21.8]
		Sens BTUH [kW]	57.5 [16.8]	50.5 [14.8]	47.3 [13.9]	70.4 [20.6]	61.9 [18.1]	57.9 [17.0]	82.6 [24.2]	73 [21.4]	68.4 [20.1]	81.1 [23.8]	76.9 [22.5]	73.5 [21.5]	80.5 [23.6]	76.4 [22.4]	74.5 [21.8]
		Power	9.5	9.3	9.2	9.5	9.2	9.1	9.4	9.2	9.1	9.4	9.2	9	9.4	9.1	9
	115 [46.1]	Total BTUH [kW]	90.6 [26.5]	85.9 [25.2]	83.8 [24.6]	83.7 [24.5]	79.4 [23.3]	77.5 [22.7]	78.8 [23.1]	74.8 [21.9]	72.9 [21.4]	77.3 [22.7]	73.4 [21.5]	71.6 [21.0]	76.8 [22.5]	72.8 [21.3]	71.1 [20.8]
		Sens BTUH [kW]	55.7 [16.3]	48.9 [14.3]	45.8 [13.4]	68.7 [20.1]	60.3 [17.7]	56.5 [16.6]	78.8 [23.1]	71.5 [20.9]	67 [19.6]	77.3 [22.7]	73.4 [21.5]	71.6 [21.0]	76.8 [22.5]	72.8 [21.3]	71.1 [20.8]
		Power	10.5	10.2	10.1	10.4	10.2	10	10.4	10.1	10	10.3	10.1	9.9	10.3	10	9.9
	120 [48.9]	Total BTUH [kW]	86.8 [25.4]	82.3 [24.1]	80.3 [23.5]	79.9 [23.4]	75.8 [22.2]	74 [21.7]	75 [22.0]	71.1 [20.8]	69.4 [20.3]	73.5 [21.6]	69.8 [20.4]	68.1 [19.9]	73 [21.4]	69.2 [20.3]	67.5 [19.8]
		Sens BTUH [kW]	54 [15.8]	47.4 [13.9]	44.4 [13.0]	66.9 [19.6]	58.8 [17.2]	55.1 [16.1]	75 [22.0]	70 [20.5]	65.5 [19.2]	73.5 [21.6]	69.8 [20.4]	68.1 [19.9]	73 [21.4]	69.2 [20.3]	67.5 [19.8]
		Power	11.5	11.2	11.1	11.4	11.1	11	11.4	11.1	11	11.3	11.1	10.9	11.3	11	10.9
	125 [51.7]	Total BTUH [kW]	82.9 [24.3]	78.7 [23.1]	76.8 [22.5]	76.1 [22.3]	72.2 [21.2]	70.4 [20.6]	71.2 [20.9]	67.5 [19.8]	65.8 [19.3]	69.7 [20.4]	66.1 [19.4]	64.5 [18.9]	69.1 [20.3]	65.6 [19.2]	64 [18.8]
		Sens BTUH [kW]	52.3 [15.3]	45.9 [13.4]	43 [12.6]	65.2 [19.1]	57.3 [16.8]	53.7 [15.7]	71.2 [20.9]	67.5 [19.8]	64.1 [18.8]	69.7 [20.4]	66.1 [19.4]	64.5 [18.9]	69.1 [20.3]	65.6 [19.2]	64 [18.8]
		Power	12.6	12.3	12.1	12.5	12.2	12.1	12.5	12.1	12	12.4	12.1	12	12.4	12.1	11.9

DR —Depression ratio
dbE —Entering air dry bulb
wbE—Entering air wet bulb

Total —Total capacity x 1000 BTUH
Sens —Sensible capacity x 1000 BTUH
Power —KW input

NOTES: ① When the entering air dry bulb is other than 80°F [27°C], adjust the sensible capacity from the table by adding [1.10 x CFM x (1 – DR) x (dbE – 80)].

[ ] Designates Metric Conversions

COOLING PERFORMANCE DATA—(-)GEDZT102A

ENTERING INDOOR AIR @ 80°F [26.7°C] dbE ①																		
wbE			71°F [21.7°C]			67°F [19.4°C]			63°F [17.2°C]			61°F [16.1°C]			59°F [15.0°C]		
CFM [L/s]			4100 [1935]	3200 [1510]	2700 [1274]	4100 [1935]	3200 [1510]	2700 [1274]	4100 [1935]	3200 [1510]	2700 [1274]	4100 [1935]	3200 [1510]	2700 [1274]	4100 [1935]	3200 [1510]	2700 [1274]
DR ①			0.11	0.05	0.01	0.11	0.05	0.01	0.11	0.05	0.01	0.11	0.05	0.01	0.11	0.05	0.01
OUTDOOR DRY BULB TEMPERATURE °F [°C]	75 [23.9]	Total BTUH [kW]	129.9 [38.1]	123.6 [36.2]	120.1 [35.2]	122.7 [36.0]	116.7 [34.2]	113.4 [33.2]	118.3 [34.7]	112.5 [33.0]	109.3 [32.0]	117.5 [34.4]	111.8 [32.8]	108.6 [31.8]	118 [34.6]	112.2 [32.9]	109 [32.0]
		Sens BTUH [kW]	81.3 [23.8]	71.9 [21.1]	66.6 [19.5]	96.4 [28.2]	85.2 [25.0]	79 [23.1]	110.1 [32.3]	97.3 [28.5]	90.2 [26.4]	116.1 [34.0]	102.6 [30.1]	95.2 [27.9]	118 [34.6]	107.3 [31.5]	99.5 [29.2]
		Power	6.2	6.1	6	6.1	6	5.9	6.1	5.9	5.8	6	5.9	5.8	6	5.9	5.8
	80 [26.7]	Total BTUH [kW]	125.7 [36.8]	119.5 [35.0]	116.1 [34.0]	118.5 [34.7]	112.7 [33.0]	109.5 [32.1]	114 [33.4]	108.5 [31.8]	105.4 [30.9]	113.3 [33.2]	107.8 [31.6]	104.7 [30.7]	113.7 [33.3]	108.2 [31.7]	105.1 [30.8]
		Sens BTUH [kW]	79.2 [23.2]	70 [20.5]	64.9 [19.0]	94.3 [27.6]	83.3 [24.4]	77.2 [22.6]	108 [31.6]	95.4 [28.0]	88.5 [25.9]	113.3 [33.2]	100.8 [29.5]	93.4 [27.4]	113.7 [33.3]	105.5 [30.9]	97.8 [28.7]
		Power	6.6	6.4	6.3	6.5	6.3	6.2	6.4	6.3	6.2	6.4	6.2	6.2	6.4	6.2	6.1
	85 [29.4]	Total BTUH [kW]	121.4 [35.6]	115.5 [33.8]	112.2 [32.9]	114.2 [33.5]	108.7 [31.8]	105.6 [30.9]	109.8 [32.2]	104.4 [30.6]	101.5 [29.7]	109 [31.9]	103.7 [30.4]	100.8 [29.5]	109.5 [32.1]	104.2 [30.5]	101.2 [29.7]
		Sens BTUH [kW]	77 [22.6]	68.1 [20.0]	63.1 [18.5]	92.1 [27.0]	81.4 [23.9]	75.5 [22.1]	105.8 [31.0]	93.5 [27.4]	86.7 [25.4]	109 [31.9]	98.9 [29.0]	91.7 [26.9]	109.5 [32.1]	103.6 [30.4]	96 [28.1]
		Power	6.9	6.8	6.7	6.9	6.7	6.6	6.8	6.6	6.6	6.8	6.6	6.5	6.7	6.6	6.5
	90 [32.2]	Total BTUH [kW]	117.1 [34.3]	111.4 [32.7]	108.3 [31.7]	110 [32.2]	104.6 [30.7]	101.6 [29.8]	105.5 [30.9]	100.4 [29.4]	97.5 [28.6]	104.8 [30.7]	99.7 [29.2]	96.8 [28.4]	105.2 [30.8]	100.1 [29.3]	97.3 [28.5]
		Sens BTUH [kW]	74.9 [21.9]	66.2 [19.4]	61.4 [18.0]	89.9 [26.4]	79.5 [23.3]	73.7 [21.6]	103.6 [30.4]	91.6 [26.8]	84.9 [24.9]	104.8 [30.7]	97 [28.4]	89.9 [26.3]	105.2 [30.8]	100.1 [29.3]	94.3 [27.6]
		Power	7.4	7.2	7.1	7.3	7.1	7	7.2	7.1	7	7.2	7	6.9	7.2	7	6.9
	95 [35]	Total BTUH [kW]	112.9 [33.1]	107.4 [31.5]	104.3 [30.6]	105.7 [31.0]	100.5 [29.5]	97.7 [28.6]	101.2 [29.7]	96.3 [28.2]	93.6 [27.4]	100.5 [29.4]	95.6 [28.0]	92.9 [27.2]	100.9 [29.6]	96 [28.1]	93.3 [27.3]
		Sens BTUH [kW]	72.6 [21.3]	64.2 [18.8]	59.5 [17.4]	87.7 [25.7]	77.5 [22.7]	71.9 [21.1]	101.2 [29.7]	89.7 [26.3]	83.1 [24.4]	100.5 [29.4]	95 [27.8]	88.1 [25.8]	100.9 [29.6]	96 [28.1]	92.4 [27.1]
		Power	7.8	7.6	7.5	7.7	7.6	7.4	7.7	7.5	7.4	7.6	7.5	7.4	7.6	7.4	7.3
	100 [37.8]	Total BTUH [kW]	108.6 [31.8]	103.3 [30.3]	100.4 [29.4]	101.4 [29.7]	96.5 [28.3]	93.7 [27.5]	97 [28.4]	92.2 [27.0]	89.6 [26.3]	96.2 [28.2]	91.5 [26.8]	88.9 [26.1]	96.7 [28.3]	92 [26.9]	89.3 [26.2]
		Sens BTUH [kW]	70.4 [20.6]	62.2 [18.2]	57.7 [16.9]	85.5 [25.0]	75.5 [22.1]	70 [20.5]	97 [28.4]	87.7 [25.7]	81.3 [23.8]	96.2 [28.2]	91.5 [26.8]	86.2 [25.3]	96.7 [28.3]	92 [26.9]	89.3 [26.2]
		Power	8.3	8.1	8	8.2	8	7.9	8.2	8	7.8	8.1	7.9	7.8	8.1	7.9	7.8
	105 [40.6]	Total BTUH [kW]	104.3 [30.6]	99.2 [29.1]	96.4 [28.2]	97.1 [28.4]	92.4 [27.1]	89.7 [26.3]	92.7 [27.2]	88.1 [25.8]	85.6 [25.1]	91.9 [26.9]	87.4 [25.6]	84.9 [24.9]	92.4 [27.1]	87.9 [25.7]	85.4 [25.0]
		Sens BTUH [kW]	68.1 [20.0]	60.2 [17.6]	55.8 [16.4]	83.2 [24.4]	73.5 [21.5]	68.1 [20.0]	92.7 [27.2]	85.6 [25.1]	79.4 [23.3]	91.9 [26.9]	87.4 [25.6]	84.3 [24.7]	92.4 [27.1]	87.9 [25.7]	85.4 [25.0]
		Power	8.8	8.6	8.5	8.7	8.5	8.4	8.7	8.5	8.3	8.6	8.4	8.3	8.6	8.4	8.3
	110 [43.3]	Total BTUH [kW]	99.9 [29.3]	95.1 [27.9]	92.4 [27.1]	92.8 [27.2]	88.2 [25.9]	85.7 [25.1]	88.3 [25.9]	84 [24.6]	81.6 [23.9]	87.6 [25.7]	83.3 [24.4]	80.9 [23.7]	88 [25.8]	83.7 [24.5]	81.4 [23.8]
		Sens BTUH [kW]	65.8 [19.3]	58.1 [17.0]	53.9 [15.8]	80.8 [23.7]	71.4 [20.9]	66.2 [19.4]	88.3 [25.9]	83.6 [24.5]	77.5 [22.7]	87.6 [25.7]	83.3 [24.4]	80.9 [23.7]	88 [25.8]	83.7 [24.5]	81.4 [23.8]
		Power	9.3	9.1	9	9.3	9	8.9	9.2	9	8.9	9.2	9	8.8	9.1	8.9	8.8
	115 [46.1]	Total BTUH [kW]	95.6 [28.0]	91 [26.7]	88.4 [25.9]	88.4 [25.9]	84.1 [24.7]	81.7 [24.0]	84 [24.6]	79.9 [23.4]	77.6 [22.8]	83.2 [24.4]	79.2 [23.2]	76.9 [22.5]	83.7 [24.5]	79.6 [23.3]	77.4 [22.7]
		Sens BTUH [kW]	63.4 [18.6]	56 [16.4]	51.9 [15.2]	78.4 [23.0]	69.3 [20.3]	64.3 [18.8]	84 [24.6]	79.9 [23.4]	75.5 [22.1]	83.2 [24.4]	79.2 [23.2]	76.9 [22.5]	83.7 [24.5]	79.6 [23.3]	77.4 [22.7]
		Power	9.9	9.7	9.5	9.8	9.6	9.5	9.8	9.5	9.4	9.7	9.5	9.4	9.7	9.5	9.4
	120 [48.9]	Total BTUH [kW]	91.3 [26.7]	86.8 [25.4]	84.4 [24.7]	84.1 [24.6]	80 [23.4]	77.7 [22.8]	79.6 [23.3]	75.8 [22.2]	73.6 [21.6]	78.9 [23.1]	75 [22.0]	72.9 [21.4]	79.3 [23.3]	75.5 [22.1]	73.3 [21.5]
		Sens BTUH [kW]	61 [17.9]	53.9 [15.8]	50 [14.6]	76 [22.3]	67.2 [19.7]	62.3 [18.3]	79.6 [23.3]	75.8 [22.2]	73.5 [21.6]	78.9 [23.1]	75 [22.0]	72.9 [21.4]	79.3 [23.3]	75.5 [22.1]	73.3 [21.5]
		Power	10.5	10.3	10.1	10.5	10.2	10.1	10.4	10.1	10	10.4	10.1	10	10.3	10.1	9.9
	125 [51.7]	Total BTUH [kW]	86.9 [25.5]	82.7 [24.2]	80.3 [23.5]	79.7 [23.4]	75.8 [22.2]	73.7 [21.6]	75.3 [22.1]	71.6 [21.0]	69.6 [20.4]	74.5 [21.8]	70.9 [20.8]	68.9 [20.2]	75 [22.0]	71.3 [20.9]	69.3 [20.3]
		Sens BTUH [kW]	58.5 [17.1]	51.7 [15.2]	48 [14.1]	73.6 [21.6]	65 [19.1]	60.3 [17.7]	75.3 [22.1]	71.6 [21.0]	69.6 [20.4]	74.5 [21.8]	70.9 [20.8]	68.9 [20.2]	75 [22.0]	71.3 [20.9]	69.3 [20.3]
		Power	11.2	10.9	10.7	11.1	10.8	10.7	11	10.8	10.6	11	10.7	10.6	11	10.7	10.5

DR —Depression ratio
dbE —Entering air dry bulb
wbE—Entering air wet bulb

Total —Total capacity x 1000 BTUH
Sens —Sensible capacity x 1000 BTUH
Power —KW input

NOTES: ① When the entering air dry bulb is other than 80°F [27°C], adjust the sensible capacity from the table by adding [1.10 x CFM x (1 – DR) x (dbE – 80)].

[ ] Designates Metric Conversions

COOLING PERFORMANCE DATA—(-)GEDZT120A

			ENTERING INDOOR AIR @ 80°F [26.7°C] dbE ①															
wbE			71°F [21.7°C]			67°F [19.4°C]			63°F [17.2°C]			61°F [16.1°C]			59°F [15.0°C]		
CFM [L/s]			4800 [2265]	3750 [1770]	3200 [1510]	4800 [2265]	3750 [1770]	3200 [1510]	4800 [2265]	3750 [1770]	3200 [1510]	4800 [2265]	3750 [1770]	3200 [1510]	4800 [2265]	3750 [1770]	3200 [1510]
DR ①			0.09	0.03	0	0.09	0.03	0	0.09	0.03	0	0.09	0.03	0	0.09	0.03	0
OUTDOOR DRY BULB TEMPERATURE °F [°C]	75 [23.9]	Total BTUH [kW]	155.3 [45.5]	147.8 [43.3]	143.8 [42.2]	147.8 [43.3]	140.7 [41.2]	136.9 [40.1]	142.8 [41.8]	135.8 [39.8]	132.2 [38.7]	141.5 [41.5]	134.7 [39.5]	131.1 [38.4]	141.4 [41.4]	134.5 [39.4]	130.9 [38.4]
		Sens BTUH [kW]	97.3 [28.5]	86.1 [25.2]	80.2 [23.5]	115.8 [33.9]	102.4 [30.0]	95.4 [28.0]	132.9 [38.9]	117.5 [34.4]	109.5 [32.1]	140.6 [41.2]	124.3 [36.4]	115.8 [33.9]	141.4 [41.4]	130.4 [38.2]	121.4 [35.6]
		Power	7.5	7.3	7.2	7.4	7.2	7.1	7.3	7.1	7	7.2	7.1	7	7.2	7	6.9
	80 [26.7]	Total BTUH [kW]	150.6 [44.1]	143.4 [42.0]	139.5 [40.9]	143.2 [42.0]	136.2 [39.9]	132.6 [38.9]	138.1 [40.5]	131.4 [38.5]	127.9 [37.5]	136.9 [40.1]	130.2 [38.2]	126.8 [37.1]	136.7 [40.1]	130.1 [38.1]	126.6 [37.1]
		Sens BTUH [kW]	94.9 [27.8]	84 [24.6]	78.2 [22.9]	113.5 [33.2]	100.3 [29.4]	93.5 [27.4]	130.5 [38.2]	115.4 [33.8]	107.5 [31.5]	136.9 [40.1]	122.2 [35.8]	113.8 [33.4]	136.7 [40.1]	128.3 [37.6]	119.5 [35.0]
		Power	7.9	7.7	7.6	7.8	7.6	7.5	7.7	7.5	7.4	7.7	7.5	7.4	7.6	7.4	7.3
	85 [29.4]	Total BTUH [kW]	146 [42.8]	138.9 [40.7]	135.2 [39.6]	138.5 [40.6]	131.8 [38.6]	128.3 [37.6]	133.5 [39.1]	127 [37.2]	123.6 [36.2]	132.2 [38.7]	125.8 [36.9]	122.5 [35.9]	132.1 [38.7]	125.7 [36.8]	122.3 [35.9]
		Sens BTUH [kW]	92.5 [27.1]	81.8 [24.0]	76.2 [22.3]	111 [32.5]	98.2 [28.8]	91.5 [26.8]	128.1 [37.5]	113.3 [33.2]	105.5 [30.9]	132.2 [38.7]	120.1 [35.2]	111.9 [32.8]	132.1 [38.7]	125.7 [36.8]	117.5 [34.4]
		Power	8.3	8.1	8	8.2	8	7.9	8.2	8	7.9	8.1	7.9	7.8	8.1	7.9	7.8
	90 [32.2]	Total BTUH [kW]	141.4 [41.4]	134.5 [39.4]	131 [38.4]	133.9 [39.2]	127.4 [37.3]	124 [36.3]	128.8 [37.8]	122.6 [35.9]	119.3 [35.0]	127.6 [37.4]	121.4 [35.6]	118.2 [34.6]	127.5 [37.4]	121.3 [35.5]	118.1 [34.6]
		Sens BTUH [kW]	90.1 [26.4]	79.7 [23.3]	74.2 [21.7]	108.6 [31.8]	96 [28.1]	89.5 [26.2]	125.6 [36.8]	111.1 [32.6]	103.5 [30.3]	127.6 [37.4]	117.9 [34.5]	109.8 [32.2]	127.5 [37.4]	121.3 [35.5]	115.5 [33.8]
		Power	8.8	8.6	8.5	8.7	8.5	8.4	8.6	8.4	8.3	8.6	8.4	8.3	8.5	8.3	8.2
	95 [35]	Total BTUH [kW]	136.8 [40.1]	130.2 [38.1]	126.7 [37.1]	129.3 [37.9]	123 [36.1]	119.7 [35.1]	124.2 [36.4]	118.2 [34.6]	115.1 [33.7]	123 [36.0]	117 [34.3]	113.9 [33.4]	122.9 [36.0]	116.9 [34.3]	113.8 [33.3]
		Sens BTUH [kW]	87.6 [25.7]	77.5 [22.7]	72.2 [21.1]	106.1 [31.1]	93.8 [27.5]	87.4 [25.6]	123.1 [36.1]	108.9 [31.9]	101.5 [29.7]	123 [36.0]	115.7 [33.9]	107.8 [31.6]	122.9 [36.0]	116.9 [34.3]	113.4 [33.2]
		Power	9.3	9.1	9	9.2	9	8.9	9.1	8.9	8.8	9.1	8.9	8.8	9.1	8.8	8.7
	100 [37.8]	Total BTUH [kW]	132.2 [38.7]	125.8 [36.9]	122.4 [35.9]	124.7 [36.5]	118.7 [34.8]	115.5 [33.8]	119.6 [35.1]	113.8 [33.4]	110.8 [32.5]	118.4 [34.7]	112.7 [33.0]	109.7 [32.1]	118.3 [34.7]	112.5 [33.0]	109.5 [32.1]
		Sens BTUH [kW]	85.1 [24.9]	75.2 [22.0]	70.1 [20.5]	103.6 [30.3]	91.6 [26.8]	85.3 [25.0]	119.6 [35.1]	106.7 [31.3]	99.4 [29.1]	118.4 [34.7]	112.7 [33.0]	105.7 [31.0]	118.3 [34.7]	112.5 [33.0]	109.5 [32.1]
		Power	9.9	9.6	9.5	9.8	9.5	9.4	9.7	9.5	9.3	9.6	9.4	9.3	9.6	9.4	9.2
	105 [40.6]	Total BTUH [kW]	127.6 [37.4]	121.4 [35.6]	118.2 [34.6]	120.1 [35.2]	114.3 [33.5]	111.2 [32.6]	115.1 [33.7]	109.5 [32.1]	106.6 [31.2]	113.8 [33.4]	108.3 [31.7]	105.4 [30.9]	113.7 [33.3]	108.2 [31.7]	105.3 [30.9]
		Sens BTUH [kW]	82.5 [24.2]	73 [21.4]	68 [19.9]	101 [29.6]	89.3 [26.2]	83.2 [24.4]	115.1 [33.7]	104.4 [30.6]	97.3 [28.5]	113.8 [33.4]	108.3 [31.7]	103.6 [30.4]	113.7 [33.3]	108.2 [31.7]	105.3 [30.9]
		Power	10.5	10.2	10.1	10.4	10.1	10	10.3	10	9.9	10.2	10	9.8	10.2	9.9	9.8
	110 [43.3]	Total BTUH [kW]	123 [36.1]	117.1 [34.3]	114 [33.4]	115.5 [33.9]	109.9 [32.2]	107 [31.4]	110.5 [32.4]	105.1 [30.8]	102.3 [30.0]	109.3 [32.0]	104 [30.5]	101.2 [29.7]	109.1 [32.0]	103.8 [30.4]	101.1 [29.6]
		Sens BTUH [kW]	79.9 [23.4]	70.6 [20.7]	65.8 [19.3]	98.4 [28.8]	87 [25.5]	81.1 [23.8]	110.5 [32.4]	102.1 [29.9]	95.1 [27.9]	109.3 [32.0]	104 [30.5]	101.2 [29.7]	109.1 [32.0]	103.8 [30.4]	101.1 [29.6]
		Power	11.1	10.8	10.7	11	10.7	10.6	10.9	10.6	10.5	10.8	10.6	10.4	10.8	10.5	10.4
	115 [46.1]	Total BTUH [kW]	118.5 [34.7]	112.7 [33.0]	109.7 [32.2]	111 [32.5]	105.6 [31.0]	102.8 [30.1]	105.9 [31.0]	100.8 [29.5]	98.1 [28.8]	104.7 [30.7]	99.6 [29.2]	97 [28.4]	104.6 [30.6]	99.5 [29.2]	96.8 [28.4]
		Sens BTUH [kW]	77.2 [22.6]	68.3 [20.0]	63.6 [18.6]	95.7 [28.1]	84.7 [24.8]	78.9 [23.1]	105.9 [31.0]	99.8 [29.2]	92.9 [27.2]	104.7 [30.7]	99.6 [29.2]	97 [28.4]	104.6 [30.6]	99.5 [29.2]	96.8 [28.4]
		Power	11.7	11.4	11.3	11.6	11.3	11.2	11.5	11.2	11.1	11.5	11.2	11.1	11.4	11.2	11
	120 [48.9]	Total BTUH [kW]	113.9 [33.4]	108.4 [31.8]	105.5 [30.9]	106.5 [31.2]	101.3 [29.7]	98.6 [28.9]	101.4 [29.7]	96.5 [28.3]	93.9 [27.5]	100.2 [29.4]	95.3 [27.9]	92.8 [27.2]	100 [29.3]	95.2 [27.9]	92.6 [27.1]
		Sens BTUH [kW]	74.5 [21.8]	65.9 [19.3]	61.4 [18.0]	93 [27.3]	82.3 [24.1]	76.7 [22.5]	101.4 [29.7]	96.5 [28.3]	90.7 [26.6]	100.2 [29.4]	95.3 [27.9]	92.8 [27.2]	100 [29.3]	95.2 [27.9]	92.6 [27.1]
		Power	12.4	12.1	11.9	12.3	12	11.8	12.2	11.9	11.7	12.1	11.9	11.7	12.1	11.8	11.7
	125 [51.7]	Total BTUH [kW]	109.4 [32.1]	104.1 [30.5]	101.3 [29.7]	101.9 [29.9]	97 [28.4]	94.4 [27.7]	96.9 [28.4]	92.2 [27.0]	89.7 [26.3]	95.6 [28.0]	91 [26.7]	88.6 [26.0]	95.5 [28.0]	90.9 [26.6]	88.5 [25.9]
		Sens BTUH [kW]	71.8 [21.0]	63.5 [18.6]	59.2 [17.3]	90.3 [26.5]	79.9 [23.4]	74.4 [21.8]	96.9 [28.4]	92.2 [27.0]	88.5 [25.9]	95.6 [28.0]	91 [26.7]	88.6 [26.0]	95.5 [28.0]	90.9 [26.6]	88.5 [25.9]
		Power	13.1	12.8	12.6	13	12.7	12.5	12.9	12.6	12.4	12.9	12.5	12.4	12.8	12.5	12.3

DR —Depression ratio
dbE —Entering air dry bulb
wbE—Entering air wet bulb

Total —Total capacity x 1000 BTUH
Sens —Sensible capacity x 1000 BTUH
Power —KW input

NOTES: ① When the entering air dry bulb is other than 80°F [27°C], adjust the sensible capacity from the table by adding [1.10 x CFM x (1 – DR) x (dbE – 80)].

[ ] Designates Metric Conversions

COOLING PERFORMANCE DATA—(-)GEDZT150A

ENTERING INDOOR AIR @ 80°F [26.7°C] dbE ①										
wbE			71°F [21.7°C]			67°F [19.4°C]			63°F [17.2°C]		
CFM [L/s]			4500 [2124]	3750 [1770]	3000 [1416]	4500 [2124]	3750 [1770]	3000 [1416]	4500 [2124]	3750 [1770]	3000 [1416]
DR ①			0	0.01	0.09	0	0.01	0.09	0	0.01	0.09
OUTDOOR DRY BULB TEMPERATURE °F [°C]	75 [23.9]	Total BTUH [kW]	179.6 [52.6]	173.3 [50.8]	167.0 [48.9]	172.2 [50.5]	166.2 [48.7]	160.2 [46.9]	167.3 [49.0]	161.4 [47.3]	155.5 [45.6]
		Sens BTUH [kW]	113.4 [33.2]	97.4 [28.5]	82.6 [24.2]	131.0 [38.4]	113.8 [33.3]	97.7 [28.6]	147.4 [43.2]	128.9 [37.8]	111.5 [32.7]
		Power	10.2	10.0	9.9	10.1	9.9	9.8	10.0	9.9	9.7
	80 [26.7]	Total BTUH [kW]	175.0 [51.3]	168.9 [49.5]	162.8 [47.7]	167.6 [49.1]	161.8 [47.4]	155.9 [45.7]	162.7 [47.7]	157.0 [46.0]	151.3 [44.3]
		Sens BTUH [kW]	110.9 [32.5]	95.3 [27.9]	80.9 [23.7]	128.5 [37.7]	111.7 [32.7]	95.9 [28.1]	144.9 [42.5]	126.8 [37.2]	109.8 [32.2]
		Power	10.6	10.4	10.3	10.5	10.4	10.2	10.4	10.3	10.1
	85 [29.4]	Total BTUH [kW]	170.5 [50.0]	164.5 [48.2]	158.5 [46.4]	163.1 [47.8]	157.4 [46.1]	151.6 [44.4]	158.1 [46.3]	152.5 [44.7]	147.0 [43.1]
		Sens BTUH [kW]	108.5 [31.8]	93.2 [27.3]	79.1 [23.2]	126.1 [36.9]	109.6 [32.1]	94.1 [27.6]	142.4 [41.7]	124.6 [36.5]	108.0 [31.6]
		Power	11.1	10.9	10.7	11.0	10.8	10.6	10.9	10.7	10.5
	90 [32.2]	Total BTUH [kW]	165.9 [48.6]	160.1 [46.9]	154.3 [45.2]	158.5 [46.4]	153.0 [44.8]	147.4 [43.2]	153.5 [45.0]	148.1 [43.4]	142.8 [41.8]
		Sens BTUH [kW]	105.8 [31.0]	91.0 [26.7]	77.2 [22.6]	123.4 [36.2]	107.4 [31.5]	92.3 [27.0]	139.7 [40.9]	122.4 [35.9]	106.2 [31.1]
		Power	11.6	11.4	11.2	11.5	11.3	11.1	11.4	11.2	11.0
	95 [35]	Total BTUH [kW]	161.4 [47.3]	155.7 [45.6]	150.0 [43.9]	154.0 [45.1]	148.6 [43.5]	143.2 [42.0]	149.0 [43.7]	143.8 [42.1]	138.5 [40.6]
		Sens BTUH [kW]	103.3 [30.3]	88.8 [26.0]	75.3 [22.1]	120.9 [35.4]	105.2 [30.8]	90.5 [26.5]	137.2 [40.2]	120.3 [35.2]	104.3 [30.6]
		Power	12.1	11.9	11.6	12.0	11.8	11.6	11.9	11.7	11.5
	100 [37.8]	Total BTUH [kW]	156.8 [45.9]	151.3 [44.3]	145.8 [42.7]	149.4 [43.8]	144.2 [42.3]	139.0 [40.7]	144.5 [42.3]	139.4 [40.8]	134.3 [39.3]
		Sens BTUH [kW]	100.6 [29.5]	86.5 [25.3]	73.4 [21.5]	118.2 [34.6]	102.9 [30.1]	88.6 [26.0]	134.6 [39.4]	118.0 [34.6]	102.4 [30.0]
		Power	12.6	12.4	12.2	12.5	12.3	12.1	12.4	12.2	12.0
	105 [40.6]	Total BTUH [kW]	152.3 [44.6]	147.0 [43.1]	141.6 [41.5]	144.9 [42.5]	139.8 [41.0]	134.8 [39.5]	139.9 [41.0]	135.0 [39.6]	130.1 [38.1]
		Sens BTUH [kW]	98.0 [28.7]	84.3 [24.7]	71.5 [20.9]	115.6 [33.9]	100.6 [29.5]	86.7 [25.4]	131.9 [38.6]	115.7 [33.9]	100.5 [29.4]
		Power	13.2	13.0	12.7	13.1	12.9	12.6	13	12.8	12.5
	110 [43.3]	Total BTUH [kW]	147.8 [43.3]	142.6 [41.8]	137.4 [40.3]	140.4 [41.1]	135.5 [39.7]	130.6 [38.3]	135.4 [39.7]	130.7 [38.3]	125.9 [36.9]
		Sens BTUH [kW]	95.3 [27.9]	82.0 [24.0]	69.6 [20.4]	112.9 [33.1]	98.4 [28.8]	84.8 [24.8]	129.2 [37.9]	113.5 [33.3]	98.6 [28.9]
		Power	13.8	13.5	13.3	13.7	13.5	13.2	13.6	13.4	13.1
	115 [46.1]	Total BTUH [kW]	143.3 [42.0]	138.3 [40.5]	133.3 [39.1]	135.9 [39.8]	131.2 [38.4]	126.4 [37.0]	130.9 [38.4]	126.4 [37.0]	121.8 [35.7]
		Sens BTUH [kW]	92.6 [27.1]	79.7 [23.4]	67.7 [19.8]	110.1 [32.3]	96.0 [28.1]	82.7 [24.2]	126.4 [37.0]	111.1 [32.6]	96.6 [28.3]
		Power	14.4	14.2	13.9	14.3	14.1	13.8	14.2	14.0	13.7

DR —Depression ratio
dbE —Entering air dry bulb
wbE —Entering air wet bulb

Total —Total capacity x 1000 BTUH
Sens —Sensible capacity x 1000 BTUH
Power —KW input

NOTES: ① When the entering air dry bulb is other than 80°F [27°C], adjust the sensible capacity from the table by adding [1.10 x CFM x (1 – DR) x (dbE – 80)].

[ ] Designates Metric Conversions

Appendix D – Reheat Data for (-)GEDZS 7.5 Ton

GROSS SYSTEMS PERFORMANCE DATA (LOW REHEAT MODE)—(-)GEDZS090

ENTERING INDOOR AIR @ 75°F [23.9°C] dbE ①												
wbE			65.3°F [18.5°C]			64°F [17.8°C]			62.5°F [16.9°C]			
CFM [L/s]			1800 [850]	1700 [802]	1200 [566]	1800 [850]	1700 [802]	1200 [566]	1800 [850]	1700 [802]	1200 [566]	
OUTDOOR DRY BULB TEMPERATURE °F [°C]	60 [15.6]	Total BTUH [kW]	29.7 [8.7]	29.4 [8.6]	27.9 [8.2]	27.0 [7.9]	26.7 [7.8]	25.3 [7.4]	26.6 [7.8]	26.4 [7.7]	24.9 [7.3]	
		Sens BTUH [kW]	6.5 [1.9]	6.3 [1.8]	5.4 [1.6]	9.0 [2.6]	8.7 [2.6]	7.5 [2.2]	11.4 [3.4]	11.1 [3.3]	9.6 [2.8]	
		Power	3.2	3.1	3.1	3.2	3.2	3.1	3.2	3.2	3.1	
	65 [18.3]	Total BTUH [kW]	29.5 [8.6]	29.2 [8.5]	27.6 [8.1]	26.7 [7.8]	26.4 [7.7]	25.0 [7.3]	26.4 [7.7]	26.1 [7.6]	24.7 [7.2]	
		Sens BTUH [kW]	5.0 [1.5]	4.9 [1.4]	4.2 [1.2]	7.6 [2.2]	7.4 [2.2]	6.3 [1.9]	10.0 [2.9]	9.7 [2.9]	8.4 [2.5]	
		Power	3.2	3.2	3.1	3.3	3.2	3.2	3.2	3.2	3.1	
	70 [21.1]	Total BTUH [kW]	28.8 [8.4]	28.5 [8.4]	27.0 [7.9]	26.0 [7.6]	25.8 [7.6]	24.4 [7.1]	25.7 [7.5]	25.4 [7.5]	24.1 [7.1]	
		Sens BTUH [kW]	3.7 [1.1]	3.6 [1.0]	3.1 [0.9]	6.2 [1.8]	6.0 [1.8]	5.2 [1.5]	8.6 [2.5]	8.4 [2.5]	7.2 [2.1]	
		Power	3.2	3.2	3.1	3.3	3.3	3.2	3.3	3.3	3.2	
	75 [23.9]	Total BTUH [kW]	27.8 [8.1]	27.5 [8.1]	26.0 [7.6]	25.0 [7.3]	24.7 [7.2]	23.4 [6.9]	24.7 [7.2]	24.4 [7.2]	23.1 [6.8]	
		Sens BTUH [kW]	2.3 [0.7]	2.3 [0.7]	2.0 [0.6]	4.9 [1.4]	4.7 [1.4]	4.1 [1.2]	7.3 [2.1]	7.1 [2.1]	6.1 [1.8]	
		Power	3.3	3.3	3.2	3.4	3.4	3.3	3.4	3.4	3.3	
	80 [26.7]	Total BTUH [kW]	26.3 [7.7]	26.0 [7.6]	24.6 [7.2]	23.5 [6.9]	23.3 [6.8]	22.1 [6.5]	23.2 [6.8]	23.0 [6.7]	21.7 [6.4]	
		Sens BTUH [kW]	1.1 [0.3]	1.0 [0.3]	0.9 [0.3]	3.6 [1.0]	3.5 [1.0]	3.0 [0.9]	6.0 [1.8]	5.9 [1.7]	5.1 [1.5]	
		Power	3.4	3.4	3.3	3.5	3.5	3.4	3.5	3.5	3.4	
	85 [29.4]	Total BTUH [kW]	24.5 [7.2]	24.2 [7.1]	22.9 [6.7]	21.7 [6.4]	21.5 [6.3]	20.3 [6.0]	21.4 [6.3]	21.1 [6.2]	20.0 [5.9]	
		Sens BTUH [kW]	-0.2 [-0.1]	-0.2 [0.0]	-0.1 [0.0]	2.4 [0.7]	2.3 [0.7]	2.0 [0.6]	4.8 [1.4]	4.7 [1.4]	4.0 [1.2]	
		Power	3.6	3.6	3.5	3.7	3.6	3.6	3.6	3.6	3.5	
	90 [32.2]	Total BTUH [kW]	22.2 [6.5]	22.0 [6.4]	20.8 [6.1]	19.5 [5.7]	19.3 [5.6]	18.2 [5.3]	19.1 [5.6]	18.9 [5.5]	17.9 [5.3]	
		Sens BTUH [kW]	-1.3 [-0.4]	-1.3 [-0.4]	-1.1 [-0.3]	1.2 [0.3]	1.1 [0.3]	1.0 [0.3]	3.6 [1.1]	3.5 [1.0]	3.0 [0.9]	
		Power	3.8	3.7	3.6	3.8	3.8	3.7	3.8	3.8	3.7	

GROSS SYSTEMS PERFORMANCE DATA (HIGH REHEAT MODE)—(-)GEDZS090

ENTERING INDOOR AIR @ 75°F [23.9°C] dbE ①												
wbE			65.3°F [18.5°C]			64°F [17.8°C]			62.5°F [16.9°C]			
CFM [L/s]			3600 [1699]	2900 [1369]	2400 [1133]	3600 [1699]	2900 [1369]	2400 [1133]	3600 [1699]	2900 [1369]	2400 [1133]	
OUTDOOR DRY BULB TEMPERATURE °F [°C]	60 [15.6]	Total BTUH [kW]	41.7 [12.2]	39.9 [11.7]	38.7 [11.3]	40.1 [11.8]	38.4 [11.3]	37.2 [10.9]	40.0 [11.7]	38.3 [11.2]	37.1 [10.9]	
		Sens BTUH [kW]	8.9 [2.6]	8.0 [2.4]	7.4 [2.2]	12.8 [3.7]	11.5 [3.4]	10.5 [3.1]	18.5 [5.4]	16.7 [4.9]	15.3 [4.5]	
		Power	5.0	4.9	4.8	4.9	4.8	4.8	4.9	4.8	4.8	
	70 [21.1]	Total BTUH [kW]	39.8 [11.7]	38.1 [11.2]	36.9 [10.8]	38.3 [11.2]	36.7 [10.7]	35.5 [10.4]	38.1 [11.2]	36.5 [10.7]	35.4 [10.4]	
		Sens BTUH [kW]	5.9 [1.7]	5.3 [1.6]	4.9 [1.4]	9.8 [2.9]	8.8 [2.6]	8.1 [2.4]	15.5 [4.6]	14.0 [4.1]	12.8 [3.8]	
		Power	5.1	5.0	4.9	5.1	5.0	4.9	5.0	4.9	4.9	
	80 [26.7]	Total BTUH [kW]	36.7 [10.7]	35.1 [10.3]	34.0 [10.0]	35.1 [10.3]	33.7 [9.9]	32.6 [9.6]	35.0 [10.3]	33.5 [9.8]	32.5 [9.5]	
		Sens BTUH [kW]	2.1 [0.6]	1.9 [0.5]	1.7 [0.5]	5.9 [1.7]	5.3 [1.6]	4.9 [1.4]	11.7 [3.4]	10.5 [3.1]	9.6 [2.8]	
		Power	5.4	5.3	5.2	5.3	5.2	5.1	5.3	5.2	5.1	
	90 [32.2]	Total BTUH [kW]	32.3 [9.5]	30.9 [9.1]	30.0 [8.8]	30.8 [9.0]	29.5 [8.6]	28.5 [8.4]	30.6 [9.0]	29.3 [8.6]	28.4 [8.3]	
		Sens BTUH [kW]	-2.7 [-0.8]	-2.4 [-0.7]	-2.2 [-0.6]	1.2 [0.3]	1.0 [0.3]	1.0 [0.3]	6.9 [2.0]	6.2 [1.8]	5.7 [1.7]	
		Power	5.8	5.6	5.6	5.7	5.6	5.5	5.7	5.6	5.5	
	100 [37.8]	Total BTUH [kW]	26.7 [7.8]	25.5 [7.5]	24.7 [7.3]	25.1 [7.4]	24.1 [7.1]	23.3 [6.8]	25.0 [7.3]	23.9 [7.0]	23.2 [6.8]	
		Sens BTUH [kW]	-8.3 [-2.4]	-7.4 [-2.2]	-6.8 [-2.0]	-4.4 [-1.3]	-4.0 [-1.2]	-3.7 [-1.1]	1.3 [0.4]	1.2 [0.4]	1.1 [0.3]	
		Power	6.3	6.2	6.1	6.2	6.1	6.0	6.2	6.1	6.0	
	110 [43.3]	Total BTUH [kW]	19.8 [5.8]	19.0 [5.6]	18.4 [5.4]	18.3 [5.4]	17.5 [5.1]	17.0 [5.0]	18.1 [5.3]	17.4 [5.1]	16.8 [4.9]	
		Sens BTUH [kW]	-14.7 [-4.3]	-13.2 [-3.9]	-12.2 [-3.6]	-10.9 [-3.2]	-9.8 [-2.9]	-9.0 [-2.6]	-5.1 [-1.5]	-4.6 [-1.4]	-4.2 [-1.2]	
		Power	6.9	6.8	6.7	6.9	6.7	6.6	6.9	6.7	6.6	
	120 [48.9]	Total BTUH [kW]	11.7 [3.4]	11.2 [3.3]	10.8 [3.2]	10.1 [3.0]	9.7 [2.8]	9.4 [2.8]	10.0 [2.9]	9.6 [2.8]	9.3 [2.7]	
		Sens BTUH [kW]	-22.1 [-6.5]	-19.8 [-5.8]	-18.2 [-5.3]	-18.2 [-5.3]	-16.4 [-4.8]	-15.1 [-4.4]	-12.5 [-3.7]	-11.2 [-3.3]	-10.3 [-3.0]	
		Power	7.8	7.6	7.5	7.7	7.5	7.4	7.7	7.5	7.4	

P. APPENDICES

Appendix D – Reheat Data for (-)GEDZS 8.5 Ton

GROSS SYSTEMS PERFORMANCE DATA (LOW REHEAT MODE)–(-)GEDZS102

ENTERING INDOOR AIR @ 75°F [23.9°C] dbE ①												
wbE			65.3°F [18.5°C]			64°F [17.8°C]			62.5°F [16.9°C]			
CFM [L/s]			2100 [991]	1700 [802]	1400 [661]	2100 [991]	1700 [802]	1400 [661]	2100 [991]	1700 [802]	1400 [661]	
OUTDOOR DRY BULB TEMPERATURE °F [°C]	60 [15.6]	Total BTUH [kW]	36.6 [10.7]	35.1 [10.3]	33.9 [9.9]	34.5 [10.1]	33.1 [9.7]	32.1 [9.4]	31.9 [9.3]	30.6 [9.0]	29.6 [8.7]	
		Sens BTUH [kW]	7.1 [2.1]	6.4 [1.9]	5.9 [1.7]	9.0 [2.6]	8.1 [2.4]	7.4 [2.2]	10.7 [3.1]	9.7 [2.8]	8.9 [2.6]	
		Power	3.9	3.8	3.7	3.8	3.8	3.7	3.8	3.8	3.7	
	65 [18.3]	Total BTUH [kW]	35.5 [10.4]	34.0 [10.0]	32.9 [9.6]	33.4 [9.8]	32.1 [9.4]	31.0 [9.1]	30.8 [9.0]	29.5 [8.6]	28.6 [8.4]	
		Sens BTUH [kW]	6.1 [1.8]	5.5 [1.6]	5.0 [1.5]	8.0 [2.3]	7.2 [2.1]	6.6 [1.9]	9.7 [2.8]	8.7 [2.6]	8.0 [2.4]	
		Power	3.9	3.8	3.8	3.9	3.8	3.8	3.9	3.8	3.8	
	70 [21.1]	Total BTUH [kW]	34.1 [10.0]	32.7 [9.6]	31.7 [9.3]	32.1 [9.4]	30.8 [9.0]	29.8 [8.7]	29.5 [8.6]	28.3 [8.3]	27.4 [8.0]	
		Sens BTUH [kW]	4.8 [1.4]	4.3 [1.3]	4.0 [1.2]	6.7 [2.0]	6.0 [1.8]	5.5 [1.6]	8.5 [2.5]	7.6 [2.2]	7.0 [2.0]	
		Power	4.0	3.9	3.9	4.0	3.9	3.9	4.0	3.9	3.9	
	75 [23.9]	Total BTUH [kW]	32.7 [9.6]	31.3 [9.2]	30.3 [8.9]	30.6 [9.0]	29.4 [8.6]	28.4 [8.3]	28.0 [8.2]	26.8 [7.9]	26.0 [7.6]	
		Sens BTUH [kW]	3.3 [1.0]	3.0 [0.9]	2.8 [0.8]	5.2 [1.5]	4.7 [1.4]	4.3 [1.3]	7.0 [2.0]	6.3 [1.8]	5.8 [1.7]	
		Power	4.1	4.0	4.0	4.1	4.0	4.0	4.1	4.0	4.0	
	80 [26.7]	Total BTUH [kW]	31.0 [9.1]	29.7 [8.7]	28.8 [8.4]	29.0 [8.5]	27.8 [8.1]	26.9 [7.9]	26.3 [7.7]	25.2 [7.4]	24.4 [7.2]	
		Sens BTUH [kW]	1.7 [0.5]	1.5 [0.4]	1.4 [0.4]	3.6 [1.0]	3.2 [0.9]	2.9 [0.9]	5.3 [1.6]	4.8 [1.4]	4.4 [1.3]	
		Power	4.3	4.2	4.1	4.3	4.2	4.1	4.3	4.2	4.1	
	85 [29.4]	Total BTUH [kW]	29.1 [8.5]	27.9 [8.2]	27.0 [7.9]	27.1 [7.9]	26.0 [7.6]	25.1 [7.4]	24.4 [7.2]	23.4 [6.9]	22.7 [6.6]	
		Sens BTUH [kW]	-0.2 [-0.1]	-0.2 [-0.1]	-0.2 [-0.1]	1.7 [0.5]	1.5 [0.4]	1.4 [0.4]	3.4 [1.0]	3.1 [0.9]	2.8 [0.8]	
		Power	4.4	4.3	4.3	4.4	4.3	4.3	4.4	4.3	4.3	
	90 [32.2]	Total BTUH [kW]	27.1 [7.9]	26.0 [7.6]	25.1 [7.4]	25.0 [7.3]	24.0 [7.0]	23.2 [6.8]	22.4 [6.6]	21.5 [6.3]	20.8 [6.1]	
		Sens BTUH [kW]	-2.3 [-0.7]	-2.1 [-0.6]	-1.9 [-0.6]	-0.4 [-0.1]	-0.4 [-0.1]	-0.4 [-0.1]	1.3 [0.4]	1.2 [0.3]	1.1 [0.3]	
		Power	4.6	4.5	4.4	4.6	4.5	4.4	4.6	4.5	4.4	

GROSS SYSTEMS PERFORMANCE DATA (HIGH REHEAT MODE)—(-)GEDZS102

ENTERING INDOOR AIR @ 75°F [23.9°C] dbE ①												
wbE			65.3°F [18.5°C]			64°F [17.8°C]			62.5°F [16.9°C]			
CFM [L/s]			4100 [1935]	2900 [1369]	2700 [1274]	4100 [1935]	2900 [1369]	2700 [1274]	4100 [1935]	2900 [1369]	2700 [1274]	
OUTDOOR DRY BULB TEMPERATURE °F [°C]	60 [15.6]	Total BTUH [kW]	57.6 [16.9]	53.6 [15.7]	52.9 [15.5]	45.7 [13.4]	42.5 [12.5]	42.0 [12.3]	51.3 [15.0]	47.7 [14.0]	47.1 [13.8]	
		Sens BTUH [kW]	12.7 [3.7]	10.7 [3.1]	10.3 [3.0]	14.6 [4.3]	12.2 [3.6]	11.8 [3.5]	20.5 [6.0]	17.2 [5.0]	16.6 [4.9]	
		Power	6.6	6.4	6.3	5.2	5.0	5.0	6.3	6.1	6.0	
	70 [21.1]	Total BTUH [kW]	52.7 [15.5]	49.1 [14.4]	48.4 [14.2]	40.9 [12.0]	38.0 [11.1]	37.5 [11.0]	46.4 [13.6]	43.2 [12.7]	42.6 [12.5]	
		Sens BTUH [kW]	10.1 [3.0]	8.5 [2.5]	8.2 [2.4]	11.9 [3.5]	10.0 [2.9]	9.7 [2.8]	17.9 [5.2]	15.0 [4.4]	14.5 [4.2]	
		Power	6.4	6.1	6.1	5.0	4.8	4.8	6.0	5.8	5.8	
	80 [26.7]	Total BTUH [kW]	46.3 [13.6]	43.1 [12.6]	42.6 [12.5]	34.5 [10.1]	32.1 [9.4]	31.6 [9.3]	40.0 [11.7]	37.2 [10.9]	36.7 [10.8]	
		Sens BTUH [kW]	5.6 [1.6]	4.7 [1.4]	4.5 [1.3]	7.4 [2.2]	6.2 [1.8]	6.0 [1.8]	13.3 [3.9]	11.2 [3.3]	10.8 [3.2]	
		Power	6.4	6.1	6.1	5.0	4.8	4.8	6.1	5.8	5.8	
	90 [32.2]	Total BTUH [kW]	38.4 [11.2]	35.7 [10.5]	35.2 [10.3]	26.5 [7.8]	24.7 [7.2]	24.3 [7.1]	32.1 [9.4]	29.8 [8.7]	29.4 [8.6]	
		Sens BTUH [kW]	-0.9 [-0.3]	-0.7 [-0.2]	-0.7 [-0.2]	0.9 [0.3]	0.8 [0.2]	0.8 [0.2]	6.9 [2.0]	5.8 [1.7]	5.6 [1.6]	
		Power	6.6	6.4	6.4	5.2	5.1	5.0	6.3	6.1	6.1	
	100 [37.8]	Total BTUH [kW]	28.9 [8.5]	26.9 [7.9]	26.5 [7.8]	17.0 [5.0]	15.8 [4.6]	15.6 [4.6]	22.6 [6.6]	21.0 [6.1]	20.7 [6.1]	
		Sens BTUH [kW]	-9.2 [-2.7]	-7.7 [-2.3]	-7.5 [-2.2]	-7.4 [-2.2]	-6.2 [-1.8]	-6.0 [-1.8]	-1.5 [-0.4]	-1.2 [-0.4]	-1.2 [-0.4]	
		Power	7.2	6.9	6.9	5.8	5.6	5.5	6.8	6.6	6.6	
	110 [43.3]	Total BTUH [kW]	17.9 [5.2]	16.6 [4.9]	16.4 [4.8]	6.0 [1.8]	5.6 [1.6]	5.5 [1.6]	11.5 [3.4]	10.7 [3.1]	10.6 [3.1]	
		Sens BTUH [kW]	-19.5 [-5.7]	-16.3 [-4.8]	-15.8 [-4.6]	-17.7 [-5.2]	-14.8 [-4.3]	-14.3 [-4.2]	-11.7 [-3.4]	-9.8 [-2.9]	-9.5 [-2.8]	
		Power	7.9	7.7	7.6	6.5	6.3	6.3	7.6	7.4	7.3	
	120 [48.9]	Total BTUH [kW]	5.3 [1.5]	4.9 [1.4]	4.9 [1.4]	-6.6 [-1.9]	-6.1 [-1.8]	-6.0 [-1.8]	-1.0 [-0.3]	-1.0 [-0.3]	-1.0 [-0.3]	
		Sens BTUH [kW]	-31.6 [-9.3]	-26.5 [-7.8]	-25.7 [-7.5]	-29.8 [-8.7]	-25.0 [-7.3]	-24.2 [-7.1]	-23.9 [-7.0]	-20.0 [-5.9]	-19.4 [-5.7]	
		Power	9.0	8.7	8.6	7.6	7.3	7.3	8.7	8.4	8.3	

Appendix D – Reheat Data for (-)GEDZS 10 Ton

GROSS SYSTEMS PERFORMANCE DATA (LOW REHEAT MODE)—(-)GEDZS120

ENTERING INDOOR AIR @ 75°F [23.9°C] dbE ①												
wbE			65.3°F [18.5°C]			64°F [17.8°C]			62.5°F [16.9°C]			
CFM [L/s]			3000 [1416]	2400 [1133]	2000 [944]	3000 [1416]	2400 [1133]	2000 [944]	3000 [1416]	2400 [1133]	2000 [944]	
OUTDOOR DRY BULB TEMPERATURE °F [°C]	60 [15.6]	Total BTUH [kW]	46.5 [13.6]	44.4 [13.0]	43.1 [12.6]	43.1 [12.6]	41.2 [12.1]	40.0 [11.7]	40.3 [11.8]	38.6 [11.3]	37.4 [11.0]	
		Sens BTUH [kW]	12.9 [3.8]	11.6 [3.4]	10.7 [3.1]	13.8 [4.0]	12.3 [3.6]	11.4 [3.3]	18.5 [5.4]	16.5 [4.8]	15.3 [4.5]	
		Power	4.6	4.5	4.4	4.5	4.4	4.3	4.5	4.4	4.3	
	65 [18.3]	Total BTUH [kW]	45.7 [13.4]	43.7 [12.8]	42.4 [12.4]	42.3 [12.4]	40.5 [11.9]	39.3 [11.5]	39.6 [11.6]	37.8 [11.1]	36.7 [10.8]	
		Sens BTUH [kW]	10.5 [3.1]	9.4 [2.8]	8.7 [2.5]	11.4 [3.3]	10.2 [3.0]	9.4 [2.8]	16.1 [4.7]	14.4 [4.2]	13.3 [3.9]	
		Power	4.6	4.5	4.5	4.6	4.5	4.4	4.5	4.4	4.4	
	70 [21.1]	Total BTUH [kW]	44.7 [13.1]	42.7 [12.5]	41.4 [12.1]	41.3 [12.1]	39.5 [11.6]	38.3 [11.2]	38.5 [11.3]	36.9 [10.8]	35.7 [10.5]	
		Sens BTUH [kW]	8.3 [2.4]	7.4 [2.2]	6.9 [2.0]	9.2 [2.7]	8.2 [2.4]	7.6 [2.2]	13.9 [4.1]	12.4 [3.6]	11.4 [3.4]	
		Power	4.7	4.6	4.6	4.7	4.6	4.5	4.6	4.5	4.5	
	75 [23.9]	Total BTUH [kW]	43.4 [12.7]	41.5 [12.2]	40.2 [11.8]	40.0 [11.7]	38.3 [11.2]	37.1 [10.9]	37.2 [10.9]	35.6 [10.4]	34.5 [10.1]	
		Sens BTUH [kW]	6.3 [1.8]	5.6 [1.7]	5.2 [1.5]	7.2 [2.1]	6.4 [1.9]	5.9 [1.7]	11.9 [3.5]	10.6 [3.1]	9.8 [2.9]	
		Power	4.9	4.8	4.7	4.8	4.7	4.7	4.8	4.7	4.6	
	80 [26.7]	Total BTUH [kW]	41.8 [12.2]	40.0 [11.7]	38.8 [11.4]	38.4 [11.3]	36.8 [10.8]	35.6 [10.4]	35.7 [10.5]	34.1 [10.0]	33.1 [9.7]	
		Sens BTUH [kW]	4.5 [1.3]	4.0 [1.2]	3.7 [1.1]	5.4 [1.6]	4.8 [1.4]	4.4 [1.3]	10.1 [2.9]	9.0 [2.6]	8.3 [2.4]	
		Power	5.1	5	4.9	5	4.9	4.9	5	4.9	4.8	
	85 [29.4]	Total BTUH [kW]	40.0 [11.7]	38.2 [11.2]	37.1 [10.9]	36.6 [10.7]	35.0 [10.3]	33.9 [9.9]	33.8 [9.9]	32.4 [9.5]	31.4 [9.2]	
		Sens BTUH [kW]	2.9 [0.8]	2.6 [0.8]	2.4 [0.7]	3.8 [1.1]	3.4 [1.0]	3.1 [0.9]	8.5 [2.5]	7.6 [2.2]	7.0 [2.0]	
		Power	5.4	5.3	5.2	5.3	5.2	5.1	5.3	5.2	5.1	
	90 [32.2]	Total BTUH [kW]	37.9 [11.1]	36.2 [10.6]	35.1 [10.3]	34.5 [10.1]	33.0 [9.7]	32.0 [9.4]	31.7 [9.3]	30.4 [8.9]	29.4 [8.6]	
		Sens BTUH [kW]	1.5 [0.4]	1.3 [0.4]	1.2 [0.4]	2.4 [0.7]	2.1 [0.6]	2.0 [0.6]	7.1 [2.1]	6.3 [1.9]	5.8 [1.7]	
		Power	5.7	5.6	5.5	5.6	5.5	5.4	5.6	5.5	5.4	

GROSS SYSTEMS PERFORMANCE DATA (HIGH REHEAT MODE)—(-)GEDZS120

ENTERING INDOOR AIR @ 75°F [23.9°C] dbE ①												
wbE			65.3°F [18.5°C]			64°F [17.8°C]			62.5°F [16.9°C]			
CFM [L/s]			4800 [2265]	3800 [1793]	3200 [1510]	4800 [2265]	3800 [1793]	3200 [1510]	4800 [2265]	3800 [1793]	3200 [1510]	
OUTDOOR DRY BULB TEMPERATURE °F [°C]	60 [15.6]	Total BTUH [kW]	58.1 [17.0]	55.4 [16.2]	53.9 [15.8]	55.5 [16.3]	53.0 [15.5]	51.4 [15.1]	53.1 [15.6]	50.7 [14.9]	49.2 [14.4]	
		Sens BTUH [kW]	10.5 [3.1]	9.3 [2.7]	8.6 [2.5]	15.6 [4.6]	13.9 [4.1]	12.9 [3.8]	19.9 [5.8]	17.7 [5.2]	16.4 [4.8]	
		Power	7.0	6.9	6.8	6.9	6.8	6.7	6.9	6.8	6.7	
	70 [21.1]	Total BTUH [kW]	53.4 [15.7]	51.0 [14.9]	49.5 [14.5]	50.8 [14.9]	48.5 [14.2]	47.1 [13.8]	48.4 [14.2]	46.2 [13.5]	44.9 [13.2]	
		Sens BTUH [kW]	8.3 [2.4]	7.4 [2.2]	6.8 [2.0]	13.4 [3.9]	12.0 [3.5]	11.1 [3.2]	17.7 [5.2]	15.8 [4.6]	14.6 [4.3]	
		Power	7.1	7.0	6.9	7.0	6.9	6.8	7.0	6.9	6.8	
	80 [26.7]	Total BTUH [kW]	48.4 [14.2]	46.2 [13.5]	44.9 [13.2]	45.8 [13.4]	43.7 [12.8]	42.5 [12.4]	43.4 [12.7]	41.5 [12.1]	40.3 [11.8]	
		Sens BTUH [kW]	4.5 [1.3]	4.0 [1.2]	3.7 [1.1]	9.7 [2.8]	8.6 [2.5]	8.0 [2.3]	14.0 [4.1]	12.5 [3.6]	11.5 [3.4]	
		Power	7.4	7.3	7.2	7.3	7.2	7.1	7.3	7.2	7.1	
	90 [32.2]	Total BTUH [kW]	43.1 [12.6]	41.1 [12.0]	39.9 [11.7]	40.5 [11.9]	38.6 [11.3]	37.5 [11.0]	38.1 [11.2]	36.3 [10.6]	35.3 [10.3]	
		Sens BTUH [kW]	-0.8 [-0.2]	-0.7 [-0.2]	-0.6 [-0.2]	4.4 [1.3]	3.9 [1.1]	3.6 [1.1]	8.7 [2.5]	7.7 [2.3]	7.2 [2.1]	
		Power	7.9	7.7	7.6	7.8	7.7	7.5	7.8	7.6	7.5	
	100 [37.8]	Total BTUH [kW]	37.4 [11.0]	35.7 [10.5]	34.6 [10.2]	34.8 [10.2]	33.2 [9.7]	32.2 [9.4]	32.4 [9.5]	30.9 [9.1]	30.0 [8.8]	
		Sens BTUH [kW]	-7.6 [-2.2]	-6.8 [-2.0]	-6.3 [-1.8]	-2.5 [-0.7]	-2.2 [-0.6]	-2.0 [-0.6]	1.8 [0.5]	1.6 [0.5]	1.5 [0.4]	
		Power	8.6	8.4	8.3	8.5	8.3	8.2	8.5	8.3	8.2	
	110 [43.3]	Total BTUH [kW]	31.3 [9.2]	29.9 [8.8]	29.0 [8.5]	28.7 [8.4]	27.4 [8.0]	26.6 [7.8]	26.3 [7.7]	25.1 [7.4]	24.4 [7.1]	
		Sens BTUH [kW]	-16.0 [-4.7]	-14.3 [-4.2]	-13.2 [-3.9]	-10.9 [-3.2]	-9.7 [-2.8]	-9.0 [-2.6]	-6.6 [-1.9]	-5.9 [-1.7]	-5.5 [-1.6]	
		Power	9.5	9.3	9.2	9.4	9.2	9.1	9.4	9.2	9.0	
	120 [48.9]	Total BTUH [kW]	24.9 [7.3]	23.8 [7.0]	23.1 [6.8]	22.3 [6.5]	21.3 [6.2]	20.7 [6.1]	19.9 [5.8]	19.0 [5.6]	18.5 [5.4]	
		Sens BTUH [kW]	-26.0 [-7.6]	-23.2 [-6.8]	-21.5 [-6.3]	-20.9 [-6.1]	-18.6 [-5.5]	-17.2 [-5.0]	-16.6 [-4.9]	-14.8 [-4.3]	-13.7 [-4.0]	
		Power	10.6	10.3	10.2	10.5	10.2	10.1	10.5	10.2	10.1	

P. APPENDICES

Appendix D – Reheat Data for (-)GEDZS 12.5 Ton

GROSS SYSTEMS PERFORMANCE DATA (LOW REHEAT MODE)—(-)GEDZS150

ENTERING INDOOR AIR @ 75°F [23.9°C] dbE ①											
wbE			65.3°F [18.5°C]			64°F [17.8°C]			62.5°F [16.9°C]		
CFM [L/s]			3000 [1416]	2400 [1133]	2000 [944]	3000 [1416]	2400 [1133]	2000 [944]	3000 [1416]	2400 [1133]	2000 [944]
OUTDOOR DRY BULB TEMPERATURE °F [°C]	60 [15.6]	Total BTUH [kW]	46.5 [13.6]	44.4 [13.0]	43.1 [12.6]	43.1 [12.6]	41.2 [12.1]	40.0 [11.7]	40.3 [11.8]	38.6 [11.3]	37.4 [11.0]
		Sens BTUH [kW]	12.9 [3.8]	11.6 [3.4]	10.7 [3.1]	13.8 [4.0]	12.3 [3.6]	11.4 [3.3]	18.5 [5.4]	16.5 [4.8]	15.3 [4.5]
		Power	4.6	4.5	4.4	4.5	4.4	4.3	4.5	4.4	4.3
	65 [18.3]	Total BTUH [kW]	45.7 [13.4]	43.7 [12.8]	42.4 [12.4]	42.3 [12.4]	40.5 [11.9]	39.3 [11.5]	39.6 [11.6]	37.8 [11.1]	36.7 [10.8]
		Sens BTUH [kW]	10.5 [3.1]	9.4 [2.8]	8.7 [2.5]	11.4 [3.3]	10.2 [3.0]	9.4 [2.8]	16.1 [4.7]	14.4 [4.2]	13.3 [3.9]
		Power	4.6	4.5	4.5	4.6	4.5	4.4	4.5	4.4	4.4
	70 [21.1]	Total BTUH [kW]	44.7 [13.1]	42.7 [12.5]	41.4 [12.1]	41.3 [12.1]	39.5 [11.6]	38.3 [11.2]	38.5 [11.3]	36.9 [10.8]	35.7 [10.5]
		Sens BTUH [kW]	8.3 [2.4]	7.4 [2.2]	6.9 [2.0]	9.2 [2.7]	8.2 [2.4]	7.6 [2.2]	13.9 [4.1]	12.4 [3.6]	11.4 [3.4]
		Power	4.7	4.6	4.6	4.7	4.6	4.5	4.6	4.5	4.5
	75 [23.9]	Total BTUH [kW]	43.4 [12.7]	41.5 [12.2]	40.2 [11.8]	40.0 [11.7]	38.3 [11.2]	37.1 [10.9]	37.2 [10.9]	35.6 [10.4]	34.5 [10.1]
		Sens BTUH [kW]	6.3 [1.8]	5.6 [1.7]	5.2 [1.5]	7.2 [2.1]	6.4 [1.9]	5.9 [1.7]	11.9 [3.5]	10.6 [3.1]	9.8 [2.9]
		Power	4.9	4.8	4.7	4.8	4.7	4.7	4.8	4.7	4.6
	80 [26.7]	Total BTUH [kW]	41.8 [12.2]	40.0 [11.7]	38.8 [11.4]	38.4 [11.3]	36.8 [10.8]	35.6 [10.4]	35.7 [10.5]	34.1 [10.0]	33.1 [9.7]
		Sens BTUH [kW]	4.5 [1.3]	4.0 [1.2]	3.7 [1.1]	5.4 [1.6]	4.8 [1.4]	4.4 [1.3]	10.1 [2.9]	9.0 [2.6]	8.3 [2.4]
		Power	5.1	5	4.9	5	4.9	4.9	5	4.9	4.8
	85 [29.4]	Total BTUH [kW]	40.0 [11.7]	38.2 [11.2]	37.1 [10.9]	36.6 [10.7]	35.0 [10.3]	33.9 [9.9]	33.8 [9.9]	32.4 [9.5]	31.4 [9.2]
		Sens BTUH [kW]	2.9 [0.8]	2.6 [0.8]	2.4 [0.7]	3.8 [1.1]	3.4 [1.0]	3.1 [0.9]	8.5 [2.5]	7.6 [2.2]	7.0 [2.0]
		Power	5.4	5.3	5.2	5.3	5.2	5.1	5.3	5.2	5.1
	90 [32.2]	Total BTUH [kW]	37.9 [11.1]	36.2 [10.6]	35.1 [10.3]	34.5 [10.1]	33.0 [9.7]	32.0 [9.4]	31.7 [9.3]	30.4 [8.9]	29.4 [8.6]
		Sens BTUH [kW]	1.5 [0.4]	1.3 [0.4]	1.2 [0.4]	2.4 [0.7]	2.1 [0.6]	2.0 [0.6]	7.1 [2.1]	6.3 [1.9]	5.8 [1.7]
		Power	5.7	5.6	5.5	5.6	5.5	5.4	5.6	5.5	5.4

GROSS SYSTEMS PERFORMANCE DATA (HIGH REHEAT MODE)—(-)GEDZS150

ENTERING INDOOR AIR @ 75°F [23.9°C] dbE ①											
wbE			65.3°F [18.5°C]			64°F [17.8°C]			62.5°F [16.9°C]		
CFM [L/s]			6000 [2832]	4100 [1935]	4000 [1888]	6000 [2832]	4100 [1935]	4000 [1888]	6000 [2832]	4100 [1935]	4000 [1888]
OUTDOOR DRY BULB TEMPERATURE °F [°C]	60ºF [15.6]	Total BTUH [kW]	99.3 [29.1]	91.5 [26.8]	91.1 [26.7]	101.6 [29.8]	93.7 [27.4]	93.2 [27.3]	92.7 [27.2]	85.5 [25.1]	85.2 [25.0]
		Sens BTUH [kW]	33.3 [9.7]	27.4 [8.0]	27.0 [7.9]	40.1 [11.8]	33.0 [9.7]	32.6 [9.6]	46.4 [13.6]	38.1 [11.2]	37.7 [11.0]
		Power	9.5	9.1	9.1	9.3	8.9	8.9	9.3	8.9	8.9
	70ºF [21.1]	Total BTUH [kW]	94.4 [27.7]	87.1 [25.5]	86.7 [25.4]	96.7 [28.3]	89.2 [26.1]	88.8 [26.0]	87.9 [25.8]	81.1 [23.8]	80.7 [23.7]
		Sens BTUH [kW]	27 [7.9]	22.2 [6.5]	21.9 [6.4]	33.9 [9.9]	27.9 [8.2]	27.5 [8.1]	40.1 [11.7]	33.0 [9.7]	32.6 [9.5]
		Power	9.7	9.3	9.3	9.5	9.2	9.2	9.5	9.2	9.1
	80ºF [26.7]	Total BTUH [kW]	87.6 [25.7]	80.8 [23.7]	80.4 [23.6]	89.9 [26.3]	82.9 [24.3]	82.5 [24.2]	81.1 [23.8]	74.8 [21.9]	74.4 [21.8]
		Sens BTUH [kW]	20.1 [5.9]	16.5 [4.8]	16.3 [4.8]	27.0 [7.9]	22.2 [6.5]	21.9 [6.4]	33.2 [9.7]	27.3 [8.0]	27.0 [7.9]
		Power	10.2	9.8	9.8	10	9.6	9.6	10	9.6	9.6
	90ºF [32.2]	Total BTUH [kW]	78.7 [23.1]	72.6 [21.3]	72.3 [21.2]	81.0 [23.7]	74.7 [21.9]	74.4 [21.8]	72.2 [21.2]	66.6 [19.5]	66.3 [19.4]
		Sens BTUH [kW]	12.5 [3.7]	10.3 [3.0]	10.2 [3.0]	19.4 [5.7]	15.9 [4.7]	15.8 [4.6]	25.6 [7.5]	21.0 [6.2]	20.8 [6.1]
		Power	11	10.5	10.5	10.8	10.4	10.3	10.8	10.3	10.3
	100ºF [37.8]	Total BTUH [kW]	67.8 [19.9]	62.5 [18.3]	62.3 [18.2]	70.1 [20.5]	64.7 [18.9]	64.4 [18.9]	61.3 [18.0]	56.5 [16.6]	56.3 [16.5]
		Sens BTUH [kW]	4.3 [1.3]	3.5 [1.0]	3.5 [1.0]	11.2 [3.3]	9.2 [2.7]	9.1 [2.7]	17.4 [5.1]	14.3 [4.2]	14.1 [4.1]
		Power	11.9	11.5	11.4	11.8	11.3	11.3	11.8	11.3	11.3
	110 [43.3]	Total BTUH [kW]	54.9 [16.1]	50.6 [14.8]	50.4 [14.8]	57.2 [16.8]	52.7 [15.5]	52.5 [15.4]	48.4 [14.2]	44.6 [13.1]	44.4 [13.0]
		Sens BTUH [kW]	-4.6 [-1.3]	-3.8 [-1.1]	-3.7 [-1.1]	2.3 [0.7]	1.9 [0.5]	1.9 [0.5]	8.5 [2.5]	7.0 [2.0]	6.9 [2.0]
		Power	13.2	12.6	12.6	13	12.5	12.4	13	12.5	12.4
	120 [48.9]	Total BTUH [kW]	40.0 [11.7]	36.8 [10.8]	36.7 [10.8]	42.3 [12.4]	39.0 [11.4]	38.8 [11.4]	33.4 [9.8]	30.8 [0.9]	30.7 [9.0]
		Sens BTUH [kW]	-14.1 [-4.1]	-11.6 [-3.4]	-11.5 [-3.4]	-7.2 [-2.1]	-6.0 [-1.7]	-5.9 [-1.7]	-1.0 [-0.3]	-0.9 [-0.2]	-0.8 [-0.2]
		Power	14.6	14.1	14	14.5	13.9	13.9	14.4	13.9	13.8

Appendix D – Reheat Data for (-)GEDZT 7.5 Ton

GROSS SYSTEMS PERFORMANCE DATA (LOW REHEAT MODE)—(-)GEDZT090

ENTERING INDOOR AIR @ 75°F [23.9°C] dbE ①												
wbE			65.3°F [18.5°C]			64°F [17.8°C]			62.5°F [16.9°C]			
CFM [L/s]			1800 [850]	1700 [802]	1200 [566]	1800 [850]	1700 [802]	1200 [566]	1800 [850]	1700 [802]	1200 [566]	
OUTDOOR DRY BULB TEMPERATURE °F [°C]	60 [15.6]	Total BTUH [kW]	29.7 [8.7]	29.4 [8.6]	27.9 [8.2]	27.0 [7.9]	26.7 [7.8]	25.3 [7.4]	26.6 [7.8]	26.4 [7.7]	24.9 [7.3]	
		Sens BTUH [kW]	6.5 [1.9]	6.3 [1.8]	5.4 [1.6]	9.0 [2.6]	8.7 [2.6]	7.5 [2.2]	11.4 [3.4]	11.1 [3.3]	9.6 [2.8]	
		Power	3.2	3.1	3.1	3.2	3.2	3.1	3.2	3.2	3.1	
	65 [18.3]	Total BTUH [kW]	29.5 [8.6]	29.2 [8.5]	27.6 [8.1]	26.7 [7.8]	26.4 [7.7]	25.0 [7.3]	26.4 [7.7]	26.1 [7.6]	24.7 [7.2]	
		Sens BTUH [kW]	5.0 [1.5]	4.9 [1.4]	4.2 [1.2]	7.6 [2.2]	7.4 [2.2]	6.3 [1.9]	10.0 [2.9]	9.7 [2.9]	8.4 [2.5]	
		Power	3.2	3.2	3.1	3.3	3.2	3.2	3.2	3.2	3.1	
	70 [21.1]	Total BTUH [kW]	28.8 [8.4]	28.5 [8.4]	27.0 [7.9]	26.0 [7.6]	25.8 [7.6]	24.4 [7.1]	25.7 [7.5]	25.4 [7.5]	24.1 [7.1]	
		Sens BTUH [kW]	3.7 [1.1]	3.6 [1.0]	3.1 [0.9]	6.2 [1.8]	6.0 [1.8]	5.2 [1.5]	8.6 [2.5]	8.4 [2.5]	7.2 [2.1]	
		Power	3.2	3.2	3.1	3.3	3.3	3.2	3.3	3.3	3.2	
	75 [23.9]	Total BTUH [kW]	27.8 [8.1]	27.5 [8.1]	26.0 [7.6]	25.0 [7.3]	24.7 [7.2]	23.4 [6.9]	24.7 [7.2]	24.4 [7.2]	23.1 [6.8]	
		Sens BTUH [kW]	2.3 [0.7]	2.3 [0.7]	2.0 [0.6]	4.9 [1.4]	4.7 [1.4]	4.1 [1.2]	7.3 [2.1]	7.1 [2.1]	6.1 [1.8]	
		Power	3.3	3.3	3.2	3.4	3.4	3.3	3.4	3.4	3.3	
	80 [26.7]	Total BTUH [kW]	26.3 [7.7]	26.0 [7.6]	24.6 [7.2]	23.5 [6.9]	23.3 [6.8]	22.1 [6.5]	23.2 [6.8]	23.0 [6.7]	21.7 [6.4]	
		Sens BTUH [kW]	1.1 [0.3]	1.0 [0.3]	0.9 [0.3]	3.6 [1.0]	3.5 [1.0]	3.0 [0.9]	6.0 [1.8]	5.9 [1.7]	5.1 [1.5]	
		Power	3.4	3.4	3.3	3.5	3.5	3.4	3.5	3.5	3.4	
	85 [29.4]	Total BTUH [kW]	24.5 [7.2]	24.2 [7.1]	22.9 [6.7]	21.7 [6.4]	21.5 [6.3]	20.3 [6.0]	21.4 [6.3]	21.1 [6.2]	20.0 [5.9]	
		Sens BTUH [kW]	-0.2 [-0.1]	-0.2 [0.0]	-0.1 [0.0]	2.4 [0.7]	2.3 [0.7]	2.0 [0.6]	4.8 [1.4]	4.7 [1.4]	4.0 [1.2]	
		Power	3.6	3.6	3.5	3.7	3.6	3.6	3.6	3.6	3.5	
	90 [32.2]	Total BTUH [kW]	22.2 [6.5]	22.0 [6.4]	20.8 [6.1]	19.5 [5.7]	19.3 [5.6]	18.2 [5.3]	19.1 [5.6]	18.9 [5.5]	17.9 [5.3]	
		Sens BTUH [kW]	-1.3 [-0.4]	-1.3 [-0.4]	-1.1 [-0.3]	1.2 [0.3]	1.1 [0.3]	1.0 [0.3]	3.6 [1.1]	3.5 [1.0]	3.0 [0.9]	
		Power	3.8	3.7	3.6	3.8	3.8	3.7	3.8	3.8	3.7	

GROSS SYSTEMS PERFORMANCE DATA (HIGH REHEAT MODE)—(-)GEDZT090

ENTERING INDOOR AIR @ 75°F [23.9°C] dbE ①												
wbE			65.3°F [18.5°C]			64°F [17.8°C]			62.5°F [16.9°C]			
CFM [L/s]			3600 [1699]	2900 [1369]	2400 [1133]	3600 [1699]	2900 [1369]	2400 [1133]	3600 [1699]	2900 [1369]	2400 [1133]	
OUTDOOR DRY BULB TEMPERATURE °F [°C]	60 [15.6]	Total BTUH [kW]	41.7 [12.2]	39.9 [11.7]	38.7 [11.3]	40.1 [11.8]	38.4 [11.3]	37.2 [10.9]	40.0 [11.7]	38.3 [11.2]	37.1 [10.9]	
		Sens BTUH [kW]	8.9 [2.6]	8.0 [2.4]	7.4 [2.2]	12.8 [3.7]	11.5 [3.4]	10.5 [3.1]	18.5 [5.4]	16.7 [4.9]	15.3 [4.5]	
		Power	5.0	4.9	4.8	4.9	4.8	4.8	4.9	4.8	4.8	
	70 [21.1]	Total BTUH [kW]	39.8 [11.7]	38.1 [11.2]	36.9 [10.8]	38.3 [11.2]	36.7 [10.7]	35.5 [10.4]	38.1 [11.2]	36.5 [10.7]	35.4 [10.4]	
		Sens BTUH [kW]	5.9 [1.7]	5.3 [1.6]	4.9 [1.4]	9.8 [2.9]	8.8 [2.6]	8.1 [2.4]	15.5 [4.6]	14.0 [4.1]	12.8 [3.8]	
		Power	5.1	5.0	4.9	5.1	5.0	4.9	5.0	4.9	4.9	
	80 [26.7]	Total BTUH [kW]	36.7 [10.7]	35.1 [10.3]	34.0 [10.0]	35.1 [10.3]	33.7 [9.9]	32.6 [9.6]	35.0 [10.3]	33.5 [9.8]	32.5 [9.5]	
		Sens BTUH [kW]	2.1 [0.6]	1.9 [0.5]	1.7 [0.5]	5.9 [1.7]	5.3 [1.6]	4.9 [1.4]	11.7 [3.4]	10.5 [3.1]	9.6 [2.8]	
		Power	5.4	5.3	5.2	5.3	5.2	5.1	5.3	5.2	5.1	
	90 [32.2]	Total BTUH [kW]	32.3 [9.5]	30.9 [9.1]	30.0 [8.8]	30.8 [9.0]	29.5 [8.6]	28.5 [8.4]	30.6 [9.0]	29.3 [8.6]	28.4 [8.3]	
		Sens BTUH [kW]	-2.7 [-0.8]	-2.4 [-0.7]	-2.2 [-0.6]	1.2 [0.3]	1.0 [0.3]	1.0 [0.3]	6.9 [2.0]	6.2 [1.8]	5.7 [1.7]	
		Power	5.8	5.6	5.6	5.7	5.6	5.5	5.7	5.6	5.5	
	100 [37.8]	Total BTUH [kW]	26.7 [7.8]	25.5 [7.5]	24.7 [7.3]	25.1 [7.4]	24.1 [7.1]	23.3 [6.8]	25.0 [7.3]	23.9 [7.0]	23.2 [6.8]	
		Sens BTUH [kW]	-8.3 [-2.4]	-7.4 [-2.2]	-6.8 [-2.0]	-4.4 [-1.3]	-4.0 [-1.2]	-3.7 [-1.1]	1.3 [0.4]	1.2 [0.4]	1.1 [0.3]	
		Power	6.3	6.2	6.1	6.2	6.1	6.0	6.2	6.1	6.0	
	110 [43.3]	Total BTUH [kW]	19.8 [5.8]	19.0 [5.6]	18.4 [5.4]	18.3 [5.4]	17.5 [5.1]	17.0 [5.0]	18.1 [5.3]	17.4 [5.1]	16.8 [4.9]	
		Sens BTUH [kW]	-14.7 [-4.3]	-13.2 [-3.9]	-12.2 [-3.6]	-10.9 [-3.2]	-9.8 [-2.9]	-9.0 [-2.6]	-5.1 [-1.5]	-4.6 [-1.4]	-4.2 [-1.2]	
		Power	6.9	6.8	6.7	6.9	6.7	6.6	6.9	6.7	6.6	
	120 [48.9]	Total BTUH [kW]	11.7 [3.4]	11.2 [3.3]	10.8 [3.2]	10.1 [3.0]	9.7 [2.8]	9.4 [2.8]	10.0 [2.9]	9.6 [2.8]	9.3 [2.7]	
		Sens BTUH [kW]	-22.1 [-6.5]	-19.8 [-5.8]	-18.2 [-5.3]	-18.2 [-5.3]	-16.4 [-4.8]	-15.1 [-4.4]	-12.5 [-3.7]	-11.2 [-3.3]	-10.3 [-3.0]	
		Power	7.8	7.6	7.5	7.7	7.5	7.4	7.7	7.5	7.4	

P. APPENDICES

Appendix D – Reheat Data for (-)GEDZT 8.5 Ton

GROSS SYSTEMS PERFORMANCE DATA (LOW REHEAT MODE)–(-)GEDZT102

ENTERING INDOOR AIR @ 75°F [23.9°C] dbE ①												
wbE			65.3°F [18.5°C]			64°F [17.8°C]			62.5°F [16.9°C]			
CFM [L/s]			2100 [991]	1700 [802]	1400 [661]	2100 [991]	1700 [802]	1400 [661]	2100 [991]	1700 [802]	1400 [661]	
OUTDOOR DRY BULB TEMPERATURE °F [°C]	60 [15.6]	Total BTUH [kW]	36.6 [10.7]	35.1 [10.3]	33.9 [9.9]	34.5 [10.1]	33.1 [9.7]	32.1 [9.4]	31.9 [9.3]	30.6 [9.0]	29.6 [8.7]	
		Sens BTUH [kW]	7.1 [2.1]	6.4 [1.9]	5.9 [1.7]	9.0 [2.6]	8.1 [2.4]	7.4 [2.2]	10.7 [3.1]	9.7 [2.8]	8.9 [2.6]	
		Power	3.9	3.8	3.7	3.8	3.8	3.7	3.8	3.8	3.7	
	65 [18.3]	Total BTUH [kW]	35.5 [10.4]	34.0 [10.0]	32.9 [9.6]	33.4 [9.8]	32.1 [9.4]	31.0 [9.1]	30.8 [9.0]	29.5 [8.6]	28.6 [8.4]	
		Sens BTUH [kW]	6.1 [1.8]	5.5 [1.6]	5.0 [1.5]	8.0 [2.3]	7.2 [2.1]	6.6 [1.9]	9.7 [2.8]	8.7 [2.6]	8.0 [2.4]	
		Power	3.9	3.8	3.8	3.9	3.8	3.8	3.9	3.8	3.8	
	70 [21.1]	Total BTUH [kW]	34.1 [10.0]	32.7 [9.6]	31.7 [9.3]	32.1 [9.4]	30.8 [9.0]	29.8 [8.7]	29.5 [8.6]	28.3 [8.3]	27.4 [8.0]	
		Sens BTUH [kW]	4.8 [1.4]	4.3 [1.3]	4.0 [1.2]	6.7 [2.0]	6.0 [1.8]	5.5 [1.6]	8.5 [2.5]	7.6 [2.2]	7.0 [2.0]	
		Power	4.0	3.9	3.9	4.0	3.9	3.9	4.0	3.9	3.9	
	75 [23.9]	Total BTUH [kW]	32.7 [9.6]	31.3 [9.2]	30.3 [8.9]	30.6 [9.0]	29.4 [8.6]	28.4 [8.3]	28.0 [8.2]	26.8 [7.9]	26.0 [7.6]	
		Sens BTUH [kW]	3.3 [1.0]	3.0 [0.9]	2.8 [0.8]	5.2 [1.5]	4.7 [1.4]	4.3 [1.3]	7.0 [2.0]	6.3 [1.8]	5.8 [1.7]	
		Power	4.1	4.0	4.0	4.1	4.0	4.0	4.1	4.0	4.0	
	80 [26.7]	Total BTUH [kW]	31.0 [9.1]	29.7 [8.7]	28.8 [8.4]	29.0 [8.5]	27.8 [8.1]	26.9 [7.9]	26.3 [7.7]	25.2 [7.4]	24.4 [7.2]	
		Sens BTUH [kW]	1.7 [0.5]	1.5 [0.4]	1.4 [0.4]	3.6 [1.0]	3.2 [0.9]	2.9 [0.9]	5.3 [1.6]	4.8 [1.4]	4.4 [1.3]	
		Power	4.3	4.2	4.1	4.3	4.2	4.1	4.3	4.2	4.1	
	85 [29.4]	Total BTUH [kW]	29.1 [8.5]	27.9 [8.2]	27.0 [7.9]	27.1 [7.9]	26.0 [7.6]	25.1 [7.4]	24.4 [7.2]	23.4 [6.9]	22.7 [6.6]	
		Sens BTUH [kW]	-0.2 [-0.1]	-0.2 [-0.1]	-0.2 [-0.1]	1.7 [0.5]	1.5 [0.4]	1.4 [0.4]	3.4 [1.0]	3.1 [0.9]	2.8 [0.8]	
		Power	4.4	4.3	4.3	4.4	4.3	4.3	4.4	4.3	4.3	
	90 [32.2]	Total BTUH [kW]	27.1 [7.9]	26.0 [7.6]	25.1 [7.4]	25.0 [7.3]	24.0 [7.0]	23.2 [6.8]	22.4 [6.6]	21.5 [6.3]	20.8 [6.1]	
		Sens BTUH [kW]	-2.3 [-0.7]	-2.1 [-0.6]	-1.9 [-0.6]	-0.4 [-0.1]	-0.4 [-0.1]	-0.4 [-0.1]	1.3 [0.4]	1.2 [0.3]	1.1 [0.3]	
		Power	4.6	4.5	4.4	4.6	4.5	4.4	4.6	4.5	4.4	

GROSS SYSTEMS PERFORMANCE DATA (HIGH REHEAT MODE)—(-)GEDZT102

ENTERING INDOOR AIR @ 75°F [23.9°C] dbE ①												
wbE			65.3°F [18.5°C]			64°F [17.8°C]			62.5°F [16.9°C]			
CFM [L/s]			4100 [1935]	2900 [1369]	2700 [1274]	4100 [1935]	2900 [1369]	2700 [1274]	4100 [1935]	2900 [1369]	2700 [1274]	
OUTDOOR DRY BULB TEMPERATURE °F [°C]	60 [15.6]	Total BTUH [kW]	57.6 [16.9]	53.6 [15.7]	52.9 [15.5]	45.7 [13.4]	42.5 [12.5]	42.0 [12.3]	51.3 [15.0]	47.7 [14.0]	47.1 [13.8]	
		Sens BTUH [kW]	12.7 [3.7]	10.7 [3.1]	10.3 [3.0]	14.6 [4.3]	12.2 [3.6]	11.8 [3.5]	20.5 [6.0]	17.2 [5.0]	16.6 [4.9]	
		Power	6.6	6.4	6.3	5.2	5.0	5.0	6.3	6.1	6.0	
	70 [21.1]	Total BTUH [kW]	52.7 [15.5]	49.1 [14.4]	48.4 [14.2]	40.9 [12.0]	38.0 [11.1]	37.5 [11.0]	46.4 [13.6]	43.2 [12.7]	42.6 [12.5]	
		Sens BTUH [kW]	10.1 [3.0]	8.5 [2.5]	8.2 [2.4]	11.9 [3.5]	10.0 [2.9]	9.7 [2.8]	17.9 [5.2]	15.0 [4.4]	14.5 [4.2]	
		Power	6.4	6.1	6.1	5.0	4.8	4.8	6.0	5.8	5.8	
	80 [26.7]	Total BTUH [kW]	46.3 [13.6]	43.1 [12.6]	42.6 [12.5]	34.5 [10.1]	32.1 [9.4]	31.6 [9.3]	40.0 [11.7]	37.2 [10.9]	36.7 [10.8]	
		Sens BTUH [kW]	5.6 [1.6]	4.7 [1.4]	4.5 [1.3]	7.4 [2.2]	6.2 [1.8]	6.0 [1.8]	13.3 [3.9]	11.2 [3.3]	10.8 [3.2]	
		Power	6.4	6.1	6.1	5.0	4.8	4.8	6.1	5.8	5.8	
	90 [32.2]	Total BTUH [kW]	38.4 [11.2]	35.7 [10.5]	35.2 [10.3]	26.5 [7.8]	24.7 [7.2]	24.3 [7.1]	32.1 [9.4]	29.8 [8.7]	29.4 [8.6]	
		Sens BTUH [kW]	-0.9 [-0.3]	-0.7 [-0.2]	-0.7 [-0.2]	0.9 [0.3]	0.8 [0.2]	0.8 [0.2]	6.9 [2.0]	5.8 [1.7]	5.6 [1.6]	
		Power	6.6	6.4	6.4	5.2	5.1	5.0	6.3	6.1	6.1	
	100 [37.8]	Total BTUH [kW]	28.9 [8.5]	26.9 [7.9]	26.5 [7.8]	17.0 [5.0]	15.8 [4.6]	15.6 [4.6]	22.6 [6.6]	21.0 [6.1]	20.7 [6.1]	
		Sens BTUH [kW]	-9.2 [-2.7]	-7.7 [-2.3]	-7.5 [-2.2]	-7.4 [-2.2]	-6.2 [-1.8]	-6.0 [-1.8]	-1.5 [-0.4]	-1.2 [-0.4]	-1.2 [-0.4]	
		Power	7.2	6.9	6.9	5.8	5.6	5.5	6.8	6.6	6.6	
	110 [43.3]	Total BTUH [kW]	17.9 [5.2]	16.6 [4.9]	16.4 [4.8]	6.0 [1.8]	5.6 [1.6]	5.5 [1.6]	11.5 [3.4]	10.7 [3.1]	10.6 [3.1]	
		Sens BTUH [kW]	-19.5 [-5.7]	-16.3 [-4.8]	-15.8 [-4.6]	-17.7 [-5.2]	-14.8 [-4.3]	-14.3 [-4.2]	-11.7 [-3.4]	-9.8 [-2.9]	-9.5 [-2.8]	
		Power	7.9	7.7	7.6	6.5	6.3	6.3	7.6	7.4	7.3	
	120 [48.9]	Total BTUH [kW]	5.3 [1.5]	4.9 [1.4]	4.9 [1.4]	-6.6 [-1.9]	-6.1 [-1.8]	-6.0 [-1.8]	-1.0 [-0.3]	-1.0 [-0.3]	-1.0 [-0.3]	
		Sens BTUH [kW]	-31.6 [-9.3]	-26.5 [-7.8]	-25.7 [-7.5]	-29.8 [-8.7]	-25.0 [-7.3]	-24.2 [-7.1]	-23.9 [-7.0]	-20.0 [-5.9]	-19.4 [-5.7]	
		Power	9.0	8.7	8.6	7.6	7.3	7.3	8.7	8.4	8.3	

Appendix D – Reheat Data for (-)GEDZT 10 Ton

GROSS SYSTEMS PERFORMANCE DATA (LOW REHEAT MODE)—(-)GEDZT120

ENTERING INDOOR AIR @ 75°F [23.9°C] dbE ①												
wbE			65.3°F [18.5°C]			64°F [17.8°C]			62.5°F [16.9°C]			
CFM [L/s]			3000 [1416]	2400 [1133]	2000 [944]	3000 [1416]	2400 [1133]	2000 [944]	3000 [1416]	2400 [1133]	2000 [944]	
OUTDOOR DRY BULB TEMPERATURE °F [°C]	60 [15.6]	Total BTUH [kW]	46.5 [13.6]	44.4 [13.0]	43.1 [12.6]	43.1 [12.6]	41.2 [12.1]	40.0 [11.7]	40.3 [11.8]	38.6 [11.3]	37.4 [11.0]	
		Sens BTUH [kW]	12.9 [3.8]	11.6 [3.4]	10.7 [3.1]	13.8 [4.0]	12.3 [3.6]	11.4 [3.3]	18.5 [5.4]	16.5 [4.8]	15.3 [4.5]	
		Power	4.6	4.5	4.4	4.5	4.4	4.3	4.5	4.4	4.3	
	65 [18.3]	Total BTUH [kW]	45.7 [13.4]	43.7 [12.8]	42.4 [12.4]	42.3 [12.4]	40.5 [11.9]	39.3 [11.5]	39.6 [11.6]	37.8 [11.1]	36.7 [10.8]	
		Sens BTUH [kW]	10.5 [3.1]	9.4 [2.8]	8.7 [2.5]	11.4 [3.3]	10.2 [3.0]	9.4 [2.8]	16.1 [4.7]	14.4 [4.2]	13.3 [3.9]	
		Power	4.6	4.5	4.5	4.6	4.5	4.4	4.5	4.4	4.4	
	70 [21.1]	Total BTUH [kW]	44.7 [13.1]	42.7 [12.5]	41.4 [12.1]	41.3 [12.1]	39.5 [11.6]	38.3 [11.2]	38.5 [11.3]	36.9 [10.8]	35.7 [10.5]	
		Sens BTUH [kW]	8.3 [2.4]	7.4 [2.2]	6.9 [2.0]	9.2 [2.7]	8.2 [2.4]	7.6 [2.2]	13.9 [4.1]	12.4 [3.6]	11.4 [3.4]	
		Power	4.7	4.6	4.6	4.7	4.6	4.5	4.6	4.5	4.5	
	75 [23.9]	Total BTUH [kW]	43.4 [12.7]	41.5 [12.2]	40.2 [11.8]	40.0 [11.7]	38.3 [11.2]	37.1 [10.9]	37.2 [10.9]	35.6 [10.4]	34.5 [10.1]	
		Sens BTUH [kW]	6.3 [1.8]	5.6 [1.7]	5.2 [1.5]	7.2 [2.1]	6.4 [1.9]	5.9 [1.7]	11.9 [3.5]	10.6 [3.1]	9.8 [2.9]	
		Power	4.9	4.8	4.7	4.8	4.7	4.7	4.8	4.7	4.6	
	80 [26.7]	Total BTUH [kW]	41.8 [12.2]	40.0 [11.7]	38.8 [11.4]	38.4 [11.3]	36.8 [10.8]	35.6 [10.4]	35.7 [10.5]	34.1 [10.0]	33.1 [9.7]	
		Sens BTUH [kW]	4.5 [1.3]	4.0 [1.2]	3.7 [1.1]	5.4 [1.6]	4.8 [1.4]	4.4 [1.3]	10.1 [2.9]	9.0 [2.6]	8.3 [2.4]	
		Power	5.1	5	4.9	5	4.9	4.9	5	4.9	4.8	
	85 [29.4]	Total BTUH [kW]	40.0 [11.7]	38.2 [11.2]	37.1 [10.9]	36.6 [10.7]	35.0 [10.3]	33.9 [9.9]	33.8 [9.9]	32.4 [9.5]	31.4 [9.2]	
		Sens BTUH [kW]	2.9 [0.8]	2.6 [0.8]	2.4 [0.7]	3.8 [1.1]	3.4 [1.0]	3.1 [0.9]	8.5 [2.5]	7.6 [2.2]	7.0 [2.0]	
		Power	5.4	5.3	5.2	5.3	5.2	5.1	5.3	5.2	5.1	
	90 [32.2]	Total BTUH [kW]	37.9 [11.1]	36.2 [10.6]	35.1 [10.3]	34.5 [10.1]	33.0 [9.7]	32.0 [9.4]	31.7 [9.3]	30.4 [8.9]	29.4 [8.6]	
		Sens BTUH [kW]	1.5 [0.4]	1.3 [0.4]	1.2 [0.4]	2.4 [0.7]	2.1 [0.6]	2.0 [0.6]	7.1 [2.1]	6.3 [1.9]	5.8 [1.7]	
		Power	5.7	5.6	5.5	5.6	5.5	5.4	5.6	5.5	5.4	

GROSS SYSTEMS PERFORMANCE DATA (HIGH REHEAT MODE)—(-)GEDZT120

ENTERING INDOOR AIR @ 75°F [23.9°C] dbE ①												
wbE			65.3°F [18.5°C]			64°F [17.8°C]			62.5°F [16.9°C]			
CFM [L/s]			4800 [2265]	3800 [1793]	3200 [1510]	4800 [2265]	3800 [1793]	3200 [1510]	4800 [2265]	3800 [1793]	3200 [1510]	
OUTDOOR DRY BULB TEMPERATURE °F [°C]	60 [15.6]	Total BTUH [kW]	58.1 [17.0]	55.4 [16.2]	53.9 [15.8]	55.5 [16.3]	53.0 [15.5]	51.4 [15.1]	53.1 [15.6]	50.7 [14.9]	49.2 [14.4]	
		Sens BTUH [kW]	10.5 [3.1]	9.3 [2.7]	8.6 [2.5]	15.6 [4.6]	13.9 [4.1]	12.9 [3.8]	19.9 [5.8]	17.7 [5.2]	16.4 [4.8]	
		Power	7.0	6.9	6.8	6.9	6.8	6.7	6.9	6.8	6.7	
	70 [21.1]	Total BTUH [kW]	53.4 [15.7]	51.0 [14.9]	49.5 [14.5]	50.8 [14.9]	48.5 [14.2]	47.1 [13.8]	48.4 [14.2]	46.2 [13.5]	44.9 [13.2]	
		Sens BTUH [kW]	8.3 [2.4]	7.4 [2.2]	6.8 [2.0]	13.4 [3.9]	12.0 [3.5]	11.1 [3.2]	17.7 [5.2]	15.8 [4.6]	14.6 [4.3]	
		Power	7.1	7.0	6.9	7.0	6.9	6.8	7.0	6.9	6.8	
	80 [26.7]	Total BTUH [kW]	48.4 [14.2]	46.2 [13.5]	44.9 [13.2]	45.8 [13.4]	43.7 [12.8]	42.5 [12.4]	43.4 [12.7]	41.5 [12.1]	40.3 [11.8]	
		Sens BTUH [kW]	4.5 [1.3]	4.0 [1.2]	3.7 [1.1]	9.7 [2.8]	8.6 [2.5]	8.0 [2.3]	14.0 [4.1]	12.5 [3.6]	11.5 [3.4]	
		Power	7.4	7.3	7.2	7.3	7.2	7.1	7.3	7.2	7.1	
	90 [32.2]	Total BTUH [kW]	43.1 [12.6]	41.1 [12.0]	39.9 [11.7]	40.5 [11.9]	38.6 [11.3]	37.5 [11.0]	38.1 [11.2]	36.3 [10.6]	35.3 [10.3]	
		Sens BTUH [kW]	-0.8 [-0.2]	-0.7 [-0.2]	-0.6 [-0.2]	4.4 [1.3]	3.9 [1.1]	3.6 [1.1]	8.7 [2.5]	7.7 [2.3]	7.2 [2.1]	
		Power	7.9	7.7	7.6	7.8	7.7	7.5	7.8	7.6	7.5	
	100 [37.8]	Total BTUH [kW]	37.4 [11.0]	35.7 [10.5]	34.6 [10.2]	34.8 [10.2]	33.2 [9.7]	32.2 [9.4]	32.4 [9.5]	30.9 [9.1]	30.0 [8.8]	
		Sens BTUH [kW]	-7.6 [-2.2]	-6.8 [-2.0]	-6.3 [-1.8]	-2.5 [-0.7]	-2.2 [-0.6]	-2.0 [-0.6]	1.8 [0.5]	1.6 [0.5]	1.5 [0.4]	
		Power	8.6	8.4	8.3	8.5	8.3	8.2	8.5	8.3	8.2	
	110 [43.3]	Total BTUH [kW]	31.3 [9.2]	29.9 [8.8]	29.0 [8.5]	28.7 [8.4]	27.4 [8.0]	26.6 [7.8]	26.3 [7.7]	25.1 [7.4]	24.4 [7.1]	
		Sens BTUH [kW]	-16.0 [-4.7]	-14.3 [-4.2]	-13.2 [-3.9]	-10.9 [-3.2]	-9.7 [-2.8]	-9.0 [-2.6]	-6.6 [-1.9]	-5.9 [-1.7]	-5.5 [-1.6]	
		Power	9.5	9.3	9.2	9.4	9.2	9.1	9.4	9.2	9.0	
	120 [48.9]	Total BTUH [kW]	24.9 [7.3]	23.8 [7.0]	23.1 [6.8]	22.3 [6.5]	21.3 [6.2]	20.7 [6.1]	19.9 [5.8]	19.0 [5.6]	18.5 [5.4]	
		Sens BTUH [kW]	-26.0 [-7.6]	-23.2 [-6.8]	-21.5 [-6.3]	-20.9 [-6.1]	-18.6 [-5.5]	-17.2 [-5.0]	-16.6 [-4.9]	-14.8 [-4.3]	-13.7 [-4.0]	
		Power	10.6	10.3	10.2	10.5	10.2	10.1	10.5	10.2	10.1	

P. APPENDICES

Appendix D – Reheat Data for (-)GEDZT 12.5 Ton

GROSS SYSTEMS PERFORMANCE DATA (LOW REHEAT MODE)—(-)GEDZT150

ENTERING INDOOR AIR @ 75°F [23.9°C] dbE ①											
wbE			65.3°F [18.5°C]			64°F [17.8°C]			62.5°F [16.9°C]		
CFM [L/s]			3000 [1416]	2400 [1133]	2000 [944]	3000 [1416]	2400 [1133]	2000 [944]	3000 [1416]	2400 [1133]	2000 [944]
OUTDOOR DRY BULB TEMPERATURE °F [°C]	60 [15.6]	Total BTUH [kW]	46.5 [13.6]	44.4 [13.0]	43.1 [12.6]	43.1 [12.6]	41.2 [12.1]	40.0 [11.7]	40.3 [11.8]	38.6 [11.3]	37.4 [11.0]
		Sens BTUH [kW]	12.9 [3.8]	11.6 [3.4]	10.7 [3.1]	13.8 [4.0]	12.3 [3.6]	11.4 [3.3]	18.5 [5.4]	16.5 [4.8]	15.3 [4.5]
		Power	4.6	4.5	4.4	4.5	4.4	4.3	4.5	4.4	4.3
	65 [18.3]	Total BTUH [kW]	45.7 [13.4]	43.7 [12.8]	42.4 [12.4]	42.3 [12.4]	40.5 [11.9]	39.3 [11.5]	39.6 [11.6]	37.8 [11.1]	36.7 [10.8]
		Sens BTUH [kW]	10.5 [3.1]	9.4 [2.8]	8.7 [2.5]	11.4 [3.3]	10.2 [3.0]	9.4 [2.8]	16.1 [4.7]	14.4 [4.2]	13.3 [3.9]
		Power	4.6	4.5	4.5	4.6	4.5	4.4	4.5	4.4	4.4
	70 [21.1]	Total BTUH [kW]	44.7 [13.1]	42.7 [12.5]	41.4 [12.1]	41.3 [12.1]	39.5 [11.6]	38.3 [11.2]	38.5 [11.3]	36.9 [10.8]	35.7 [10.5]
		Sens BTUH [kW]	8.3 [2.4]	7.4 [2.2]	6.9 [2.0]	9.2 [2.7]	8.2 [2.4]	7.6 [2.2]	13.9 [4.1]	12.4 [3.6]	11.4 [3.4]
		Power	4.7	4.6	4.6	4.7	4.6	4.5	4.6	4.5	4.5
	75 [23.9]	Total BTUH [kW]	43.4 [12.7]	41.5 [12.2]	40.2 [11.8]	40.0 [11.7]	38.3 [11.2]	37.1 [10.9]	37.2 [10.9]	35.6 [10.4]	34.5 [10.1]
		Sens BTUH [kW]	6.3 [1.8]	5.6 [1.7]	5.2 [1.5]	7.2 [2.1]	6.4 [1.9]	5.9 [1.7]	11.9 [3.5]	10.6 [3.1]	9.8 [2.9]
		Power	4.9	4.8	4.7	4.8	4.7	4.7	4.8	4.7	4.6
	80 [26.7]	Total BTUH [kW]	41.8 [12.2]	40.0 [11.7]	38.8 [11.4]	38.4 [11.3]	36.8 [10.8]	35.6 [10.4]	35.7 [10.5]	34.1 [10.0]	33.1 [9.7]
		Sens BTUH [kW]	4.5 [1.3]	4.0 [1.2]	3.7 [1.1]	5.4 [1.6]	4.8 [1.4]	4.4 [1.3]	10.1 [2.9]	9.0 [2.6]	8.3 [2.4]
		Power	5.1	5	4.9	5	4.9	4.9	5	4.9	4.8
	85 [29.4]	Total BTUH [kW]	40.0 [11.7]	38.2 [11.2]	37.1 [10.9]	36.6 [10.7]	35.0 [10.3]	33.9 [9.9]	33.8 [9.9]	32.4 [9.5]	31.4 [9.2]
		Sens BTUH [kW]	2.9 [0.8]	2.6 [0.8]	2.4 [0.7]	3.8 [1.1]	3.4 [1.0]	3.1 [0.9]	8.5 [2.5]	7.6 [2.2]	7.0 [2.0]
		Power	5.4	5.3	5.2	5.3	5.2	5.1	5.3	5.2	5.1
	90 [32.2]	Total BTUH [kW]	37.9 [11.1]	36.2 [10.6]	35.1 [10.3]	34.5 [10.1]	33.0 [9.7]	32.0 [9.4]	31.7 [9.3]	30.4 [8.9]	29.4 [8.6]
		Sens BTUH [kW]	1.5 [0.4]	1.3 [0.4]	1.2 [0.4]	2.4 [0.7]	2.1 [0.6]	2.0 [0.6]	7.1 [2.1]	6.3 [1.9]	5.8 [1.7]
		Power	5.7	5.6	5.5	5.6	5.5	5.4	5.6	5.5	5.4

GROSS SYSTEMS PERFORMANCE DATA (HIGH REHEAT MODE)—(-)GEDZT150

ENTERING INDOOR AIR @ 75°F [23.9°C] dbE ①											
wbE			65.3°F [18.5°C]			64°F [17.8°C]			62.5°F [16.9°C]		
CFM [L/s]			6000 [2832]	4100 [1935]	4000 [1888]	6000 [2832]	4100 [1935]	4000 [1888]	6000 [2832]	4100 [1935]	4000 [1888]
OUTDOOR DRY BULB TEMPERATURE °F [°C]	60ºF [15.6]	Total BTUH [kW]	99.3 [29.1]	91.5 [26.8]	91.1 [26.7]	101.6 [29.8]	93.7 [27.4]	93.2 [27.3]	92.7 [27.2]	85.5 [25.1]	85.2 [25.0]
		Sens BTUH [kW]	33.3 [9.7]	27.4 [8.0]	27.0 [7.9]	40.1 [11.8]	33.0 [9.7]	32.6 [9.6]	46.4 [13.6]	38.1 [11.2]	37.7 [11.0]
		Power	9.5	9.1	9.1	9.3	8.9	8.9	9.3	8.9	8.9
	70ºF [21.1]	Total BTUH [kW]	94.4 [27.7]	87.1 [25.5]	86.7 [25.4]	96.7 [28.3]	89.2 [26.1]	88.8 [26.0]	87.9 [25.8]	81.1 [23.8]	80.7 [23.7]
		Sens BTUH [kW]	27 [7.9]	22.2 [6.5]	21.9 [6.4]	33.9 [9.9]	27.9 [8.2]	27.5 [8.1]	40.1 [11.7]	33.0 [9.7]	32.6 [9.5]
		Power	9.7	9.3	9.3	9.5	9.2	9.2	9.5	9.2	9.1
	80ºF [26.7]	Total BTUH [kW]	87.6 [25.7]	80.8 [23.7]	80.4 [23.6]	89.9 [26.3]	82.9 [24.3]	82.5 [24.2]	81.1 [23.8]	74.8 [21.9]	74.4 [21.8]
		Sens BTUH [kW]	20.1 [5.9]	16.5 [4.8]	16.3 [4.8]	27.0 [7.9]	22.2 [6.5]	21.9 [6.4]	33.2 [9.7]	27.3 [8.0]	27.0 [7.9]
		Power	10.2	9.8	9.8	10	9.6	9.6	10	9.6	9.6
	90ºF [32.2]	Total BTUH [kW]	78.7 [23.1]	72.6 [21.3]	72.3 [21.2]	81.0 [23.7]	74.7 [21.9]	74.4 [21.8]	72.2 [21.2]	66.6 [19.5]	66.3 [19.4]
		Sens BTUH [kW]	12.5 [3.7]	10.3 [3.0]	10.2 [3.0]	19.4 [5.7]	15.9 [4.7]	15.8 [4.6]	25.6 [7.5]	21.0 [6.2]	20.8 [6.1]
		Power	11	10.5	10.5	10.8	10.4	10.3	10.8	10.3	10.3
	100ºF [37.8]	Total BTUH [kW]	67.8 [19.9]	62.5 [18.3]	62.3 [18.2]	70.1 [20.5]	64.7 [18.9]	64.4 [18.9]	61.3 [18.0]	56.5 [16.6]	56.3 [16.5]
		Sens BTUH [kW]	4.3 [1.3]	3.5 [1.0]	3.5 [1.0]	11.2 [3.3]	9.2 [2.7]	9.1 [2.7]	17.4 [5.1]	14.3 [4.2]	14.1 [4.1]
		Power	11.9	11.5	11.4	11.8	11.3	11.3	11.8	11.3	11.3
	110 [43.3]	Total BTUH [kW]	54.9 [16.1]	50.6 [14.8]	50.4 [14.8]	57.2 [16.8]	52.7 [15.5]	52.5 [15.4]	48.4 [14.2]	44.6 [13.1]	44.4 [13.0]
		Sens BTUH [kW]	-4.6 [-1.3]	-3.8 [-1.1]	-3.7 [-1.1]	2.3 [0.7]	1.9 [0.5]	1.9 [0.5]	8.5 [2.5]	7.0 [2.0]	6.9 [2.0]
		Power	13.2	12.6	12.6	13	12.5	12.4	13	12.5	12.4
	120 [48.9]	Total BTUH [kW]	40.0 [11.7]	36.8 [10.8]	36.7 [10.8]	42.3 [12.4]	39.0 [11.4]	38.8 [11.4]	33.4 [9.8]	30.8 [0.9]	30.7 [9.0]
		Sens BTUH [kW]	-14.1 [-4.1]	-11.6 [-3.4]	-11.5 [-3.4]	-7.2 [-2.1]	-6.0 [-1.7]	-5.9 [-1.7]	-1.0 [-0.3]	-0.9 [-0.2]	-0.8 [-0.2]
		Power	14.6	14.1	14	14.5	13.9	13.9	14.4	13.9	13.8

Appendix E – Heating Performance

Models: (-)GED **Gas Heat Performance Specifications**

208-230V, 575V, 460V						
Tonnage	**7.5-Ton**		**8.5-Ton**		**10-Ton**	
Heating Input BTU [kW] (High-Fire / Low-Fire)	150,000/105,000	205,000/143,500	150,000/105,000	225,000/157,500	150,000/105,000	225,000/157,500
	[43.95/30.76]	[60.06/42.06]	[43.95/30.76]	[65.92/46.16]	[43.95/30.76]	[65.92/46.16]
Heating Output BTU [kW] (High-Fire / Low-Fire)	121,500/85,050	166,050/116,235	121,500/85,050	182,250/127,575	121,500/85,050	182,250/127,575
	[35.6/24.92]	[48.66/34.07]	[35.6/24.92]	[53.4/37.39]	[35.6/24.92]	[53.4/37.39]
High-Fire Rise Range °F [°C]	25-55 [13.9-30.6]	35-65 [19.4-36.1]	15-45 [8.3-25]	35-65 [19.4-36.1]	20-50 [11.1-27.8]	35-65 [19.4-36.1]
	10-40 [5.6-22.2]	20-50 [11.1-27.8]	5-35 [2.8-19.4]	15-45 [8.3-25]	10-40 [5.6-22.2]	15-45 [8.3-25]
Main Limit Temp °F	145	145	145	155	145	145
	350	350	350	350	350	350
Rating ESP In. W.C.	0.33	0.33	0.33	0.33	0.33	0.33
Maximum ESP In. W.C.	0.8	0.8	0.8	0.8	0.8	0.8
Max Outlet Air Temp °F [°C]	200 [93.3]	185 [85.0]	200 [93.3]	200 [93.3]	200 [93.3]	185 [85.0]
% AFUE	81.0%	81.0%	81.0%	81.0%	81.0%	81.0%
% Steady State Efficiency	81.0%	81.0%	81.0%	81.0%	81.0%	81.0%

208-230V, 575V, 460V		
Tonnage	**12.5-Ton**	
Heating Input BTU [kW] (High-Fire / Low-Fire)	150,000/105,000	225,000/157,500
	[43.95/30.76]	[65.92/46.16]
Heating Output BTU [kW] (High-Fire / Low-Fire)	121,500/85,050	182,250/127,575
	[35.6/24.92]	[53.4/37.39]
High-Fire Rise Range °F [°C]	15-45 [8.3-25]	25-55 [13.9-30.6]
	5-35 [2.8-19.4]	10-40 [5.6-22.2]
Main Limit Temp °F	145	145
	350	350
Rating ESP In. W.C.	0.33	0.33
Maximum ESP In. W.C.	0.8	0.8
Max Outlet Air Temp °F [°C]	195 [90.6]	200 [93.3]
% AFUE	81.0%	81.0%
% Steady State Efficiency	81.0%	81.0%

P. APPENDICES

Appendix F – Refrigerant Charging Charts

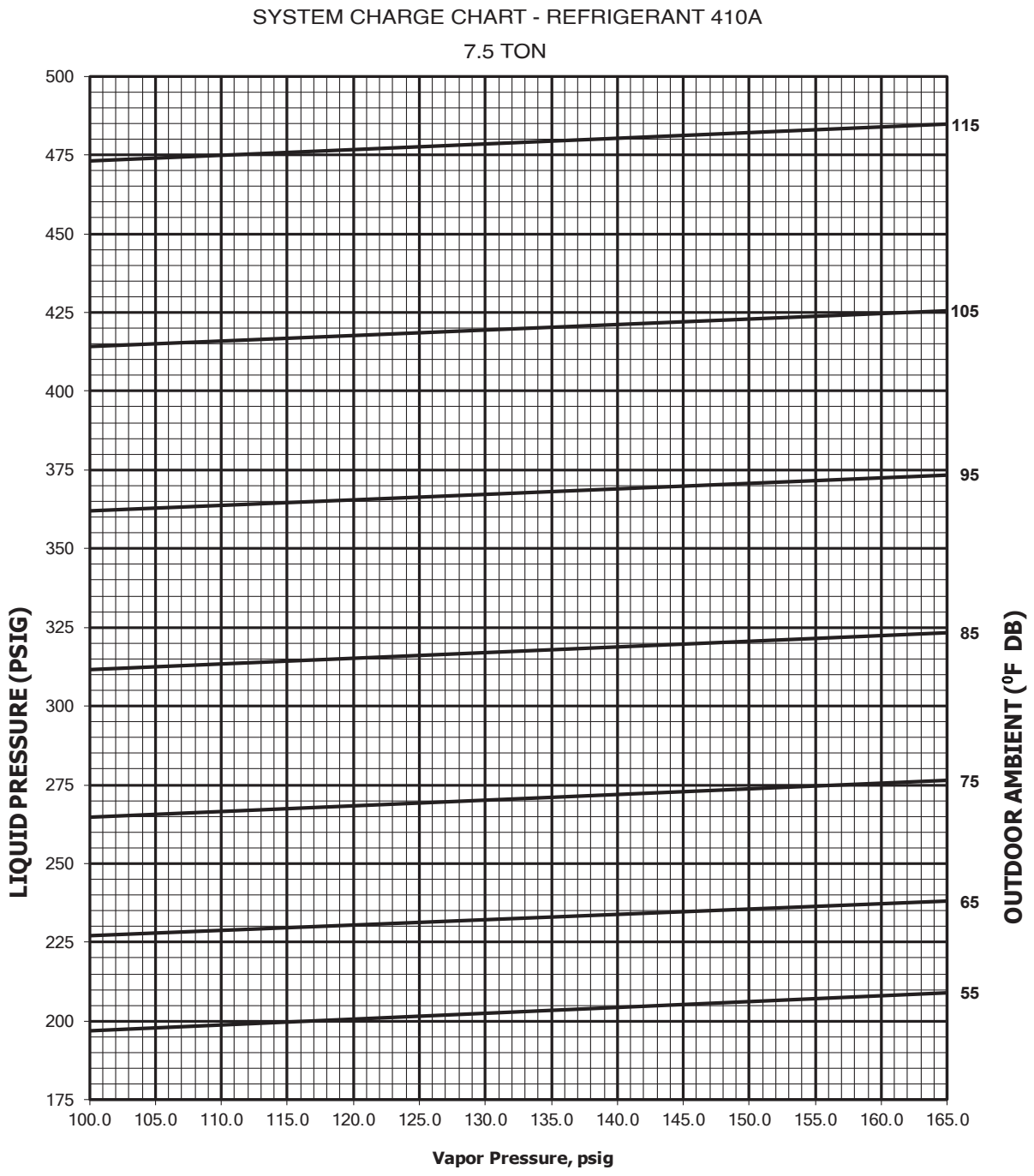

CAUTION: 1. RETURN AIR TEMPERATURE MUST BE WITHIN COMFORT CONDITIONS BEFORE FINAL REFRIGERANT CHECK!

INSTRUCTIONS:
1. MEASURE PRESSURE AT COMPRESSOR SUCTION AND L IOUID.
2. MEASURE OUTDOOR AMBIENT TO UNIT.
3. PLACE X ON CHART WHERE SUCTION AND LIOUID INTERSECT.
4. IF X IS BELOW OUTDOOR AMBIENT L:NE, ADD CHARGE AND REPEAT STEPS 1-3.
5. IF X IS ABOVE OUTDOOR AMBIENT LINE, RECOVER ExCESS CHARGE AND REPEAT STEPS 1-3.

92-106138-01-00

Appendix F – Refrigerant Charging Charts

SYSTEM CHARGE CHART - REFRIGERANT 410A

8.5 TON

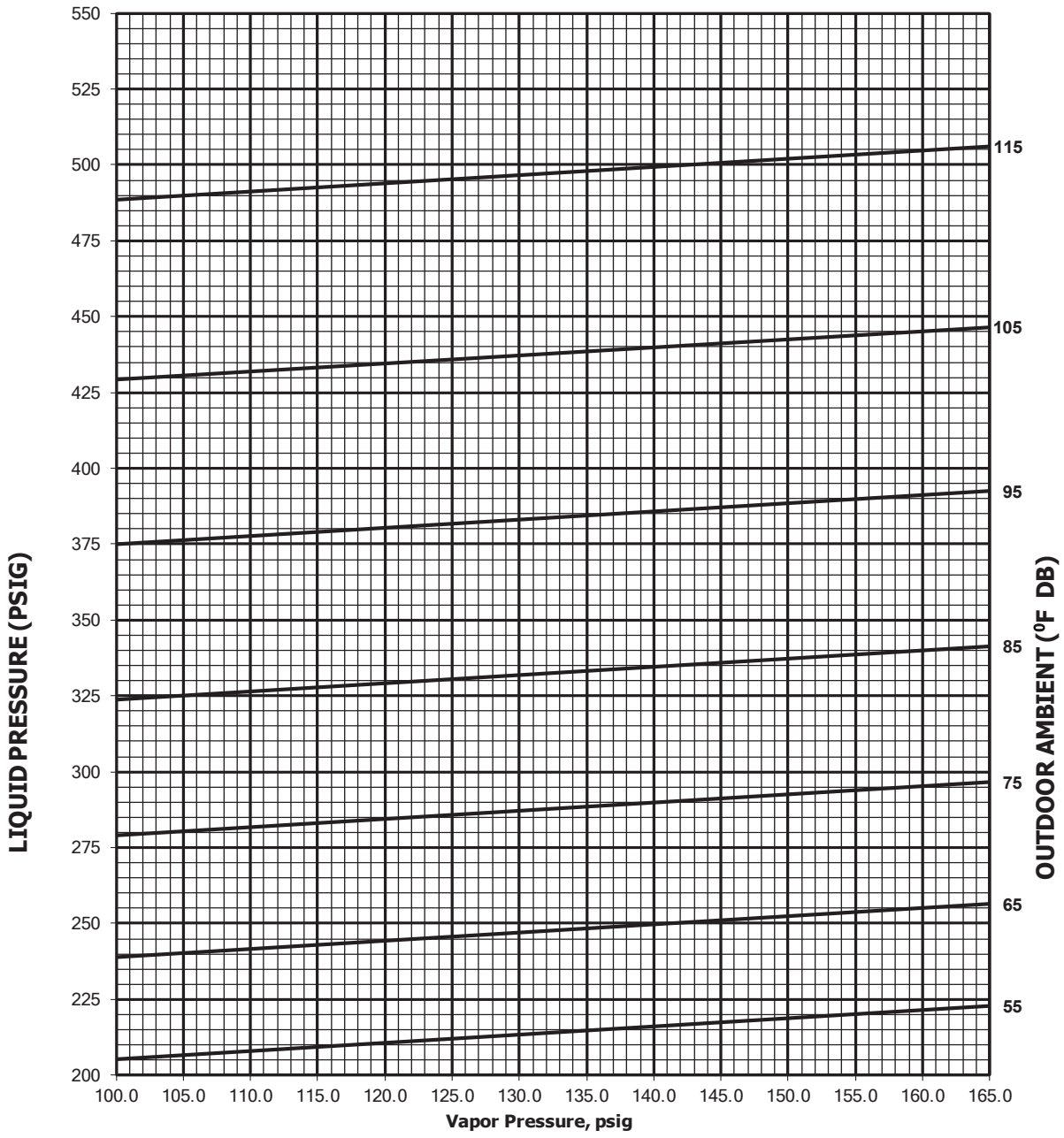

CAUTION: 1. RETURN AIR TEMPERATURE MUST BE WITHIN COMFORT CONDITIONS BEFORE FINAL REFRIGERANT CHECK!

INSTRUCTIONS:
1. MEASURE PRESSURE AT COMPRESSOR SUCTION AND L IOUID.
2. MEASURE OUTDOOR AMBIENT TO UNIT.
3. PLACE X ON CHART WHERE SUCTION AND LIOUID INTERSECT.
4. IF X IS BELOW OUTDOOR AMBIENT L:NE, ADD CHARGE AND REPEAT STEPS 1-3.
5. IF X IS ABOVE OUTDOOR AMBIENT LINE, RECOVER ExCESS CHARGE AND REPEAT STEPS 1-3.

92-106138-02-00

P. APPENDICES

Appendix F – Refrigerant Charging Charts

SYSTEM CHARGE CHART - REFRIGERANT 410A

10 TON

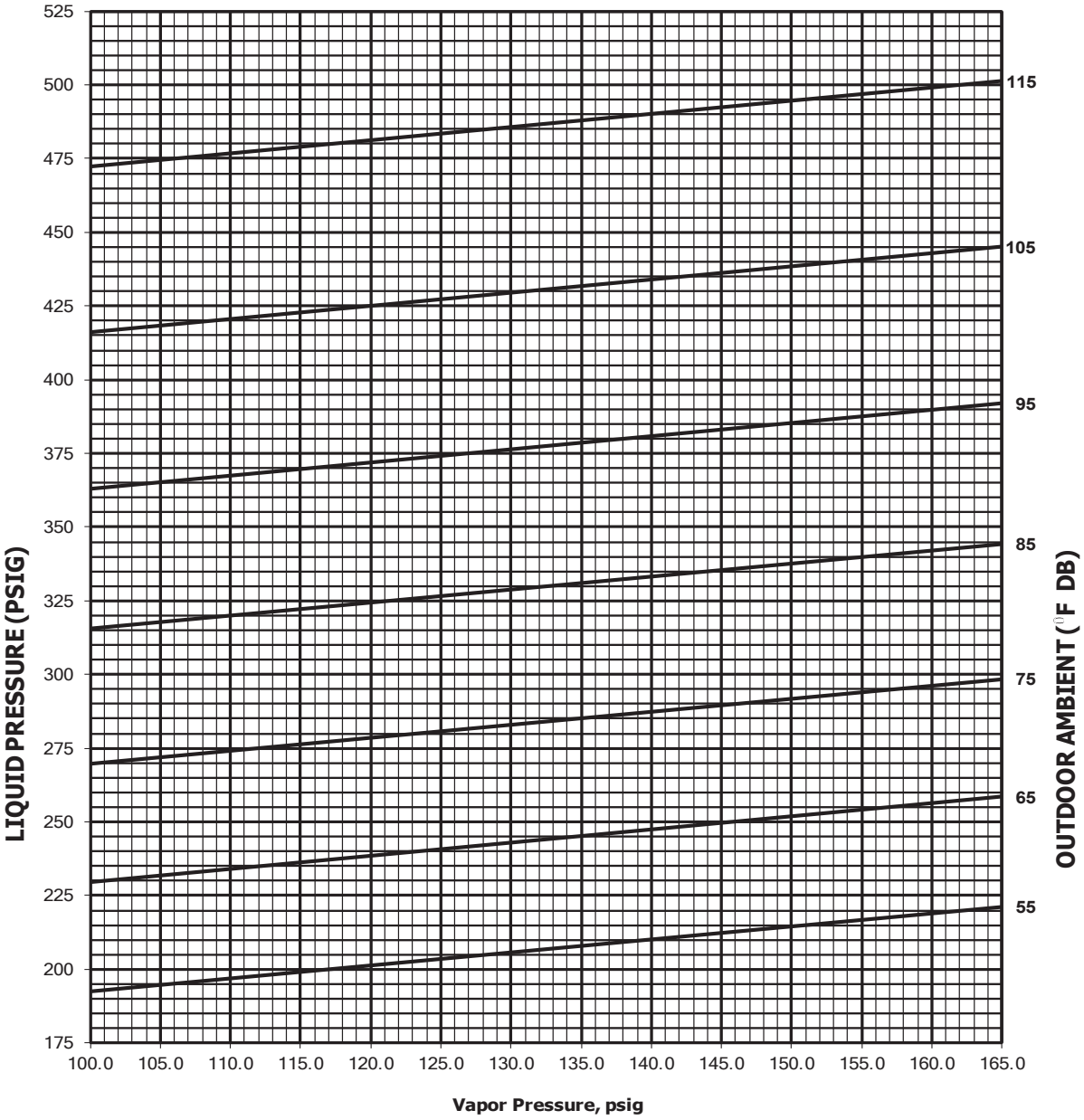

CAUTION: **1. RETURN AIR TEMPERATURE MUST BE WITHIN COMFORT CONDITIONS BEFORE FINAL REFRIGERANT CHECK!**

INSTRUCTIONS:
1. MEASURE PRESSURE AT COMPRESSOR SUCTION AND L IOUID.
2.MEASURE OUTDOOR AMBIENT TO UNIT.
3.PLACE X ON CHART WHERE SUCTION AND LIOUID INTERSECT.
4.IF X IS BELOW OUTDOOR AMBIENT L:NE, ADD CHARGE AND REPEAT STEPS 1-3.
5.IF X IS ABOVE OUTDOOR AMBIENT LINE, RECOVER ExCESS CHARGE AND REPEAT STEPS 1-3.

92-106138-03-00

Appendix F – Refrigerant Charging Charts (Cont.)

12.5-Ton AC Charging Chart

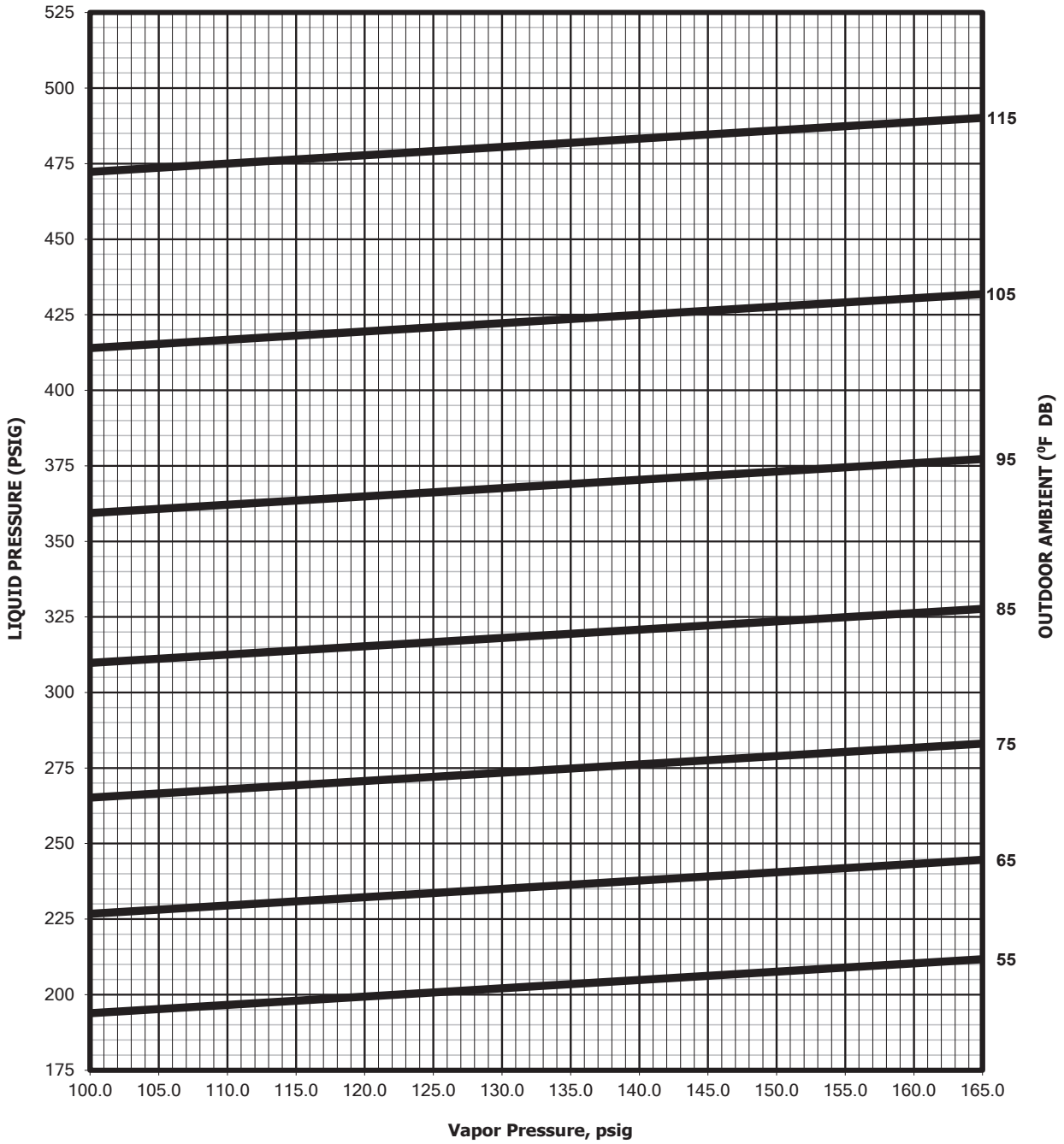

CAUTION: 1. RETURN AIR TEMPERATURE MUST BE WITHIN COMFORT CONDITIONS BEFORE FINAL REFRIGERANT CHECK!

INSTRUCTIONS:
1. MEASURE PRESSURE AT COMPRESSOR SUCTION AND LIQUID.
2. MEASURE OUTDOOR AMBIENT TO UNIT.
3. PLACE X ON CHART WHERE SUCTION AND LIQUID INTERSECT.
4. IF X IS BELOW OUTDOOR AMBIENT LINE, ADD CHARGE AND REPEAT STEPS 1-3.
5. IF X IS ABOVE OUTDOOR AMBIENT LINE, RECOVER EXCESS CHARGE AND REPEAT STEPS 1-3.

92-106138-04-00

P. APPENDICES

Appendix F – Refrigerant Charging Charts

7.5 Ton 2 - Stage AC Charging Chart

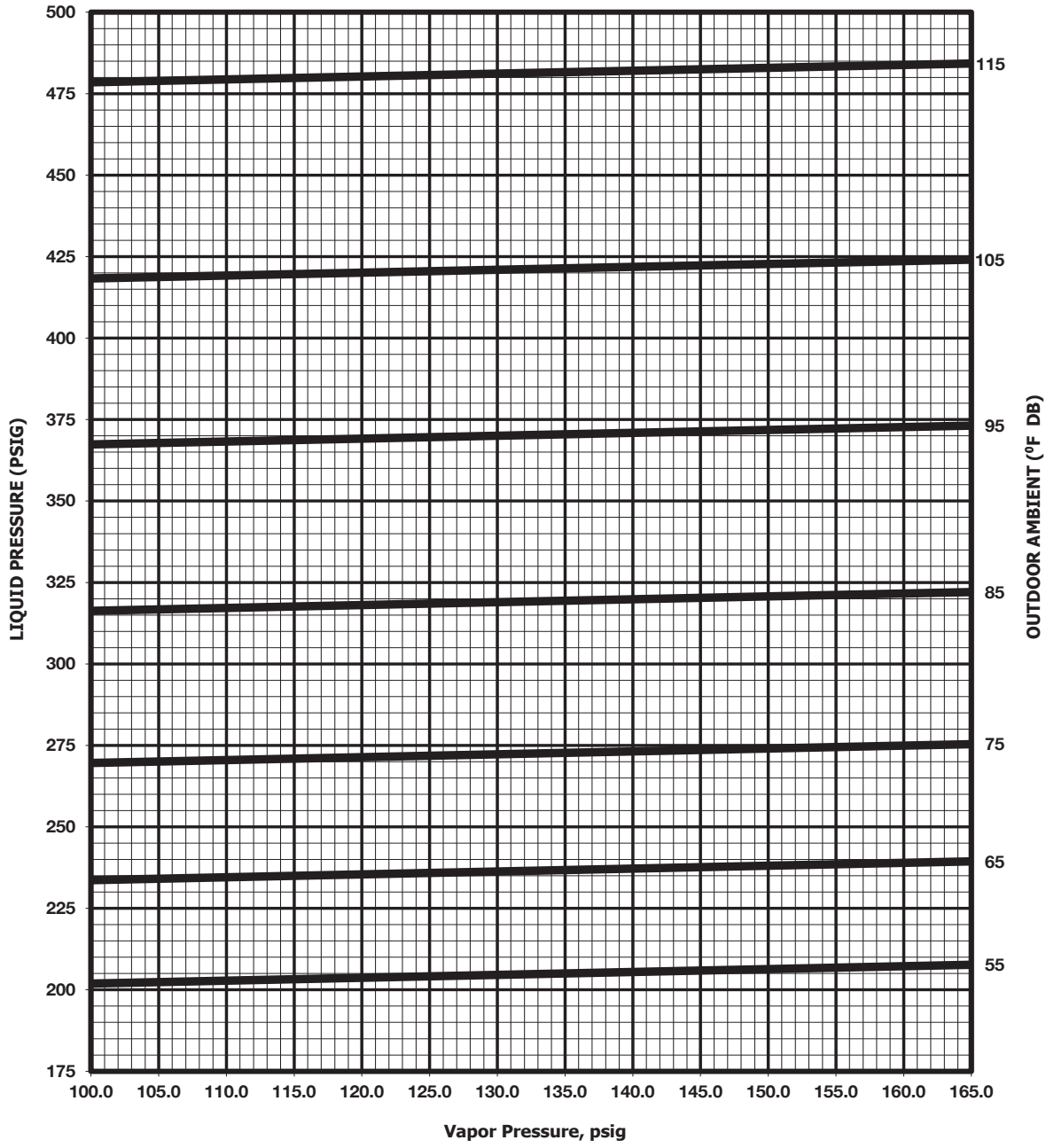

CAUTION: 1. RETURN AIR TEMPERATURE MUST BE WITHIN COMFORT CONDITIONS BEFORE FINAL REFRIGERANT CHECK!

INSTRUCTIONS: 1. MEASURE PRESSURE AT COMPRESSOR SUCTION AND LIQUID.
2. MEASURE OUTDOOR AMBIENT TO UNIT.
3. PLACE X ON CHART WHERE SUCTION AND LIQUID INTERSECT.
4. IF X IS BELOW OUTDOOR AMBIENT LINE, ADD CHARGE AND REPEAT STEPS 1-3.
5. IF X IS ABOVE OUTDOOR AMBIENT LINE, RECOVER EXCESS CHARGE AND REPEAT STEPS 1-3.

92-106138-09-00

Appendix F – Refrigerant Charging Charts

8.5 Ton 2 - Stage AC Charging Chart

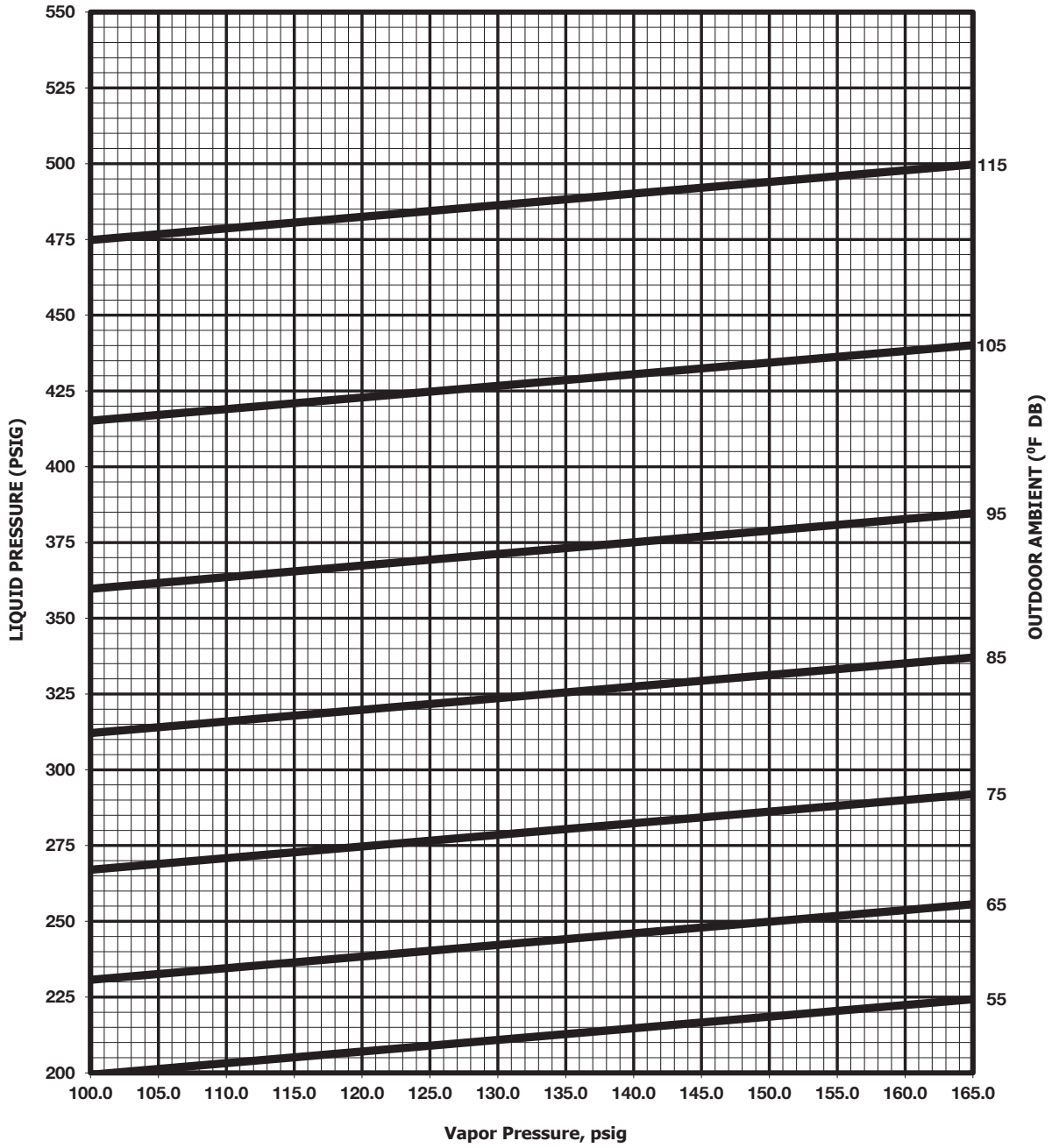

CAUTION: 1. RETURN AIR TEMPERATURE MUST BE WITHIN COMFORT CONDITIONS BEFORE FINAL REFRIGERANT CHECK!

INSTRUCTIONS: 1. MEASURE PRESSURE AT COMPRESSOR SUCTION AND LIQUID.
2. MEASURE OUTDOOR AMBIENT TO UNIT.
3. PLACE X ON CHART WHERE SUCTION AND LIQUID INTERSECT.
4. IF X IS BELOW OUTDOOR AMBIENT LINE, ADD CHARGE AND REPEAT STEPS 1-3.
5. IF X IS ABOVE OUTDOOR AMBIENT LINE, RECOVER EXCESS CHARGE AND REPEAT STEPS 1-3.

92-106138-10-00

P. APPENDICES

Appendix F – Refrigerant Charging Charts (Cont.)

10-Ton 2 Stage AC Charging Chart

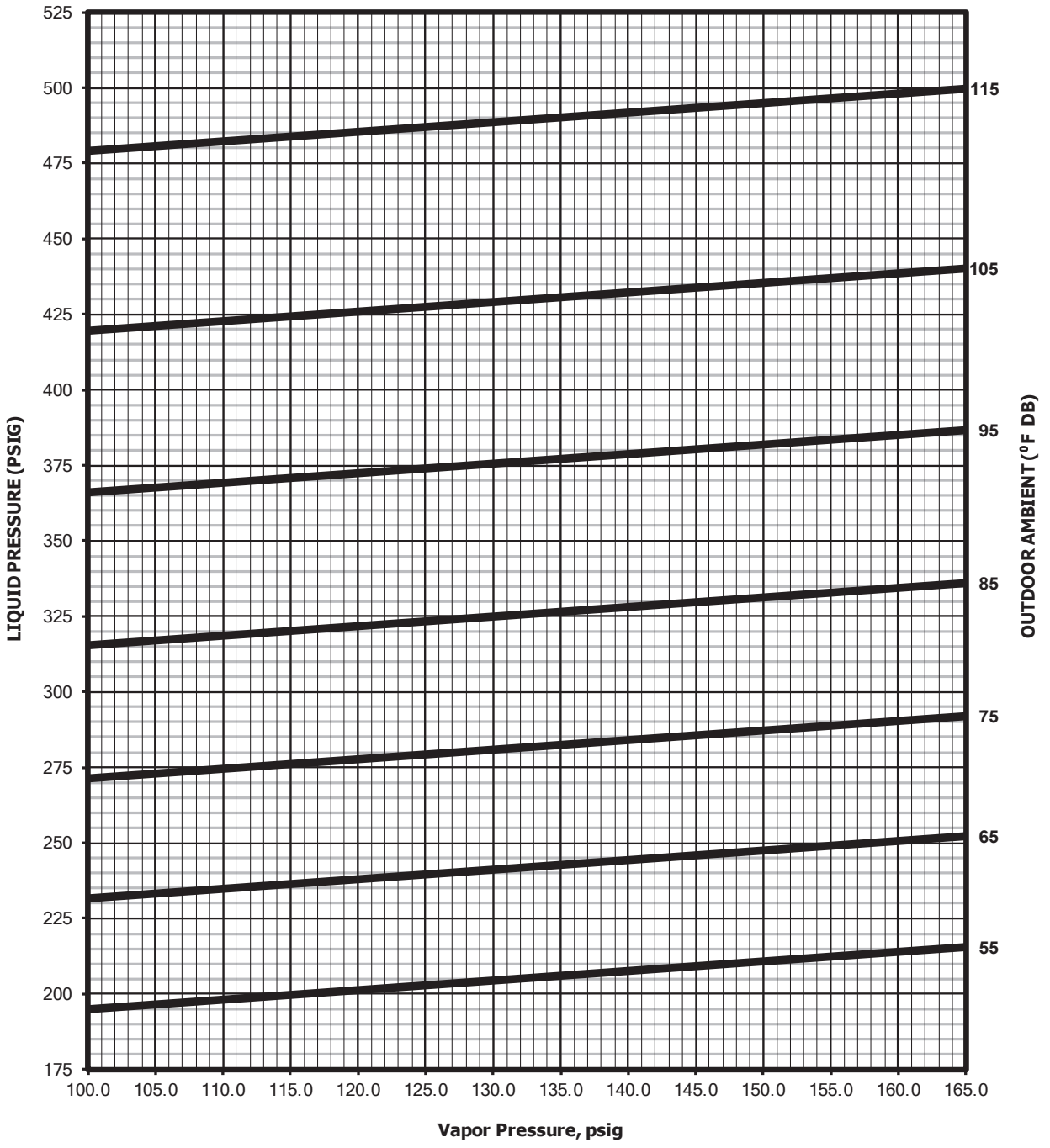

CAUTION: 1. RETURN AIR TEMPERATURE MUST BE WITHIN COMFORT CONDITIONS BEFORE FINAL REFRIGERANT CHECK!

INSTRUCTIONS:
1. MEASURE PRESSURE AT COMPRESSOR SUCTION AND LIQUID.
2. MEASURE OUTDOOR AMBIENT TO UNIT.
3. PLACE X ON CHART WHERE SUCTION AND LIQUID INTERSECT.
4. IF X IS BELOW OUTDOOR AMBIENT LINE, ADD CHARGE AND REPEAT STEPS 1-3.
5. IF X IS ABOVE OUTDOOR AMBIENT LINE, RECOVER EXCESS CHARGE AND REPEAT STEPS 1-3.

92-106138-11-00

Appendix F – Refrigerant Charging Charts (Cont.)

SYSTEM CHARGE CHART – REFRIGERANT 410 A

PRESSURE REQUIREMENTS – GROSS CHARGE CHECK (REFER CHARGE CHART)

OUTDOOR DRY BULB (°F)	7.5 -TON	8.5 -TON	10 -TON	12.5 -TON
	LIQUID /VAPOR PRESSURE (PSIG)			
115	510.2/147.22	504.13/141.62	500.9/138.5	497.1/138.6
105	450.64/144.8	443.53/139.2	436.5/143.9	438.5/136.5
95	398.19/144	393.38/136.06	389.3/134.1	384.6/134.9
85	354.59/140.06	341.45/135.13	337.5/132.1	336.1/133.5
75	311.67/136.7	297.72/133.41	294.2/130.4	293.1/132.1
65	272.9/132.96	261.32/130.57	255.3/128.6	255.2/130
55	243.58/131.27	230.36/127.47	218.1/125.8	219.8/125.8

SUB COOLING REQUIREMENTS – FINAL CHARGE VERIFICATION

OUTDOOR DRY BULB (°F)	7.5 -TON	8.5 -TON	10 -TON	12.5 -TON
	SUBCOOLING (°F)			
115	12.1	15.6	15.8	13.3
105	10.8	14.9	14.2	13
95	9.8	14.2	15.5	12.4
85	9.8	13	13.8	10.8
75	8.1	11.7	13	9.7
65	11.7	11.2	12	9.3
55	11.8	12.2	10.7	10.6

1. This is required to fine-tune unit charge.

2. The Indoor ambient temperature must be between 72 °F and 82 °F dry bulb at the indoor coil.

3. Confirm the indoor air supply is at the rated CFM listed in ***Appendix A***.

4. Allow the system to run long enough for temperatures and pressures to stabilize; at least fifteen minutes.

5. Measure liquid pressure and line temperature at the liquid line service port (refer to ***Section J.4.2.1.*** for the liquid line temperature measurement location). BE SURE TO USE ZERO LOSS FITTINGS WHILE MEASURING 82

6. To find the saturation temperature at the measured pressure, subtract the measured liquid line temperature from the saturation pressure to get the sub-cooling.

7. Check if the Sub-Cooling is within +/- 2.0 °F tolerance.

8.If the sub-cooling values are significantly different (> 20 psig) from those listed on the table in ***Appendix F***, there may be an airflow or component issue. Refer to section M. Diagnostics for more information.

P. APPENDICES

Appendix G. Wiring Diagrams & Schematics

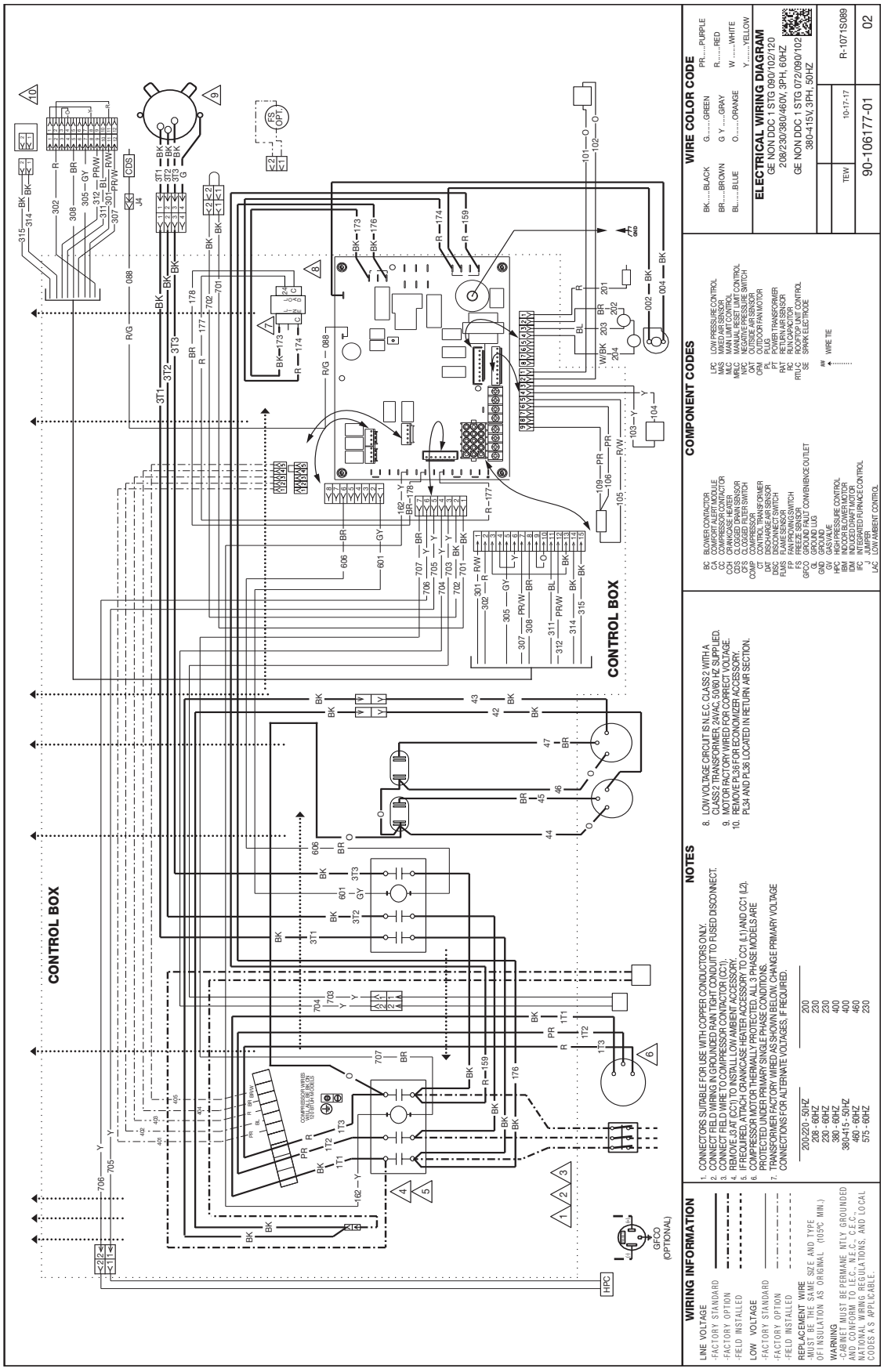

Appendix G. Wiring Diagrams & Schematics (Cont.)

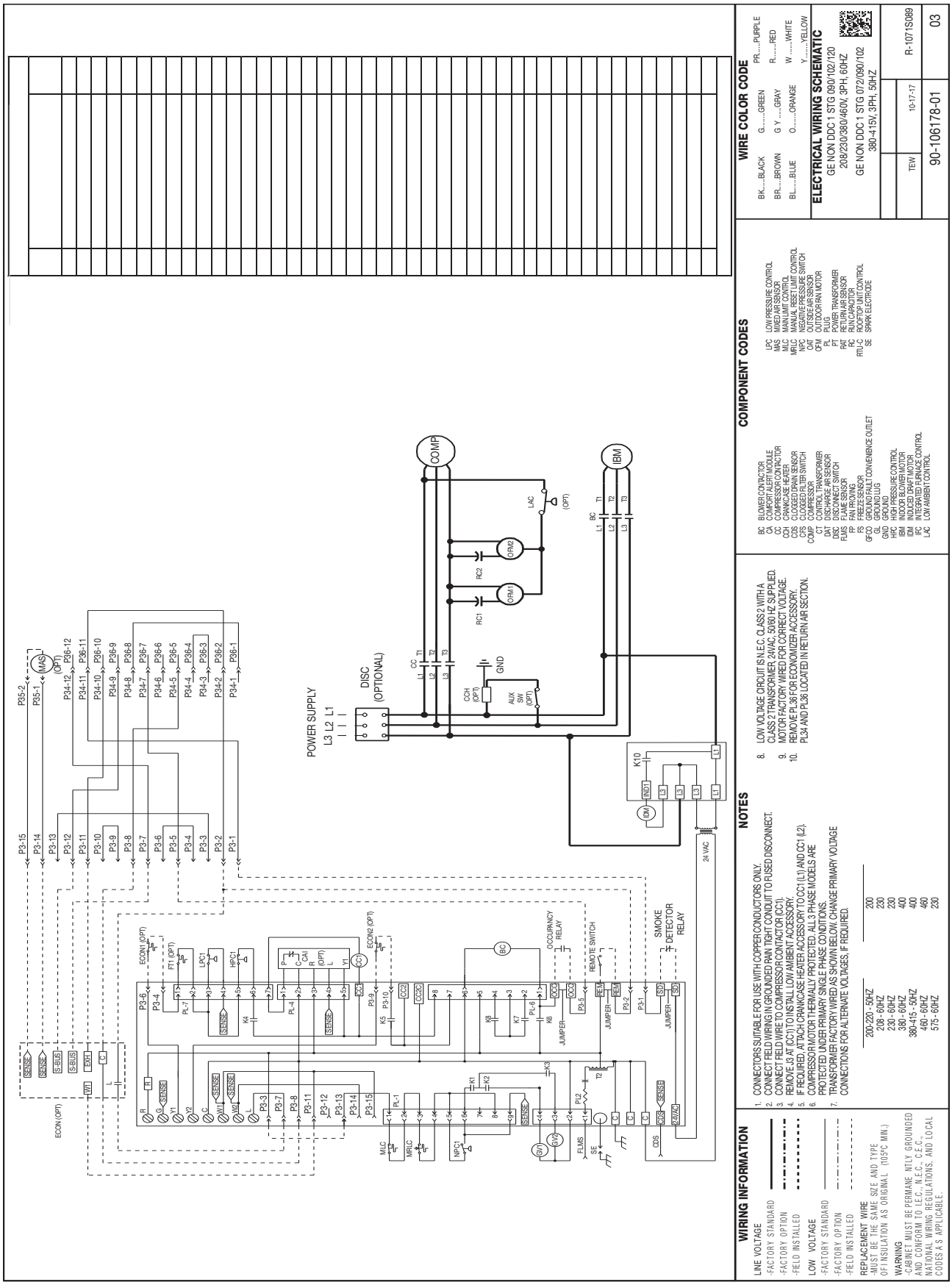

P. APPENDICES

Appendix G. Wiring Diagrams & Schematics (Cont.)

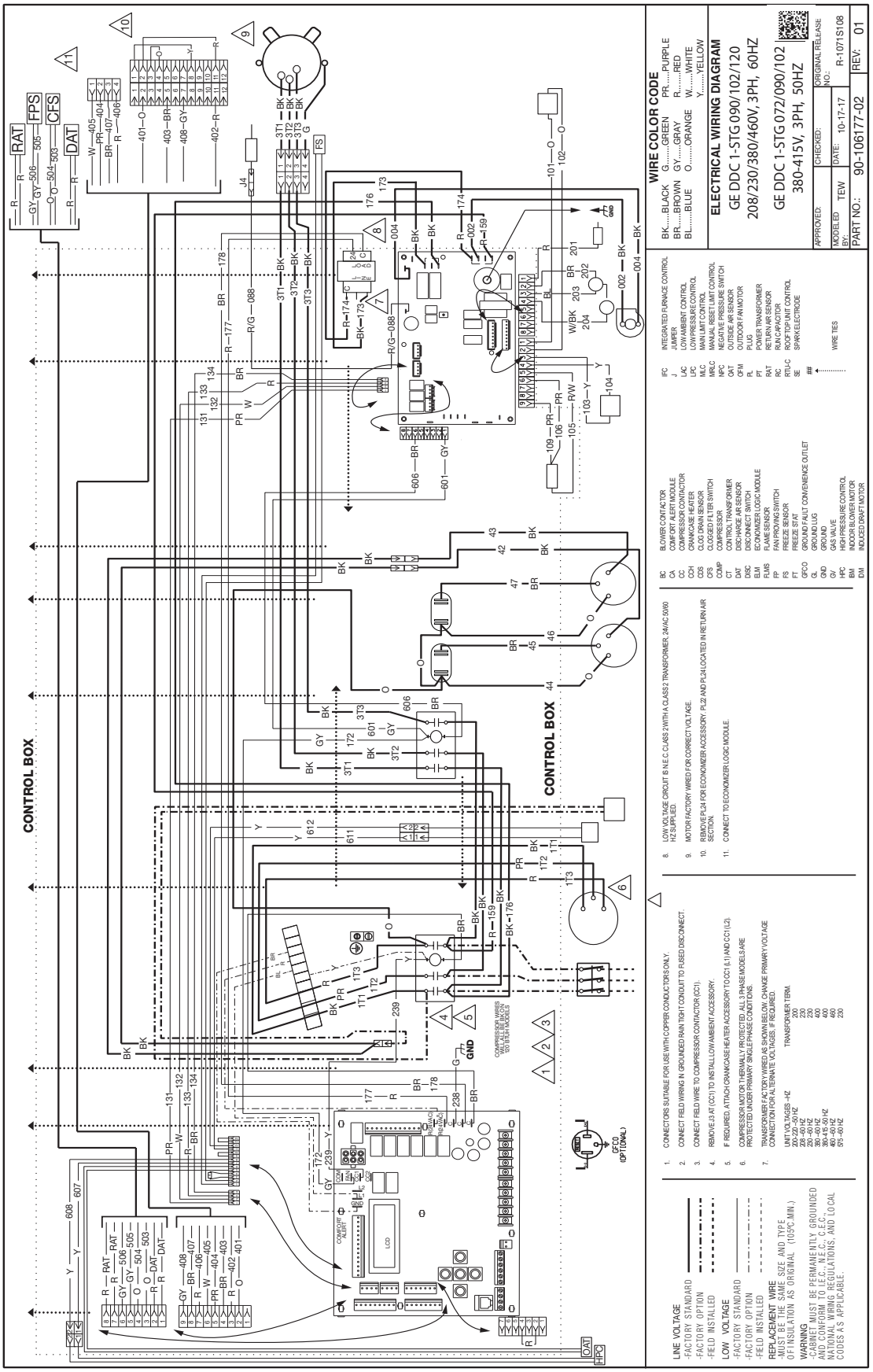

Appendix G. Wiring Diagrams & Schematics (Cont.)

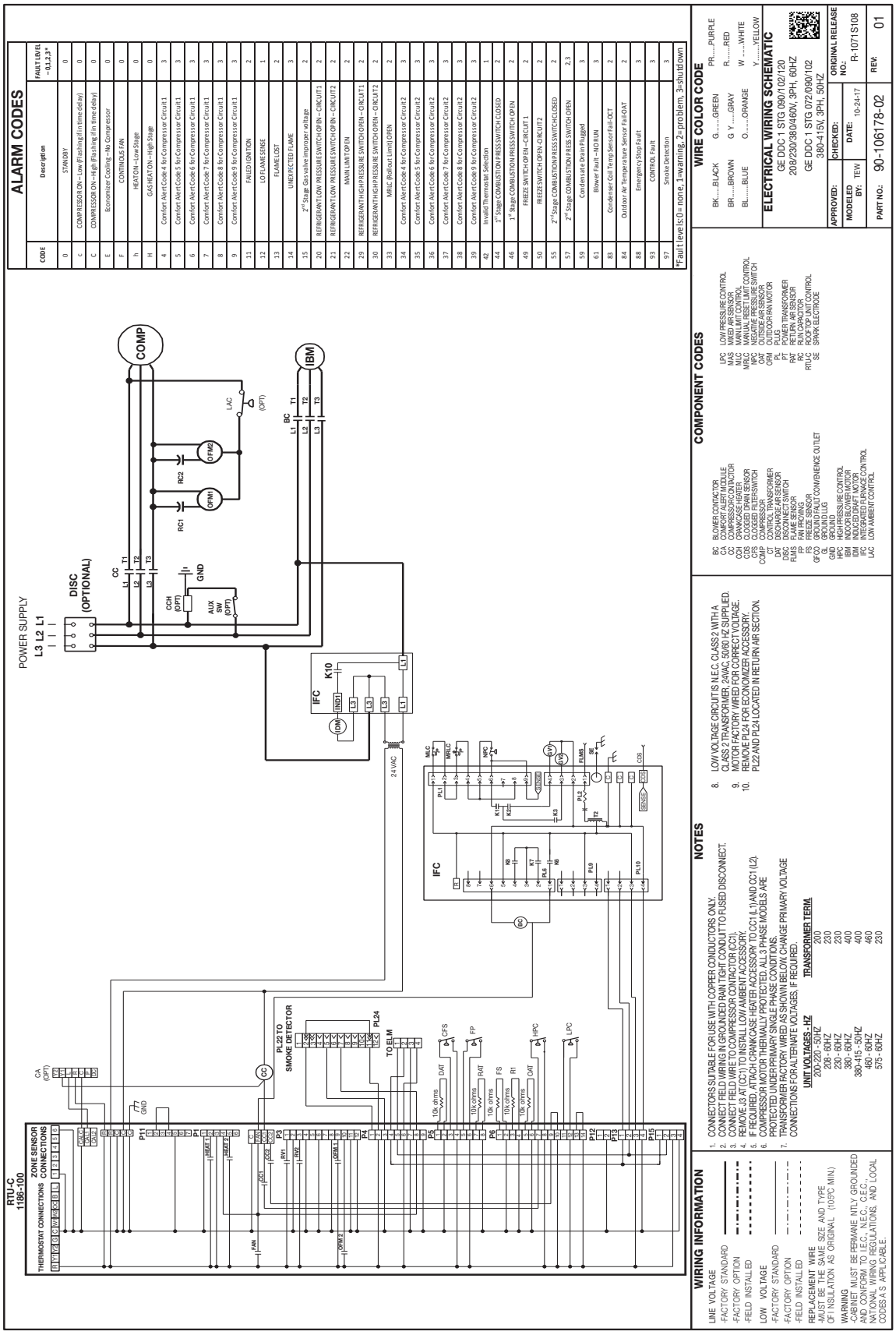

P. APPENDICES

Appendix G. Wiring Diagrams & Schematics (Cont.)

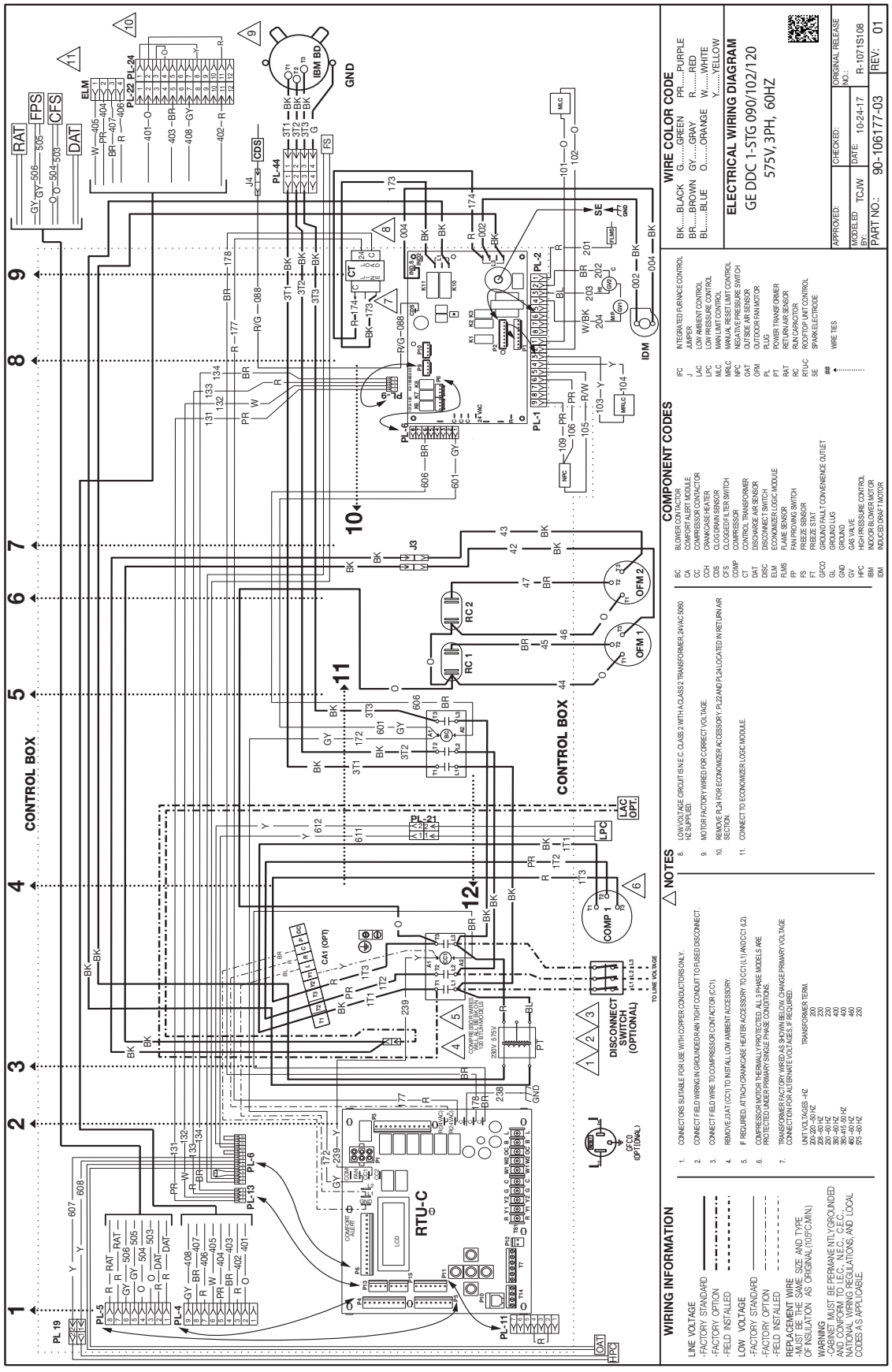

Appendix G. Wiring Diagrams & Schematics (Cont.)

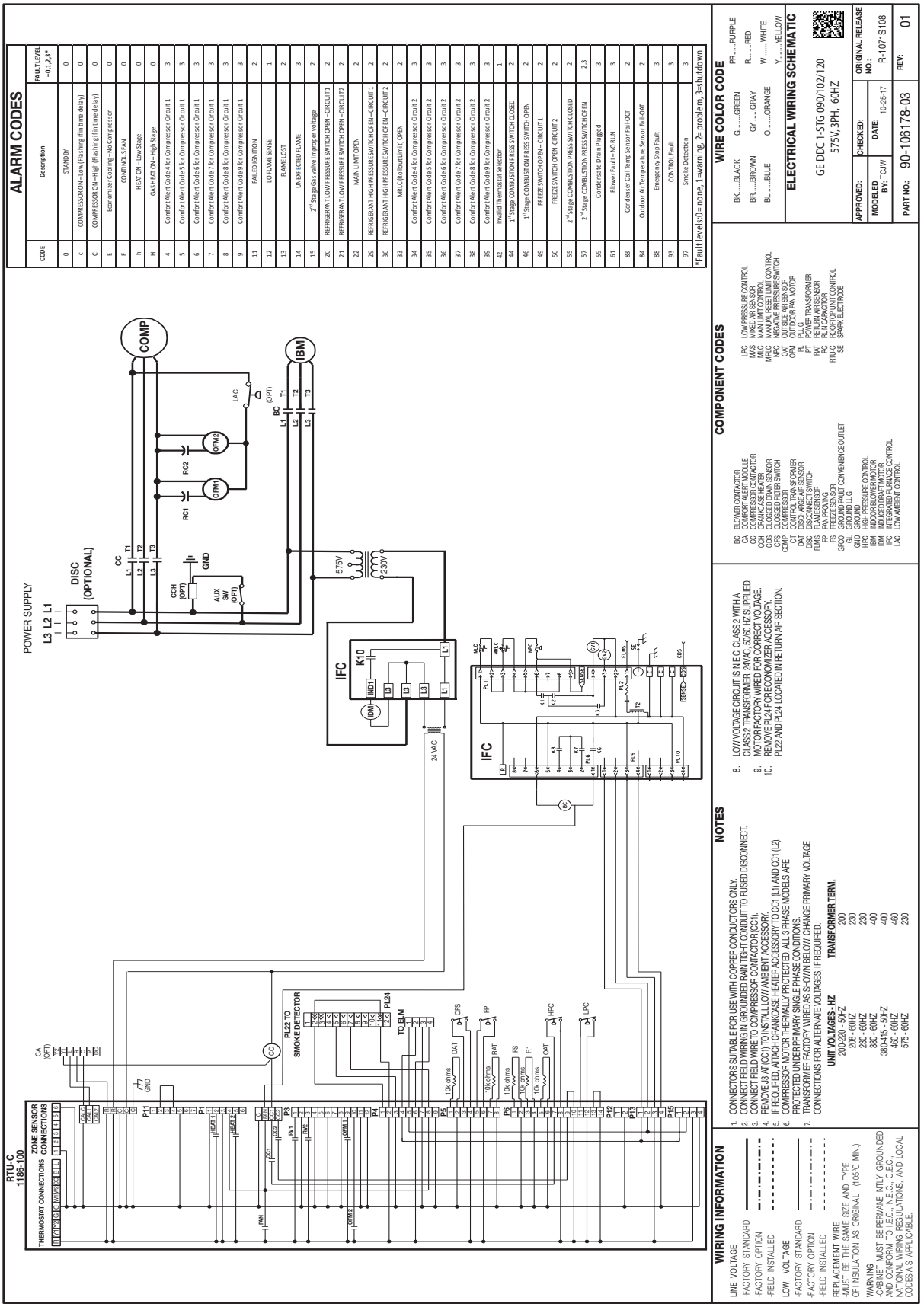

P. APPENDICES

Appendix G. Wiring Diagrams & Schematics (Cont.)

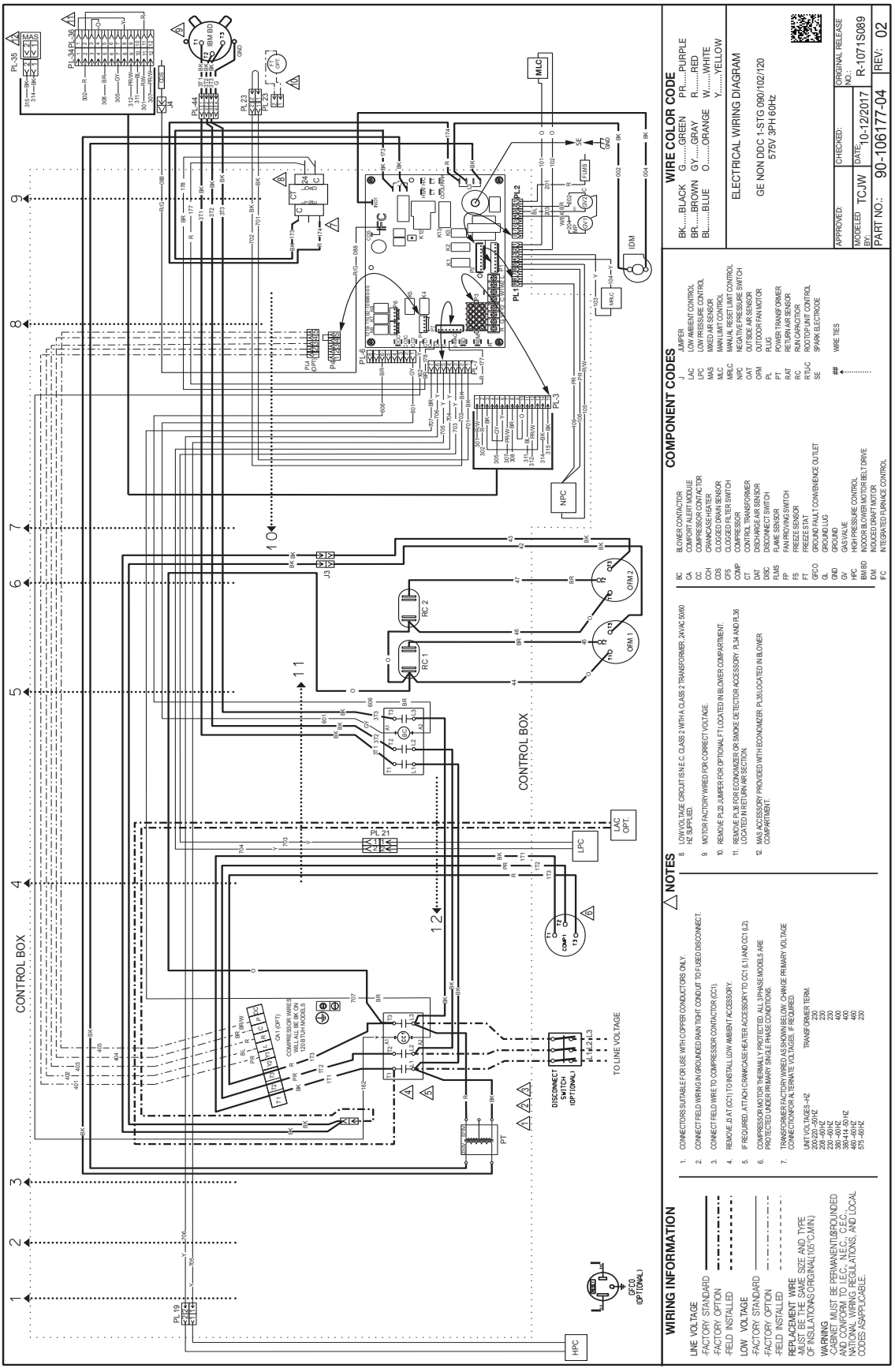

WIRING INFORMATION

LINE VOLTAGE
-FACTORY STANDARD
-FACTORY OPTION
-FIELD INSTALLED

LOW VOLTAGE
-FACTORY STANDARD
-FACTORY OPTION
-FIELD INSTALLED

REPLACEMENT WIRE
-MUST BE THE SAME SIZE AND TYPE OF INSULATION AS ORIGINAL(105°C MIN.)

WARNING
-CABINET MUST BE PERMANENTLY GROUNDED AND CONFORM TO N.E.C. AND C.E.C. NATIONAL WIRING REGULATIONS, AND LOCAL CODES AS APPLICABLE.

NOTES

1. CONNECTORS SUITABLE FOR USE WITH COPPER CONDUCTORS ONLY.
2. CONNECT FIELD WIRING IN GROUNDED RAIN TIGHT CONDUIT TO FUSED DISCONNECT.
3. CONNECT FIELD WIRE TO COMPRESSOR CONTACTOR (CC1).
4. REMOVE J8 AT (CC1) TO INSTALL LOW AMBIENT ACCESSORY.
5. IF REQUIRED, ATTACH CRANKCASE HEATER ACCESSORY TO CC1 (L1) AND CC1 (L2).
6. COMPRESSOR MOTOR THERMALLY PROTECTED. ALL 3-PHASE MODELS ARE PROTECTED UNDER PRIMARY SINGLE PHASE CONDITIONS.
7. TRANSFORMER FACTORY WIRED AS SHOWN BELOW. CHANGE PRIMARY VOLTAGE CONNECTION FOR ALTERNATE VOLTAGES, IF REQUIRED.

UNIT VOLTAGES--HZ	TRANSFORMER TERM.
200-220--50HZ	220
208--60HZ	230
220--60HZ	240
380--60HZ	400
380-415--50HZ	400
460--60HZ	460
575--60HZ	200

8. LOW VOLTAGE CIRCUIT IS N.E.C. CLASS 2 WITH A CLASS 2 TRANSFORMER, 24VAC 50/60 HZ SUPPLIED.
9. MOTOR FACTORY WIRED FOR CORRECT VOLTAGE.
10. REMOVE PL20 JUMPER FOR OPTIONAL FT LOCATED IN BLOWER COMPARTMENT.
11. REMOVE PL36 FOR ECONOMIZER OR SMOKE DETECTOR ACCESSORY. PL34 AND PL36 LOCATED IN RETURN AIR SECTION.
12. MAS ACCESSORY PROVIDED WITH ECONOMIZER. PL35 LOCATED IN BLOWER COMPARTMENT.

COMPONENT CODES

BC	BLOWER CONTACTOR
CA	COMFORT ALERT MODULE
CC	CONDENSER CONTACTOR
CCH	CRANKCASE HEATER
CDS	CLOGGED DRAIN SENSOR
CFS	CLOGGED FILTER SWITCH
COMP	COMPRESSOR
CT	CONTROL TRANSFORMER
DAT	DISCHARGE AIR SENSOR
DISC	DISCONNECT SWITCH
FLMS	FLAME SENSOR
FP	FAN PROVING SWITCH
FS	FREEZE SENSOR
FT	FREEZE STAT
GFCO	GROUND FAULT CONVENIENCE OUTLET
GL	GROUND LUG
GND	GROUND
GV	GAS VALVE
HPC	HIGH PRESSURE CONTROL
IDM	INDOOR DRIVE MOTOR/BELT DRIVE
IDM	INDUCED DRAFT MOTOR
IFC	INTEGRATED FURNACE CONTROL
J	JUMPER
LAC	LOW AMBIENT CONTROL
LPC	LOW PRESSURE CONTROL
MAS	MIXED AIR SENSOR
MAT	MIXED AIR CONTROL
MRLC	MANUAL RESET LIMIT CONTROL
NPC	NEGATIVE PRESSURE SWITCH
OAT	OUTSIDE AIR SENSOR
OFM	OUTDOOR FAN MOTOR
PL	PLUG
PT	POWER TRANSFORMER
RAT	RETURN AIR SENSOR
RC	RUN CAPACITOR
RTUC	ROOFTOP UNIT CONTROL
SE	SPARK ELECTRODE
##	WIRE TIES

Appendix G. Wiring Diagrams & Schematics (Cont.)

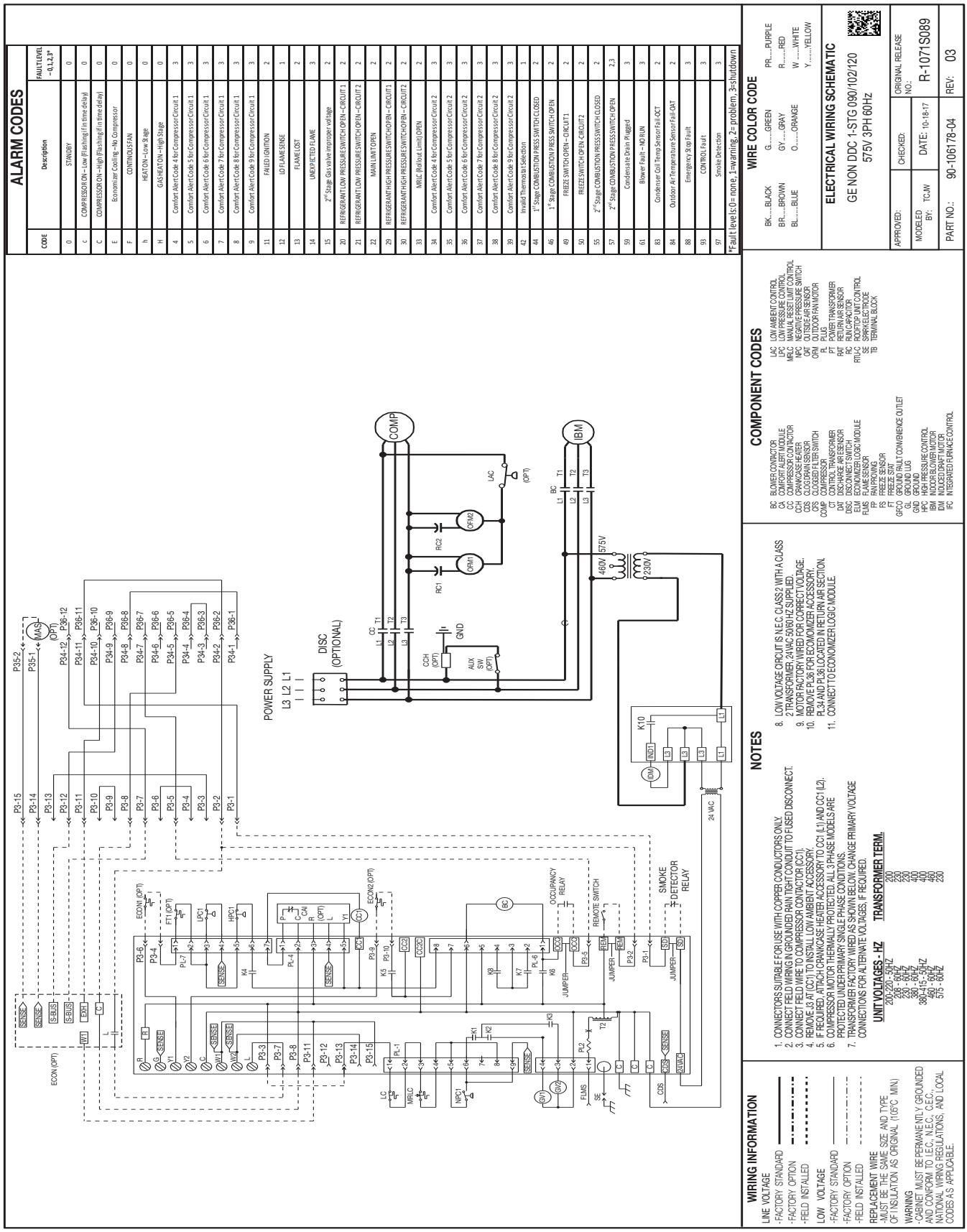

P. APPENDICES

Appendix G. Wiring Diagrams & Schematics (Cont.)

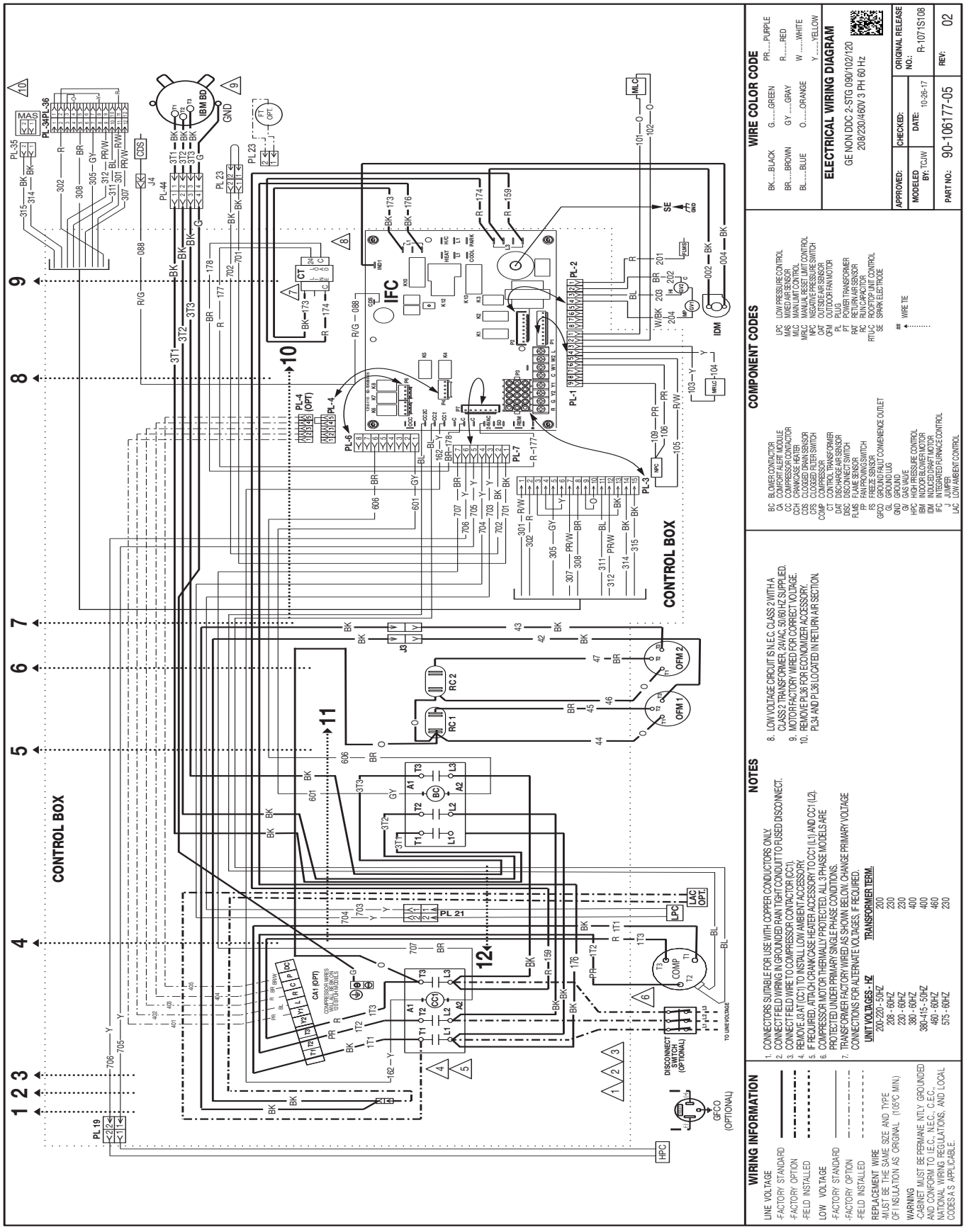

Appendix G. Wiring Diagrams & Schematics (Cont.)

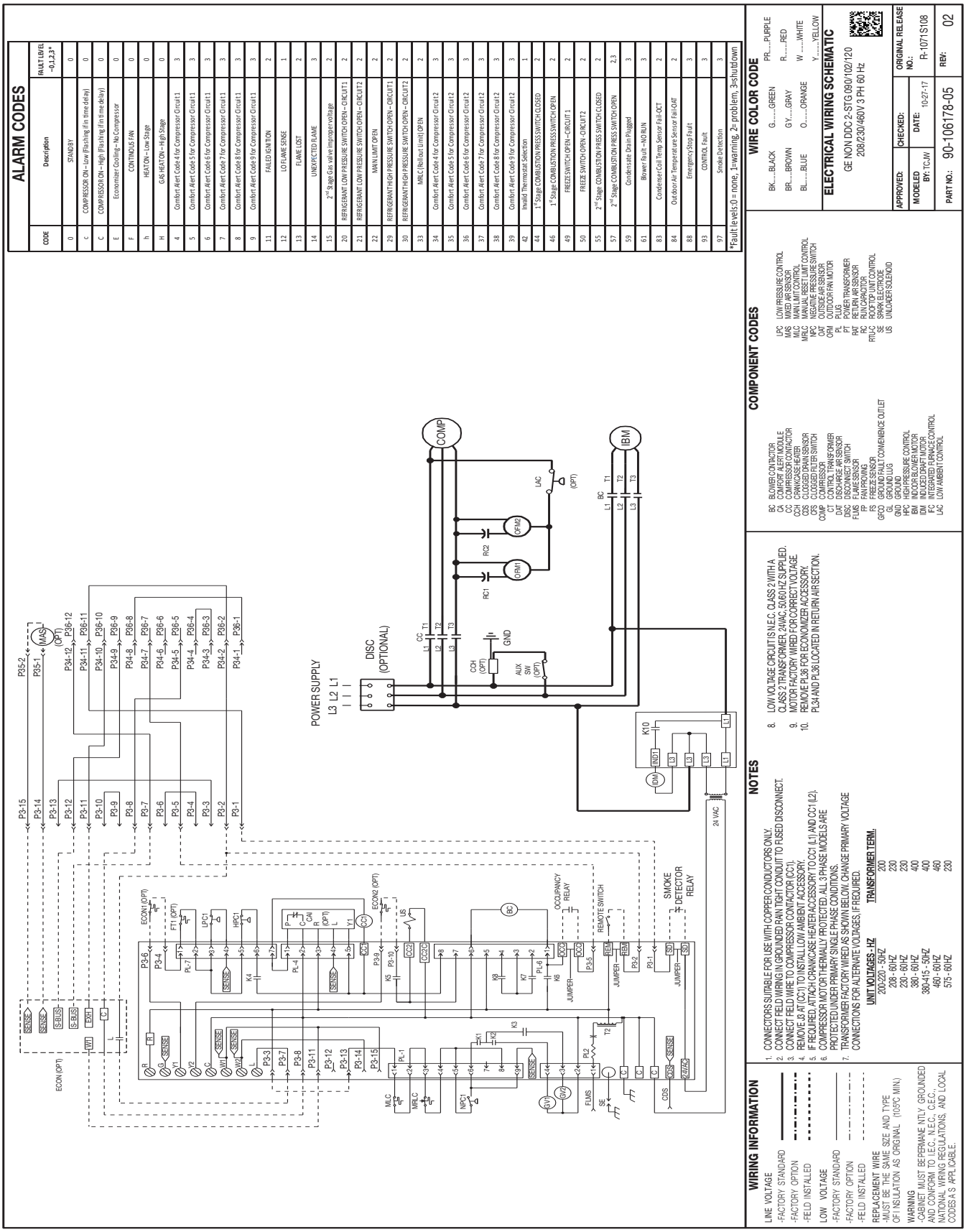

P. APPENDICES

Appendix G. Wiring Diagrams & Schematics (Cont.)

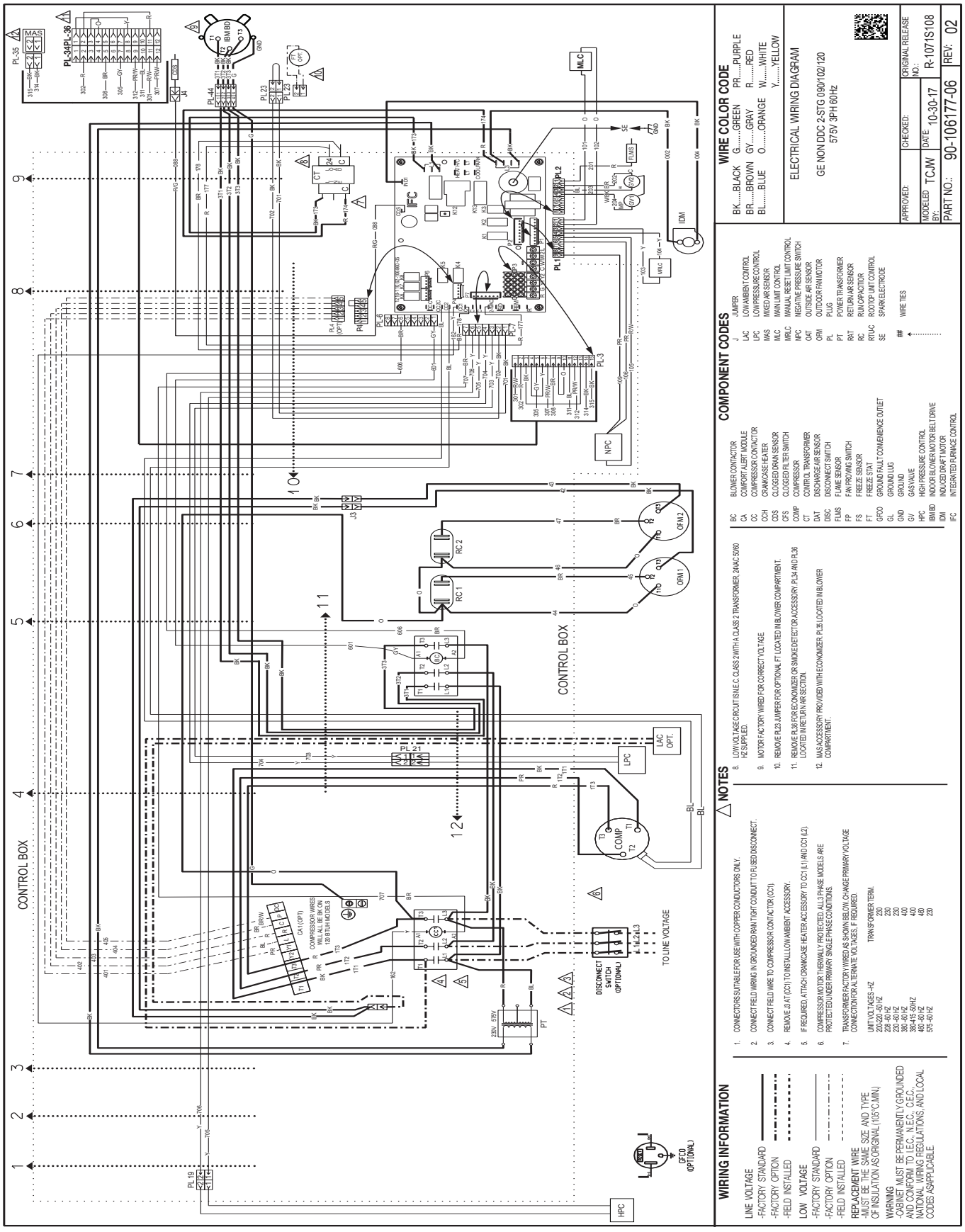

Appendix G. Wiring Diagrams & Schematics (Cont.)

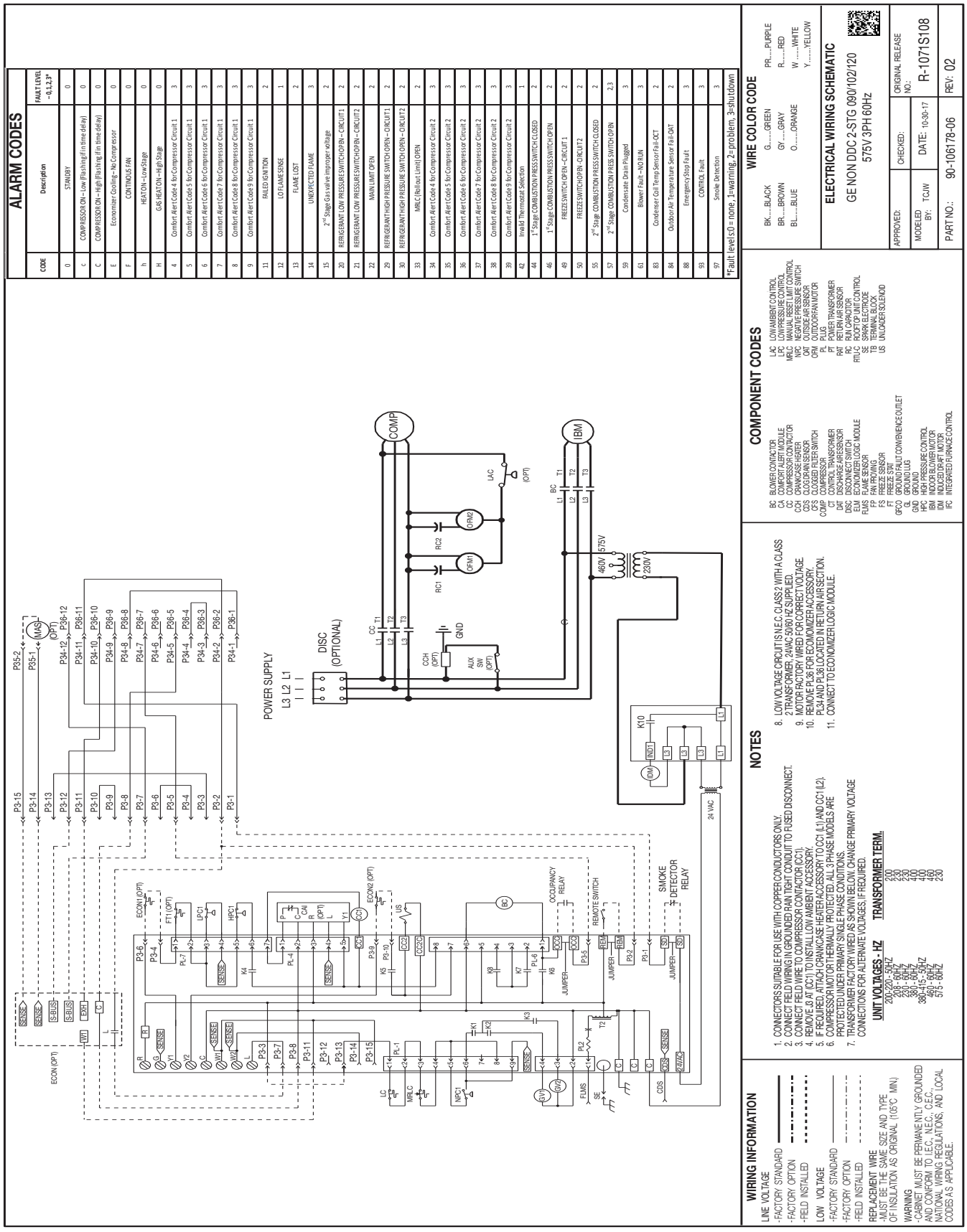

P. APPENDICES

Appendix G. Wiring Diagrams & Schematics (Cont.)

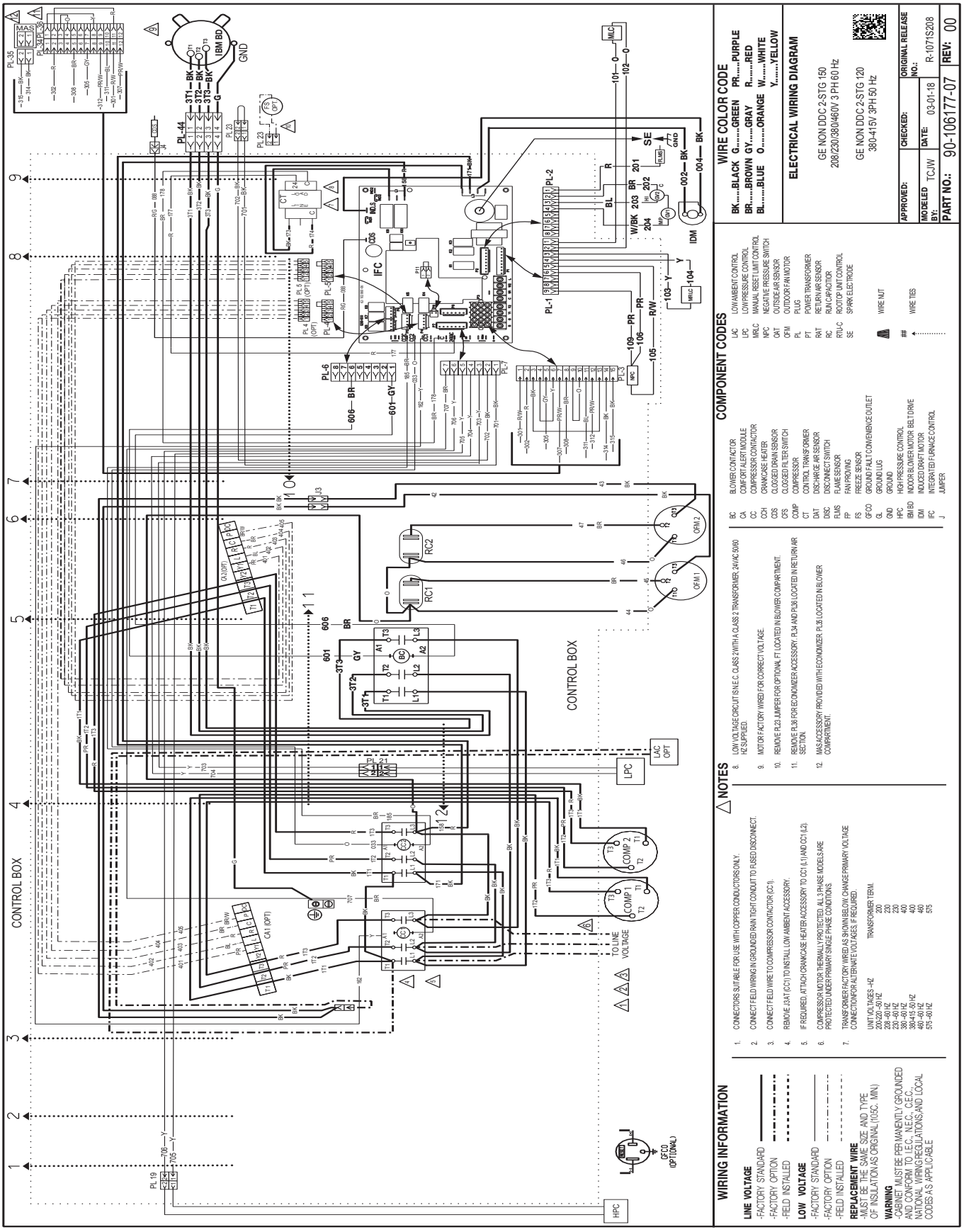

Appendix G. Wiring Diagrams & Schematics (Cont.)

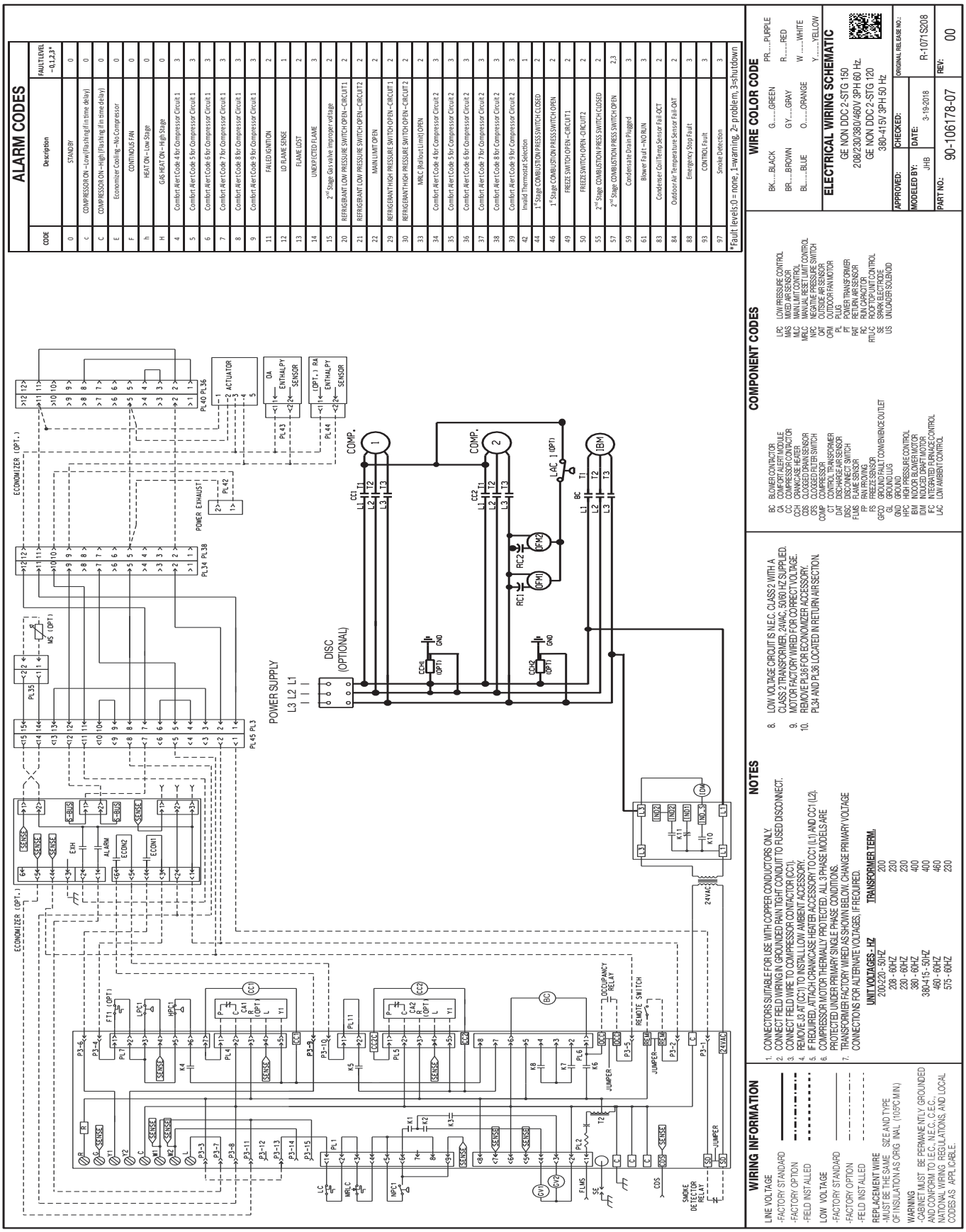

P. APPENDICES

Appendix G. Wiring Diagrams & Schematics (Cont.)

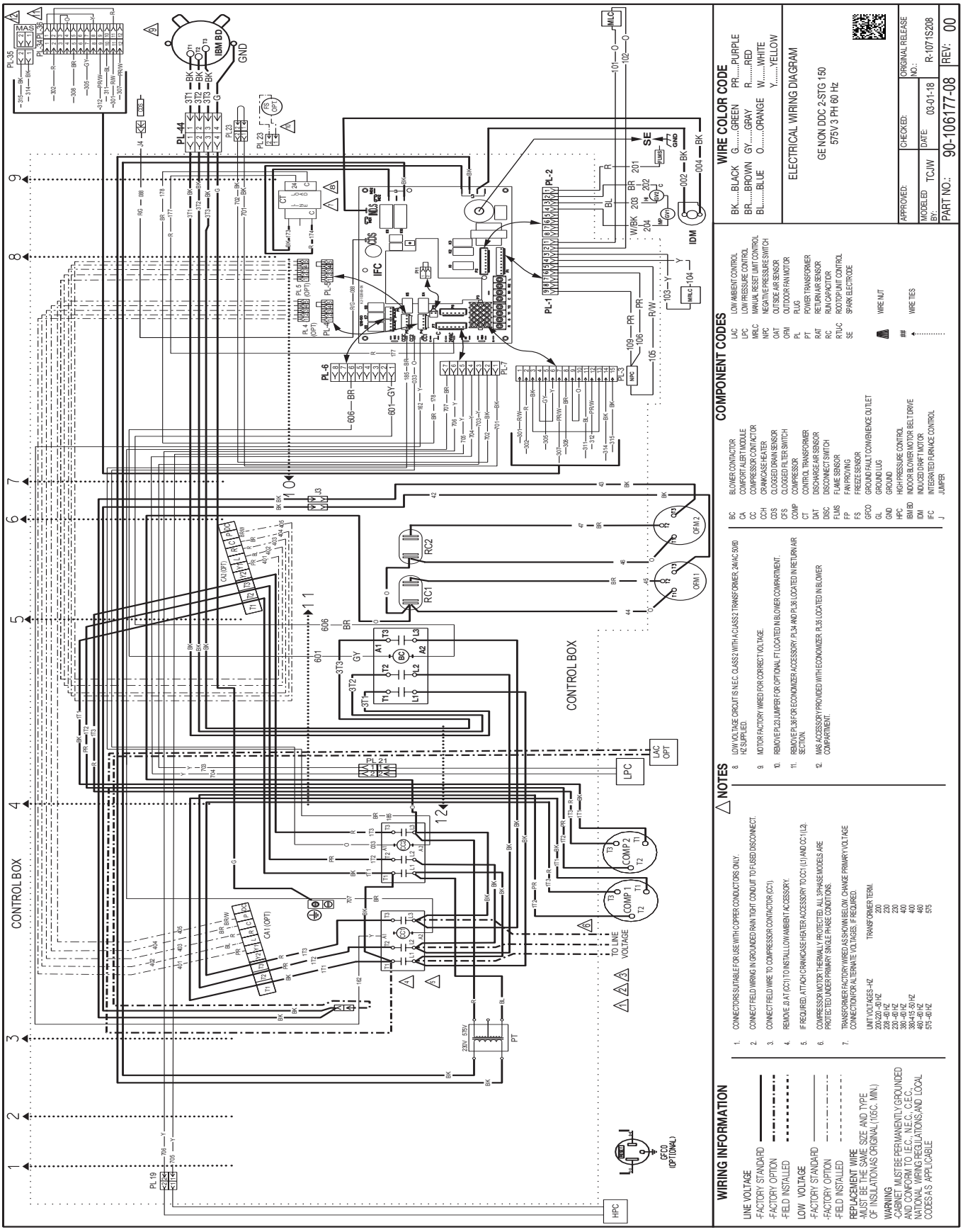

Appendix G. Wiring Diagrams & Schematics (Cont.)

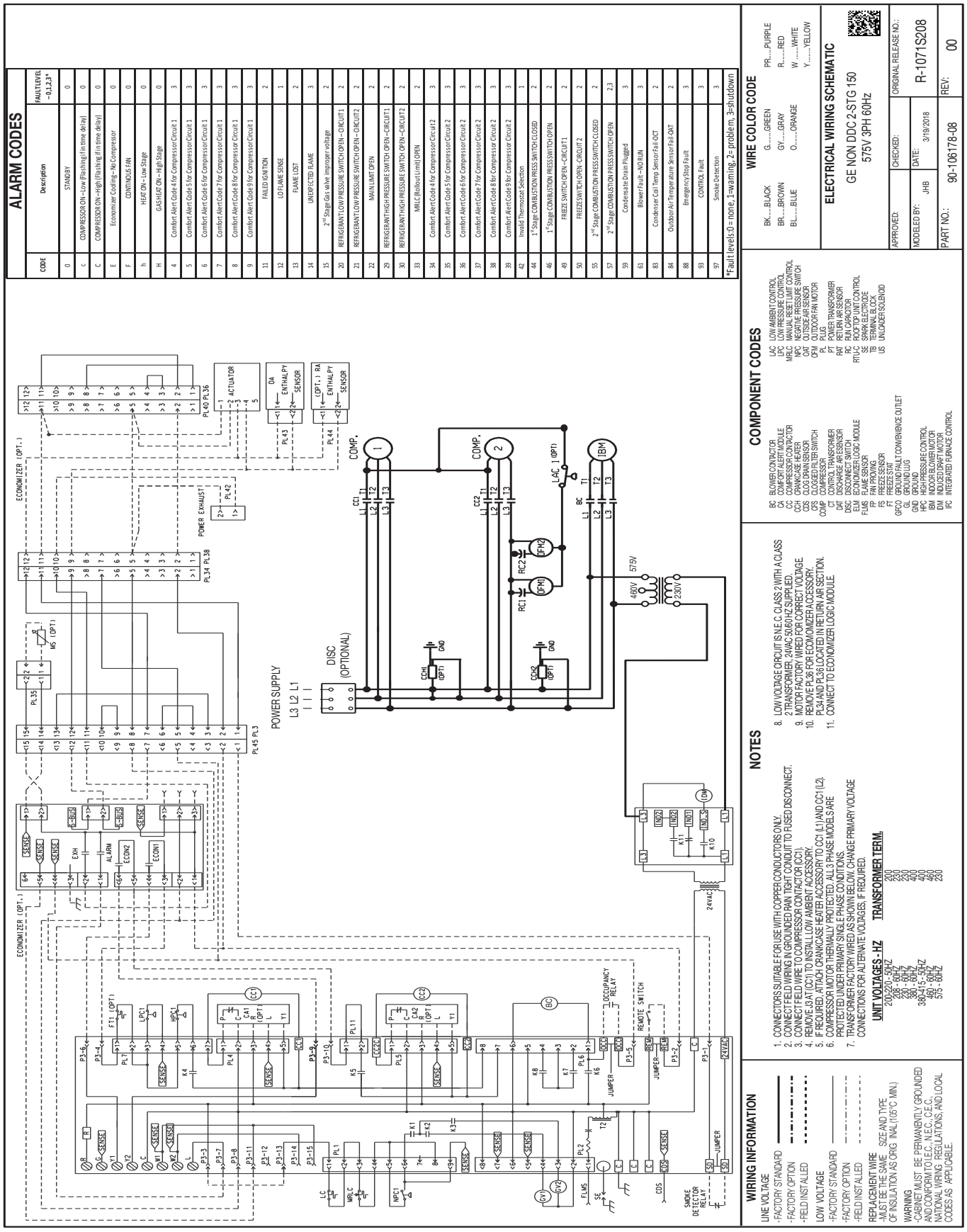

P. APPENDICES

Appendix G. Wiring Diagrams & Schematics (Cont.)

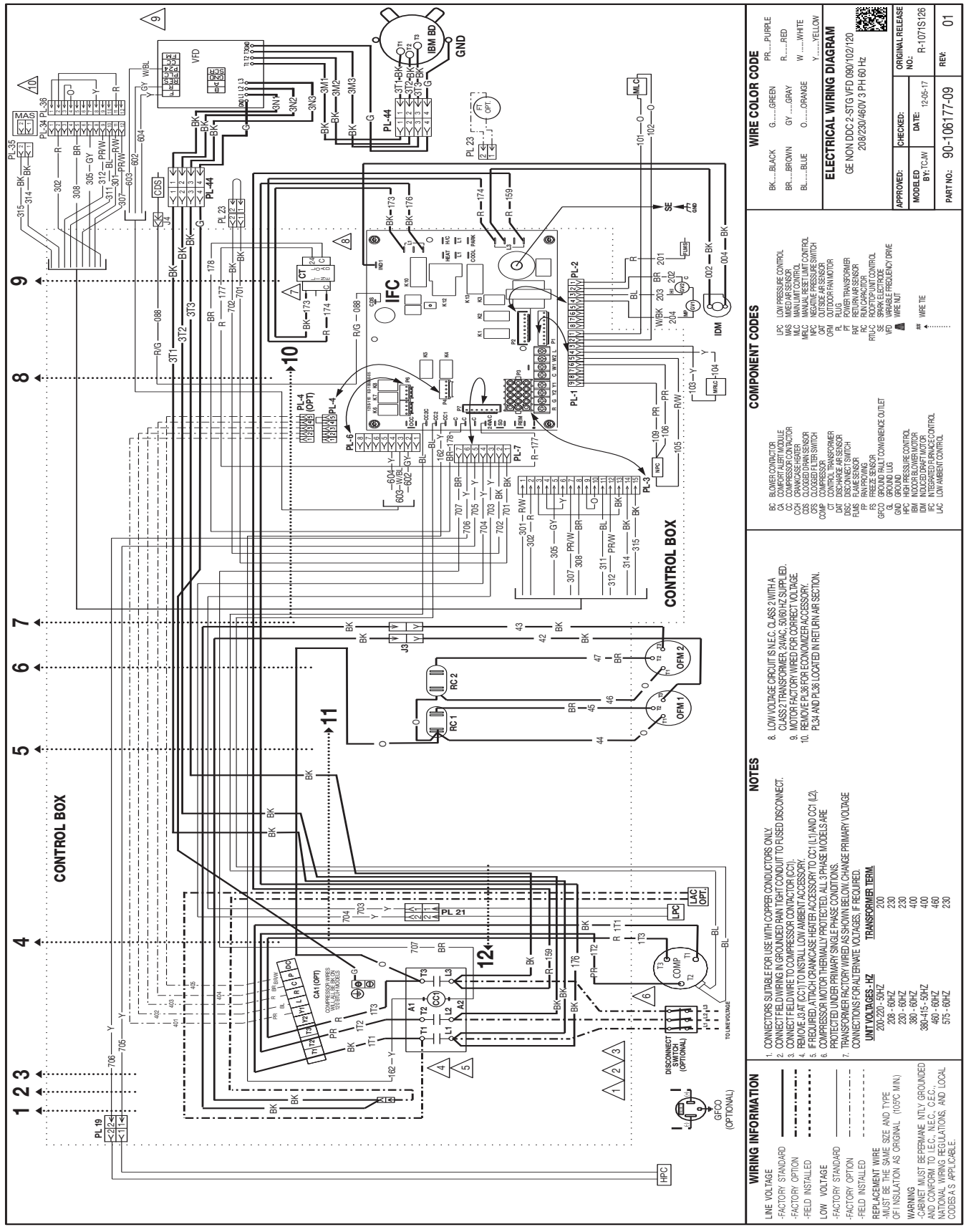

WIRING INFORMATION

LINE VOLTAGE
-FACTORY STANDARD
-FACTORY OPTION
-FIELD INSTALLED

LOW VOLTAGE
-FACTORY STANDARD
-FACTORY OPTION
-FIELD INSTALLED

REPLACEMENT WIRE
-MUST BE THE SAME SIZE AND TYPE OF INSULATION AS ORIGINAL (105°C MIN.)

WARNING
-CABINET MUST BE PERMANENTLY GROUNDED AND CONFORM TO I.E.C., N.E.C., C.E.C., NATIONAL WIRING REGULATIONS, AND LOCAL CODES AS APPLICABLE.

NOTES

1. CONNECTORS SUITABLE FOR USE WITH COPPER CONDUCTORS ONLY.
2. CONNECT FIELD WIRING IN GROUNDED PAN TIGHT CONDUIT TO FUSED DISCONNECT.
3. CONNECT FIELD WIRE TO COMPRESSOR CONTACTOR (CC1).
4. REMOVE JUMPER (JA) FROM CCH TO INSTALL LOW AMBIENT ACCESSORY.
5. IF REQUIRED, ATTACH CRANKCASE HEATER ACCESSORY TO CC1 (L1) AND CC1 (L2).
6. COMPRESSOR MOTOR THERMALLY PROTECTED. ALL 3 PHASE MODELS ARE PROTECTED UNDER PRIMARY SINGLE PHASE CONDITIONS.
7. TRANSFORMER FACTORY WIRED AS SHOWN BELOW. CHANGE PRIMARY VOLTAGE CONNECTIONS FOR ALTERNATE VOLTAGES, IF REQUIRED.

UNIT VOLTAGES - HZ	TRANSFORMER TERM.
200-220 - 50HZ	200
208 - 60HZ	230
230 - 60HZ	230
380 - 60HZ	400
380-415 - 50HZ	400
460 - 60HZ	460
575 - 60HZ	230

8. LOW VOLTAGE CIRCUIT IS N.E.C. CLASS 2 WITH A CLASS 2 TRANSFORMER. 24VAC, 50/60 HZ SUPPLIED.
9. MOTOR FACTORY WIRED FOR CORRECT VOLTAGE
10. REMOVE PL36 FOR ECONOMIZER ACCESSORY. PL34 AND PL36 LOCATED IN RETURN AIR SECTION.

COMPONENT CODES

BC	BLOWER CONTACTOR
CA	COMFORT ALERT MODULE
CC	COMPRESSOR CONTACTOR
CCH	CRANKCASE HEATER
CDS	CLOGGED DRAIN SENSOR
CFS	CLOGGED FILTER SWITCH
COMP	COMPRESSOR
CT	CONTROL TRANSFORMER
DAT	DISCHARGE AIR SENSOR
DSS	DOOR SAFETY SWITCH
FLMS	FLAME SENSOR
FP	RAIN PROVING
FS	FREEZE SENSOR
GFCO	GROUND FAULT CONVENIENCE OUTLET
GL	GROUND LUG
GRD	GROUND
HPC	HIGH PRESSURE CONTROL
IBM	INDOOR BLOWER MOTOR
IDM	INDUCED DRAFT MOTOR
IFC	INTEGRATED FURNACE CONTROL
LAC	LOW AMBIENT CONTROL
LPC	LOW PRESSURE CONTROL
LSAT	LEAVING SUPPLY AIR TEMP.
MLC	MAIN LIMIT CONTROL
MRLC	MANUAL RESET LIMIT CONTROL
NPC	NEGATIVE PRESSURE SWITCH
OAT	OUTSIDE AIR SENSOR
OFM	OUTDOOR FAN MOTOR
PL	PLUG
PT	POWER TRANSFORMER
RAT	RETURN AIR SENSOR
RC	RUN CAPACITOR
RTUC	ROOFTOP UNIT CONTROL
SE	SPARK ELECTRODE
VFD	VARIABLE FREQUENCY DRIVE
	WIRE NUT
##	WIRE TIE

WIRE COLOR CODE

BK....BLACK	G.....GREEN	PR....PURPLE	
BR....BROWN	GY ....GRAY	R.....RED	
BL.....BLUE	O.....ORANGE	W .....WHITE	
		Y.....YELLOW	

ELECTRICAL WIRING DIAGRAM

GE NON DDC 2-STG VFD 090/102/120
208/230/460V 3 PH 60 Hz

APPROVED:	CHECKED:	ORIGINAL RELEASE
MODLED BY: TC.JW	DATE: 12-05-17	NO: R-1071S126
PART NO: 90-106177-09	REV: 01	

Appendix G. Wiring Diagrams & Schematics (Cont.)

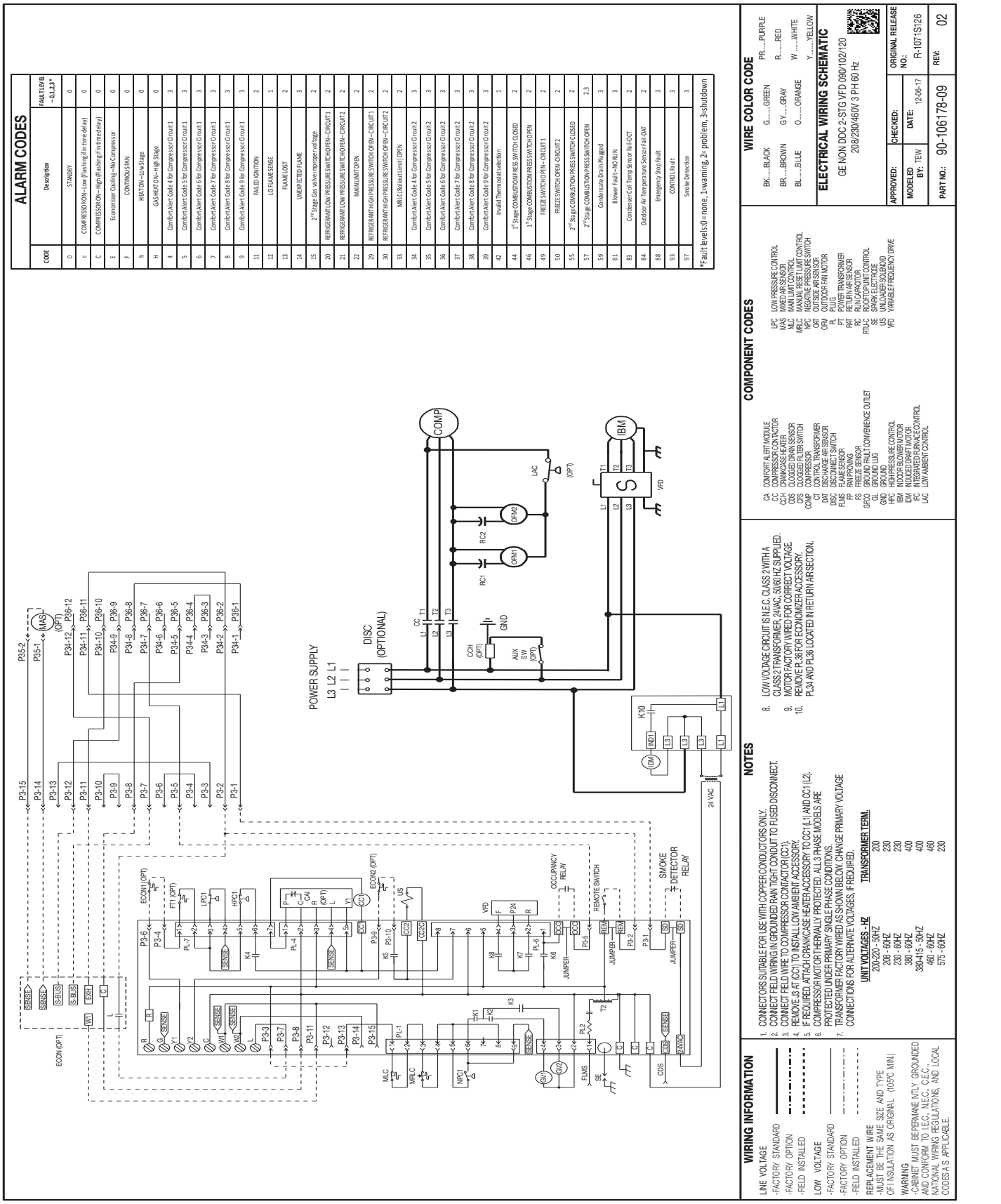

P. APPENDICES

Appendix G. Wiring Diagrams & Schematics (Cont.)

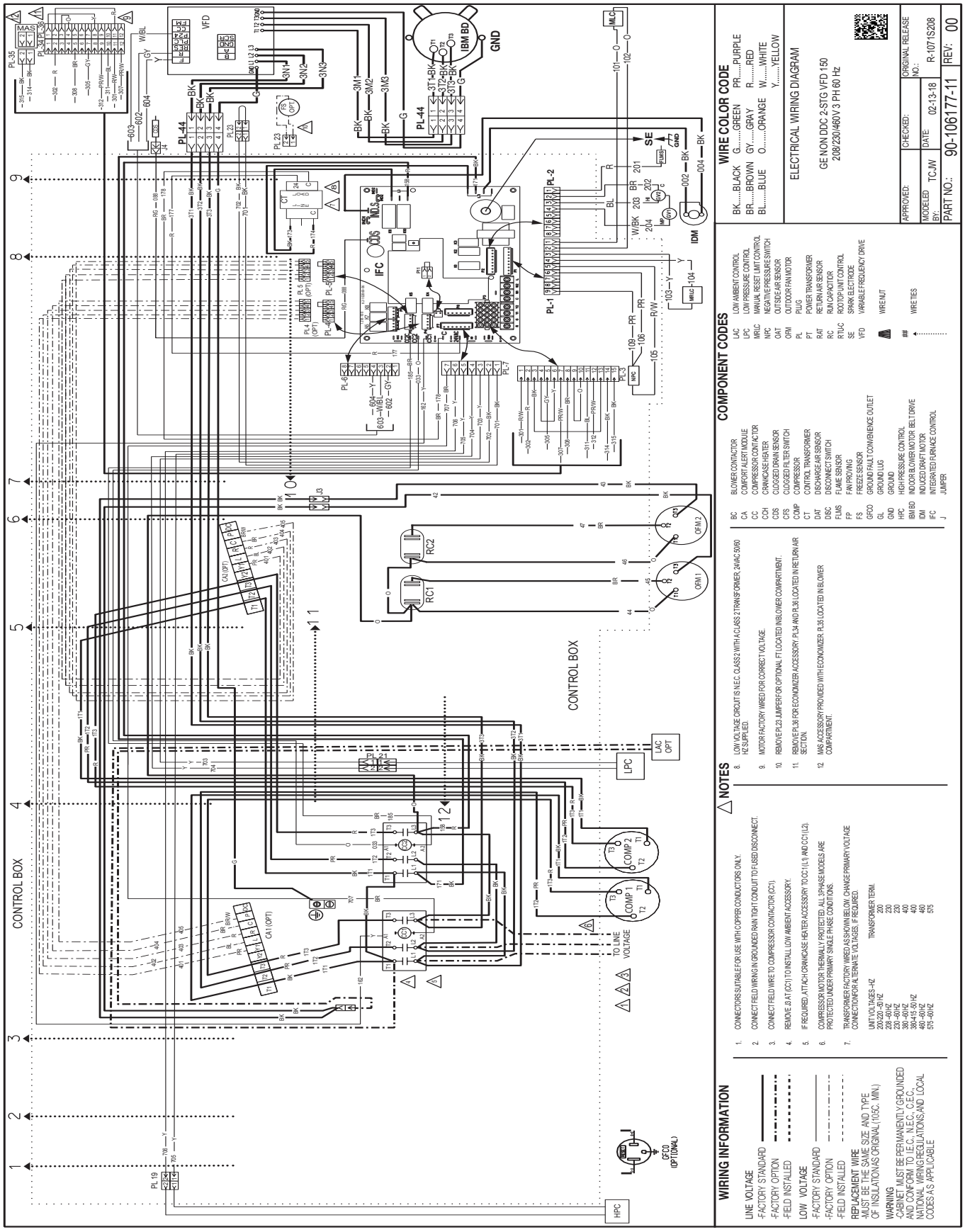

Appendix G. Wiring Diagrams & Schematics (Cont.)

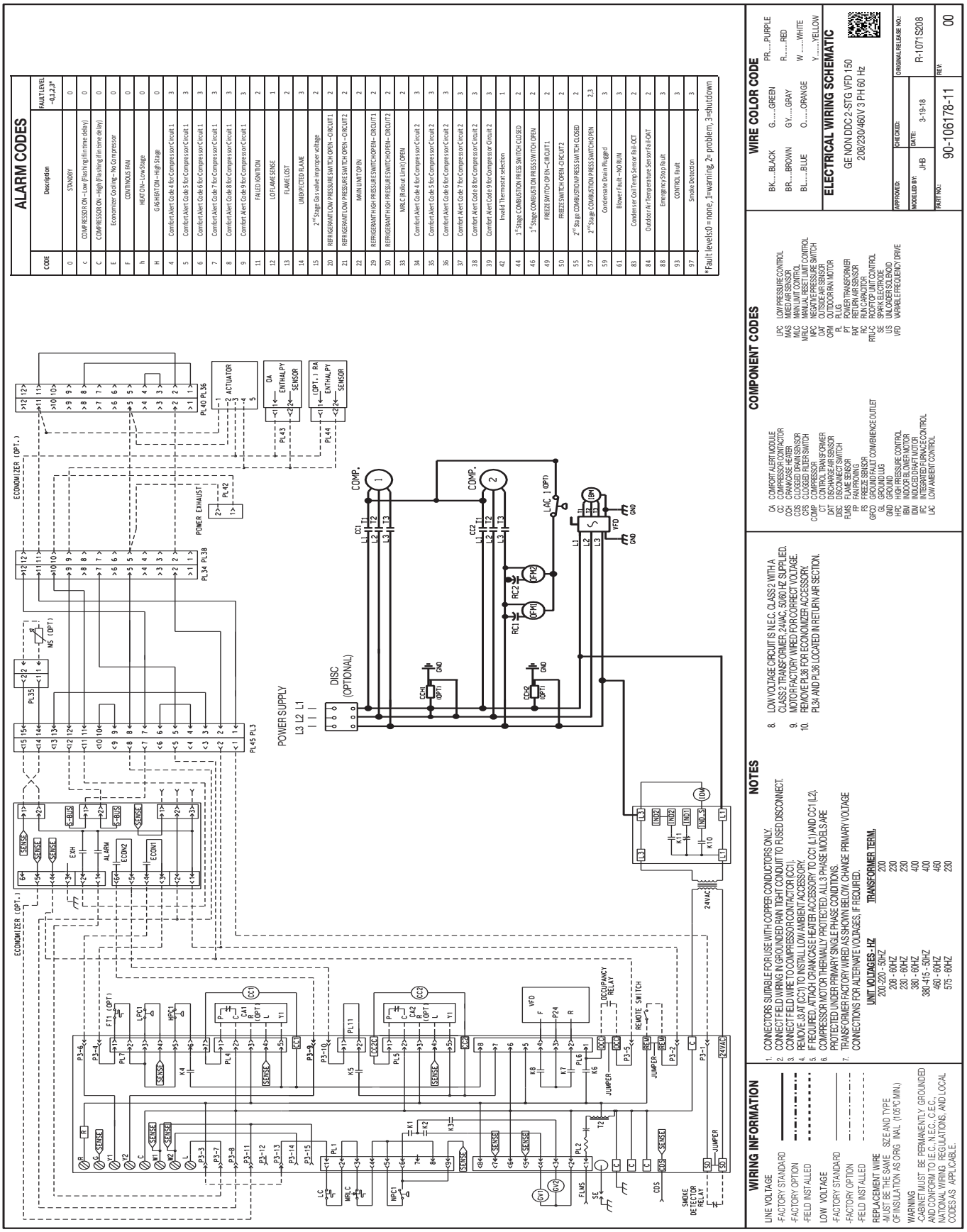

P. APPENDICES

Appendix G. Wiring Diagrams & Schematics (Cont.)

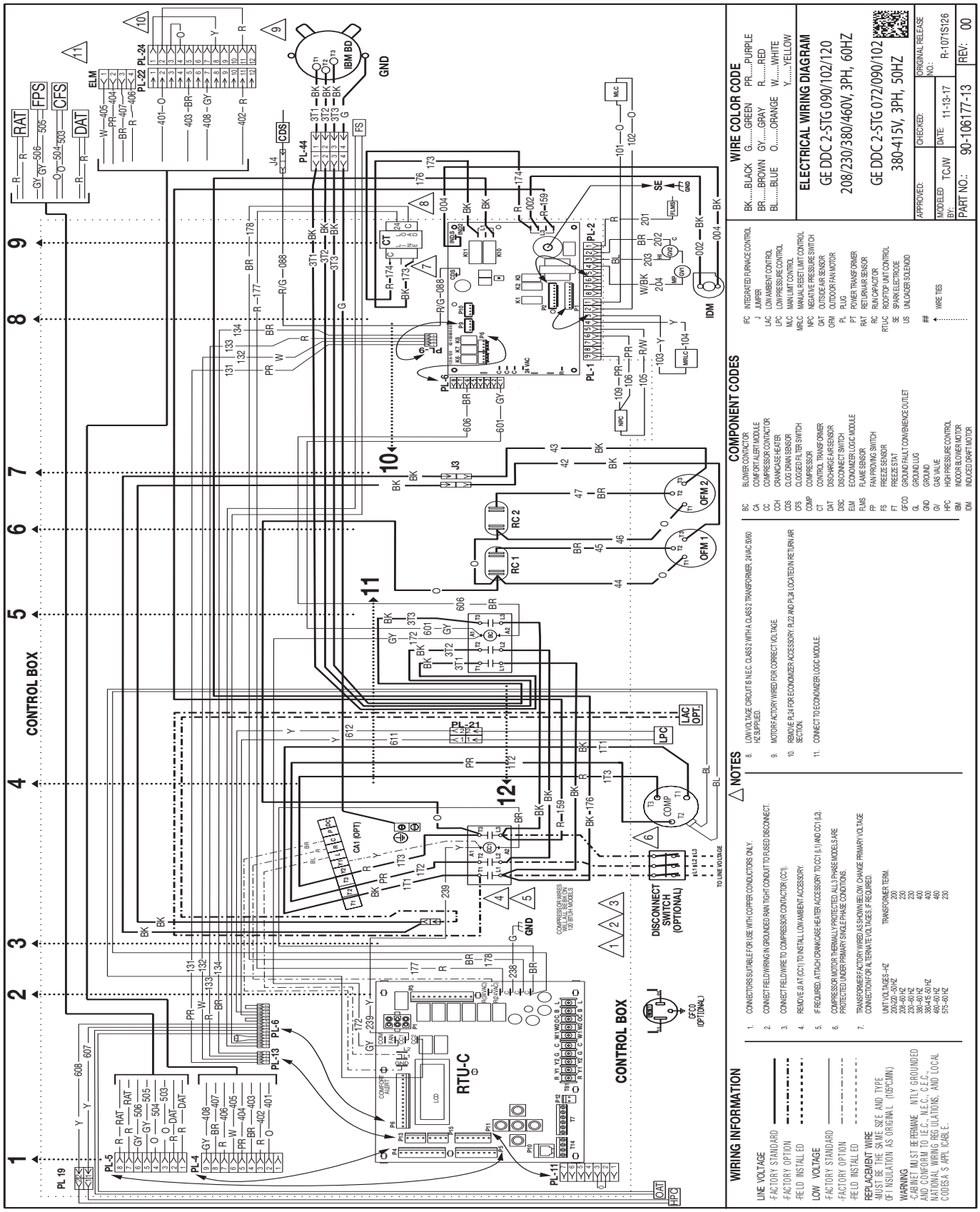

Appendix G. Wiring Diagrams & Schematics (Cont.)

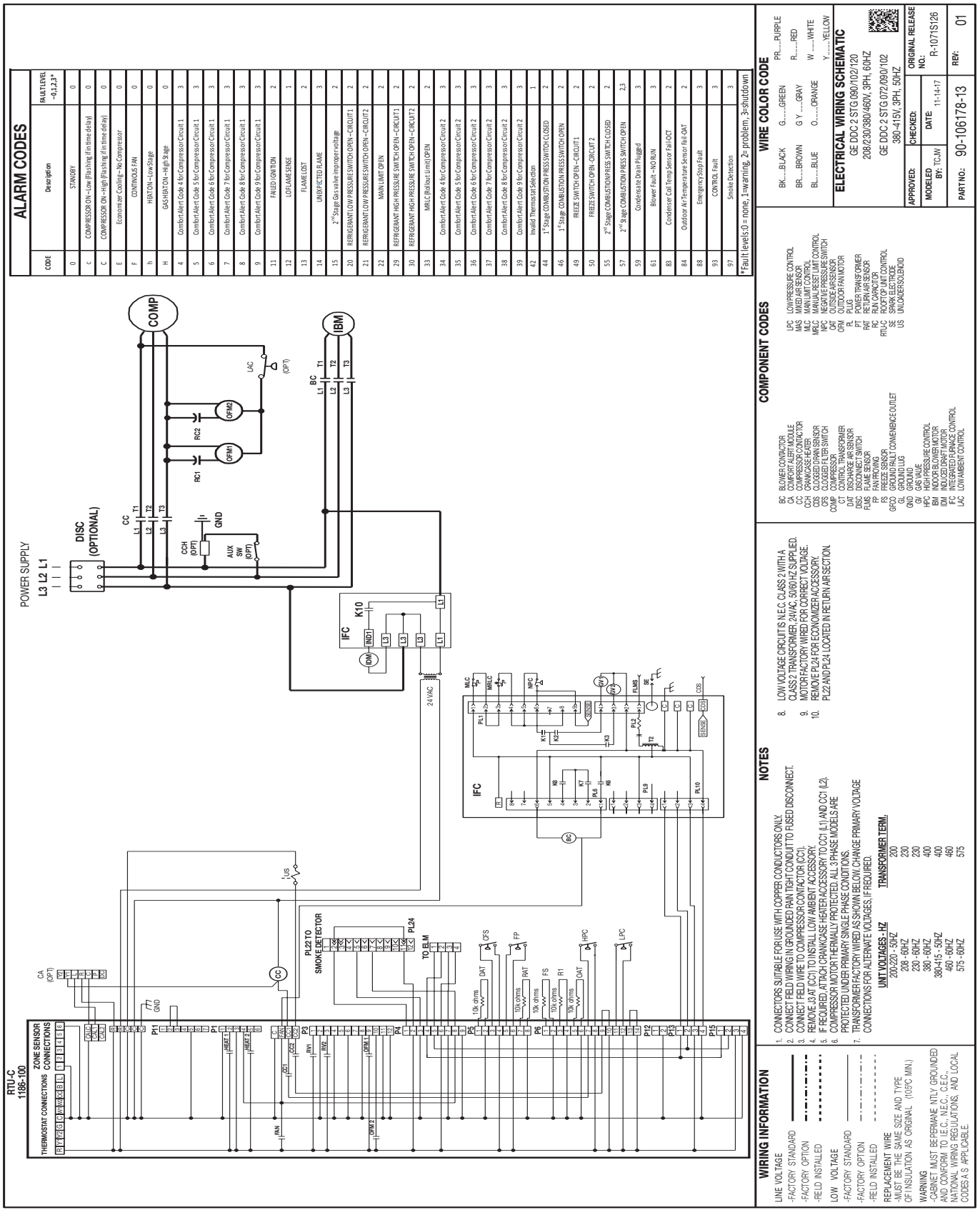

P. APPENDICES

Appendix G. Wiring Diagrams & Schematics (Cont.)

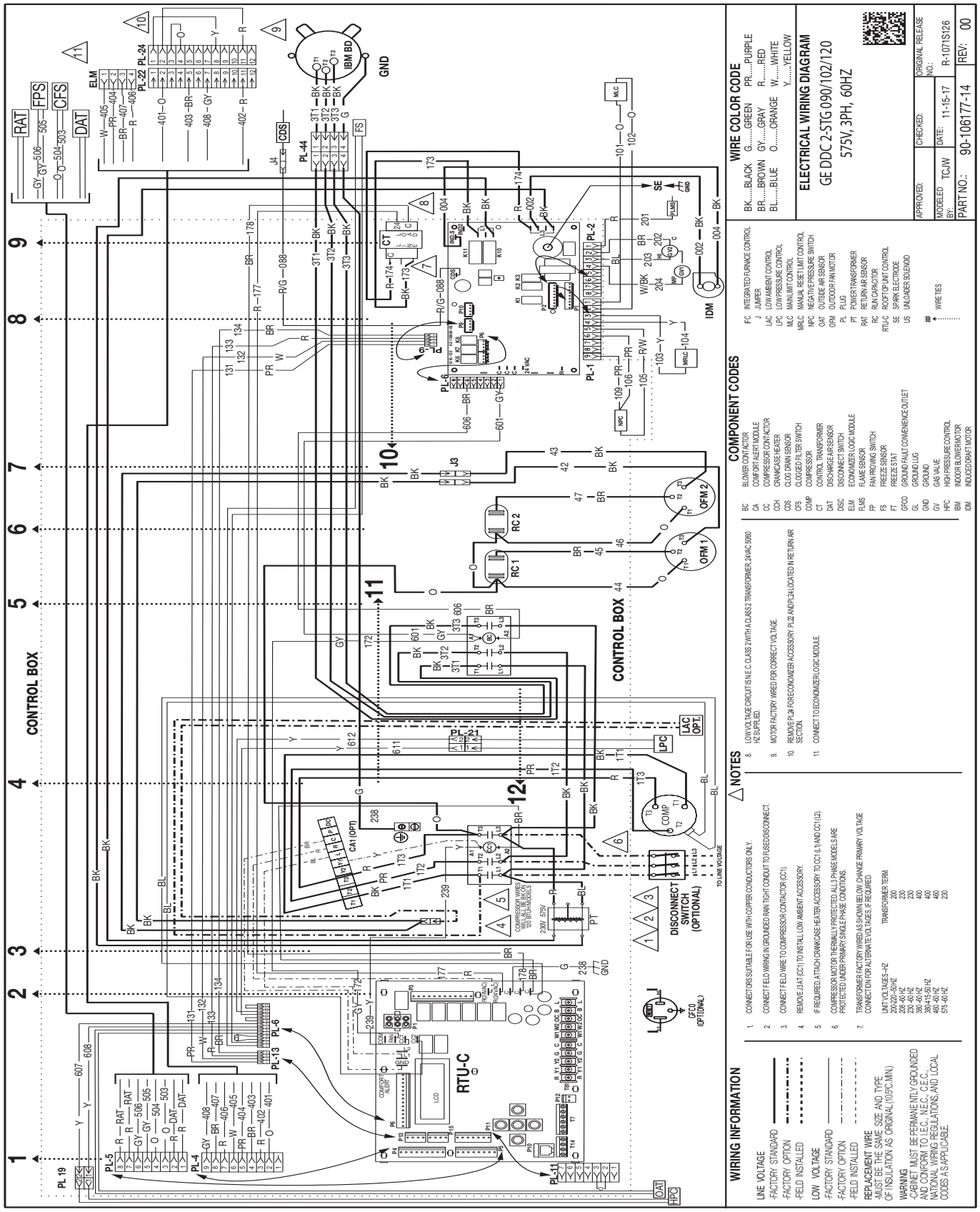

Appendix G. Wiring Diagrams & Schematics (Cont.)

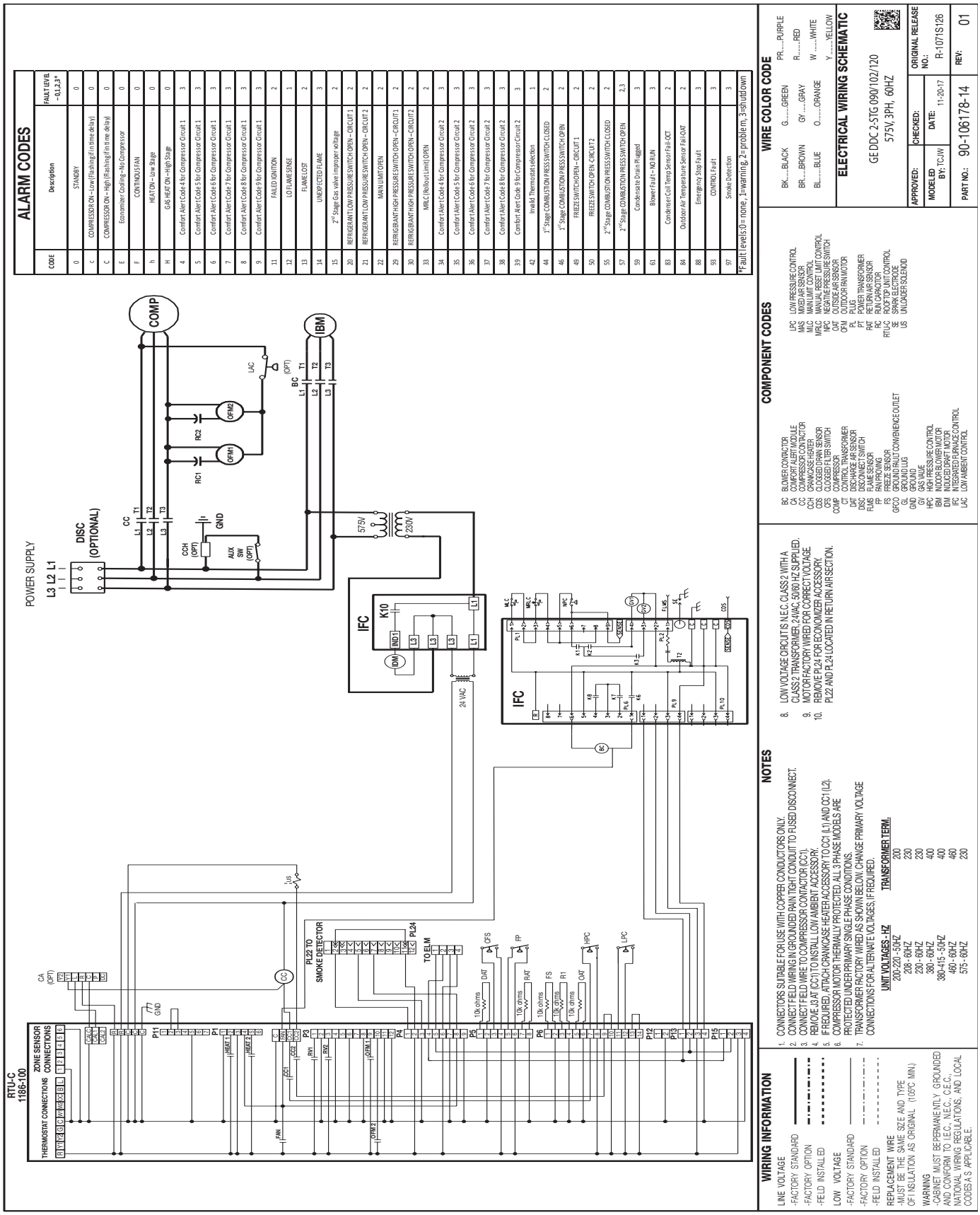

P. APPENDICES

Appendix G. Wiring Diagrams & Schematics (Cont.)

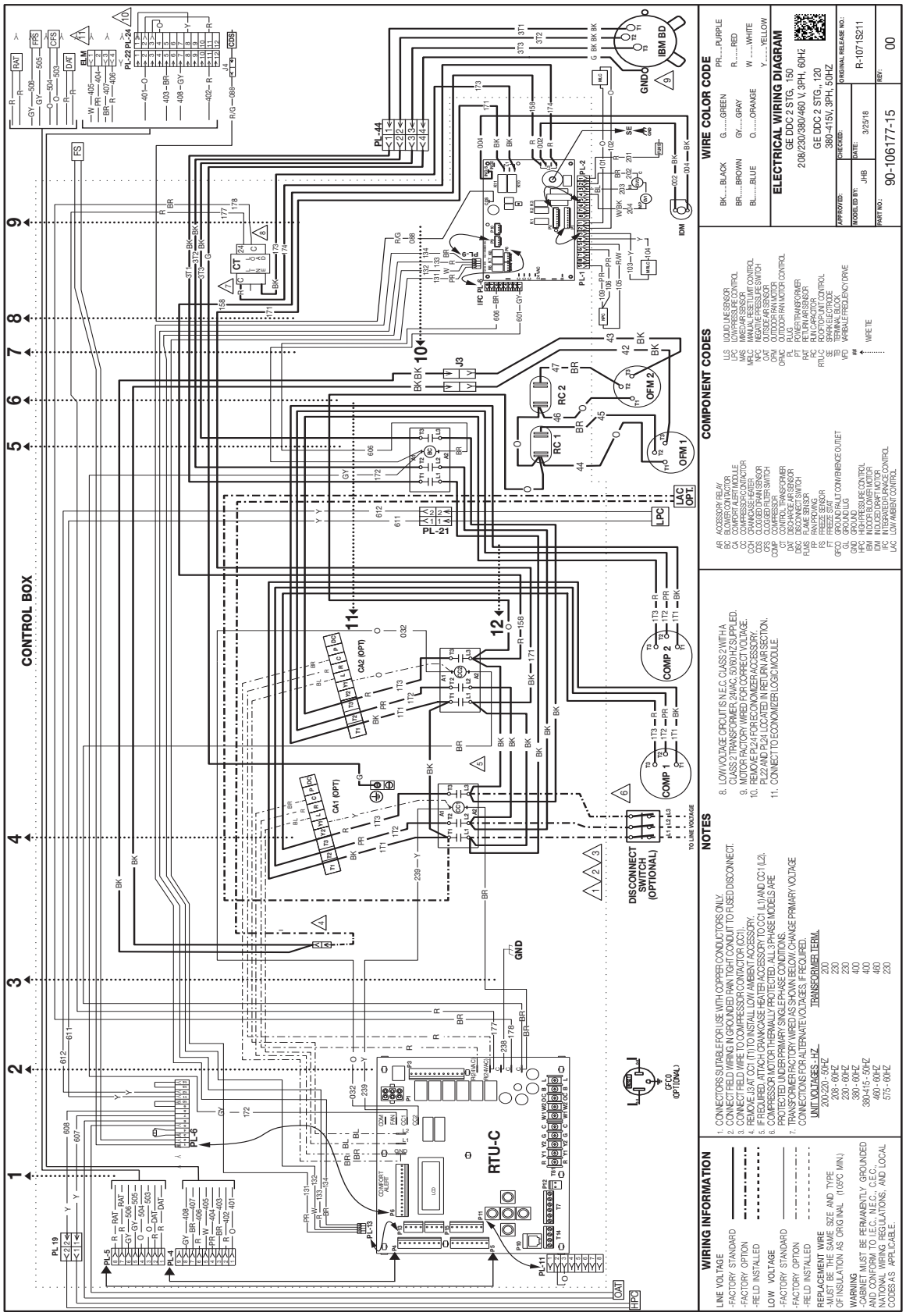

Appendix G. Wiring Diagrams & Schematics (Cont.)

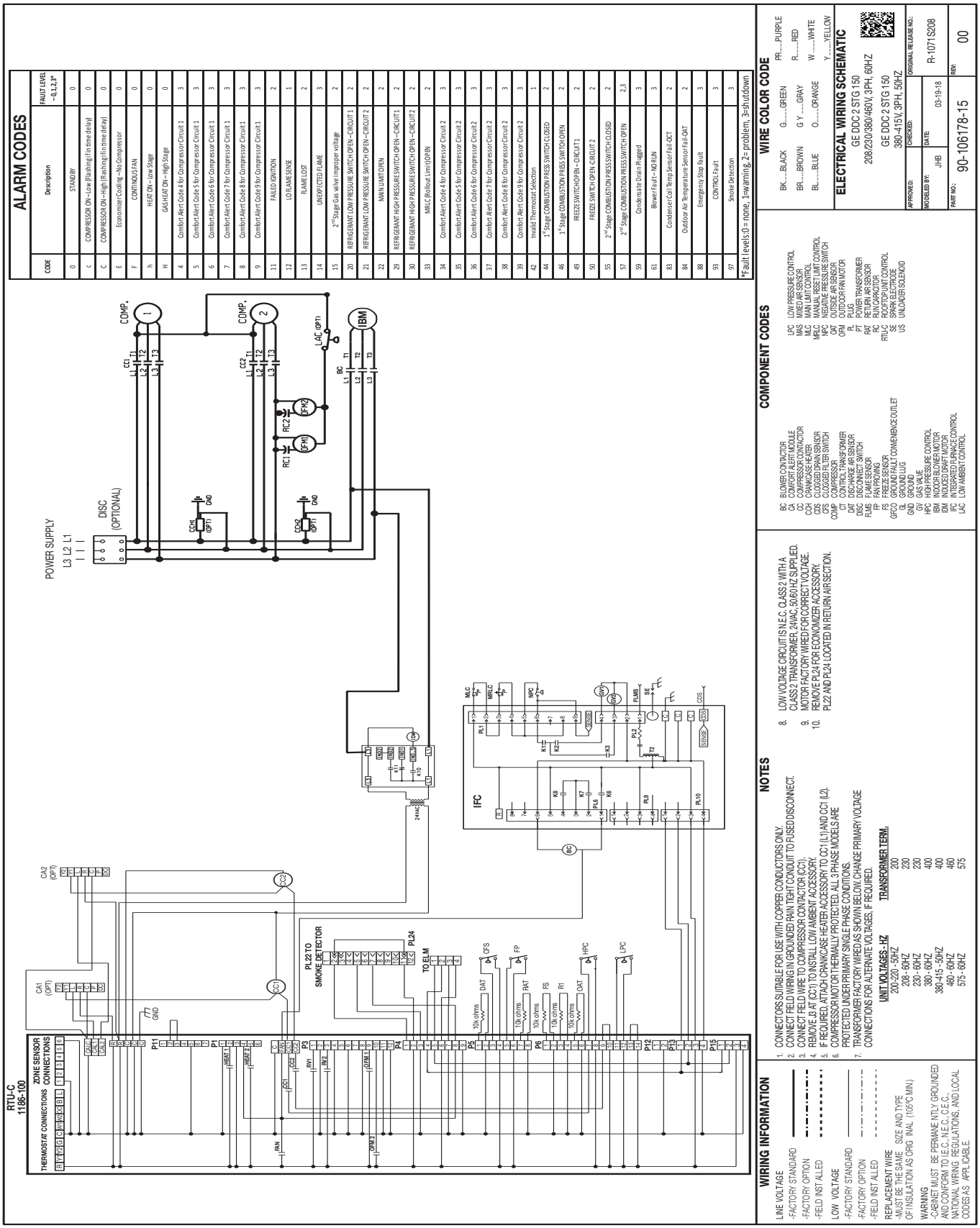

P. APPENDICES

Appendix G. Wiring Diagrams & Schematics (Cont.)

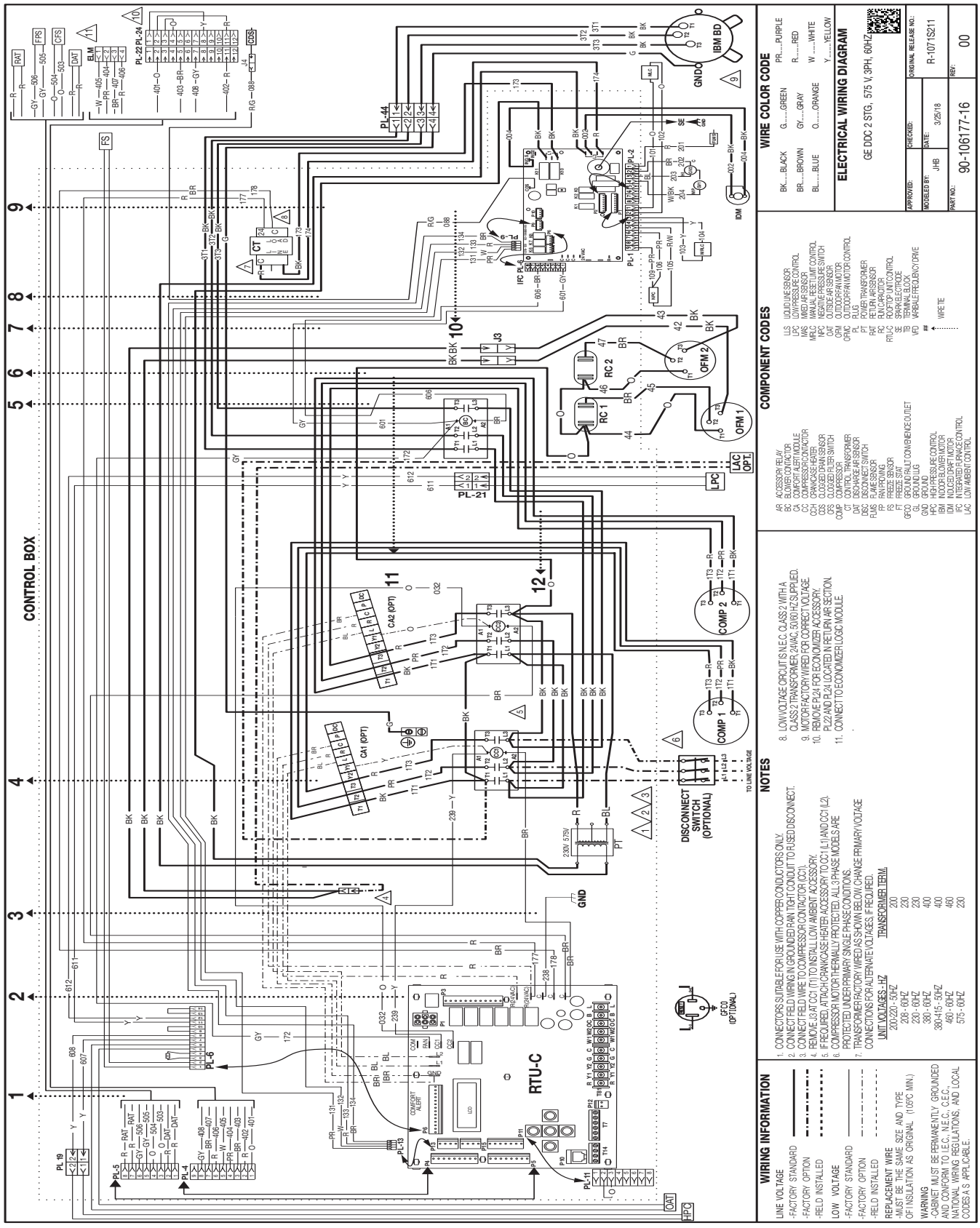

Appendix G. Wiring Diagrams & Schematics (Cont.)

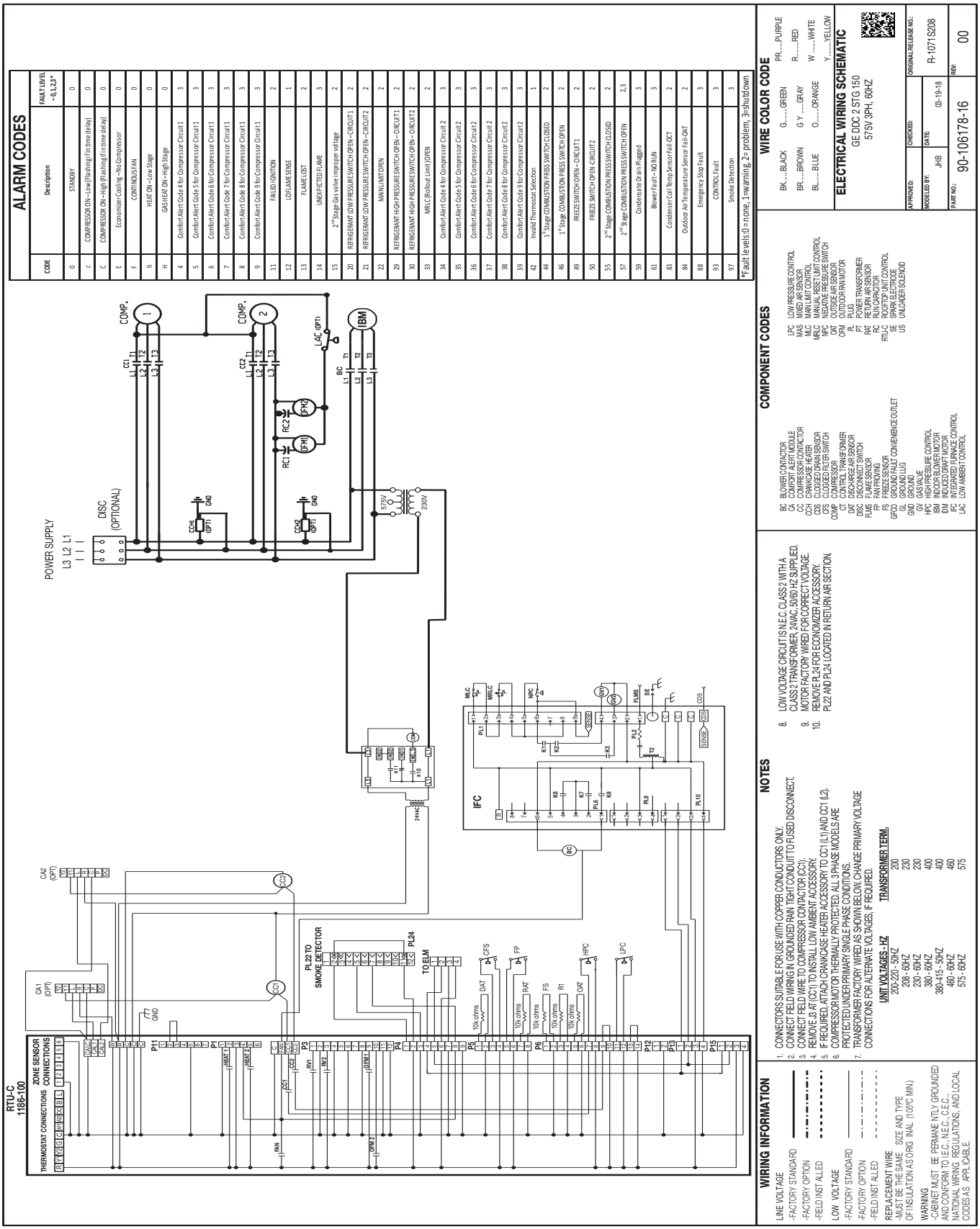

P. APPENDICES

Appendix G. Wiring Diagrams & Schematics (Cont.)

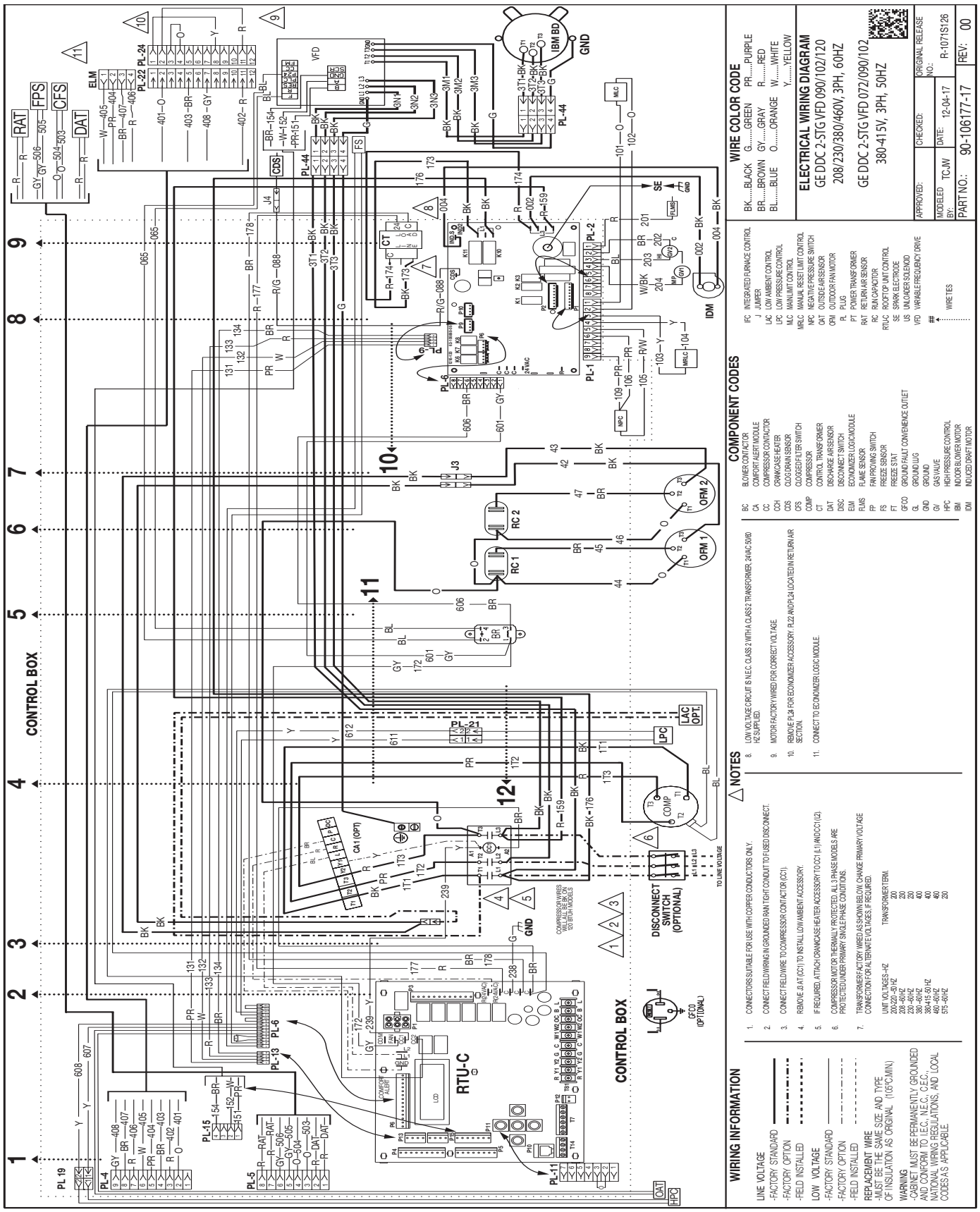

Appendix G. Wiring Diagrams & Schematics (Cont.)

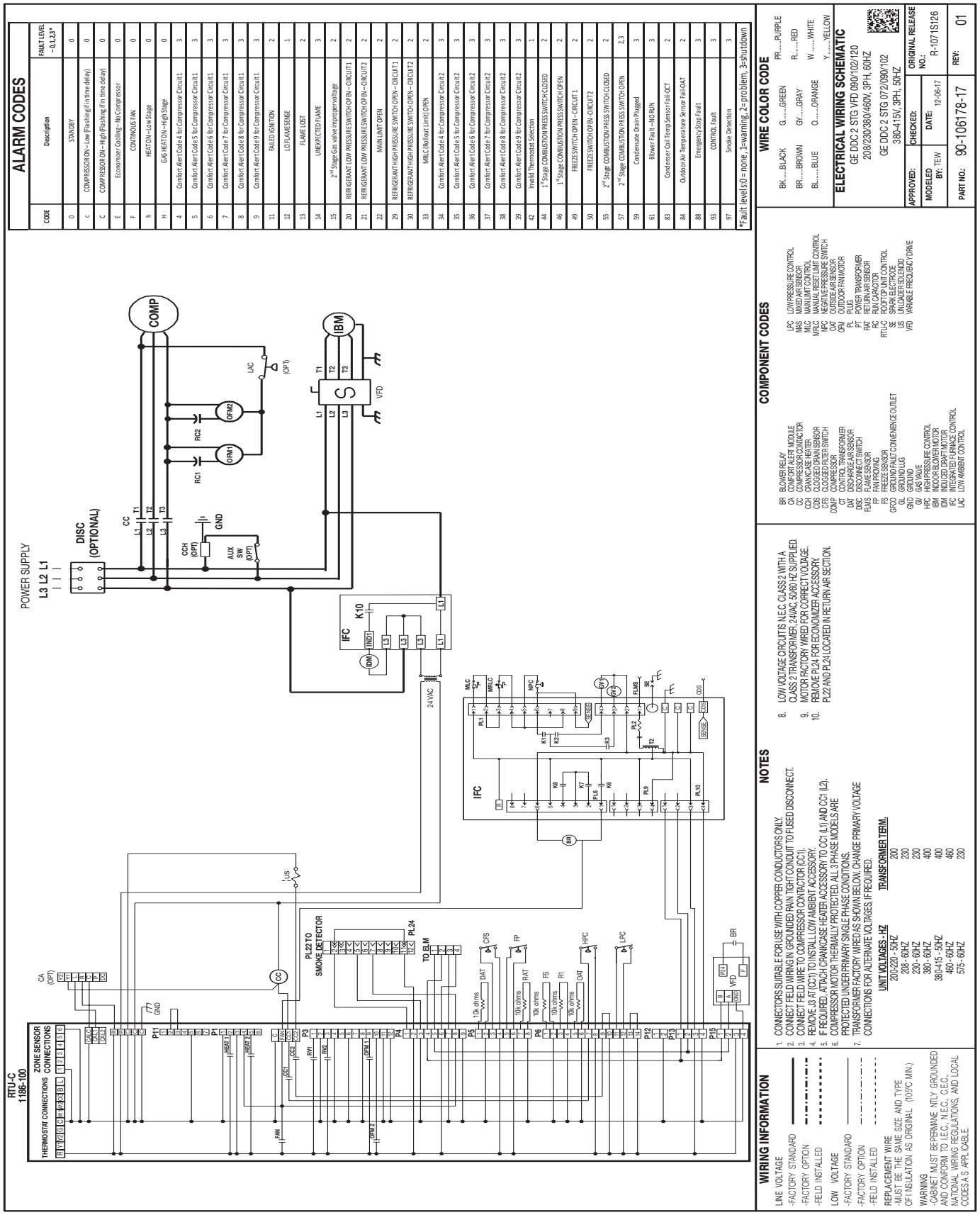

P. APPENDICES

Appendix G. Wiring Diagrams & Schematics (Cont.)

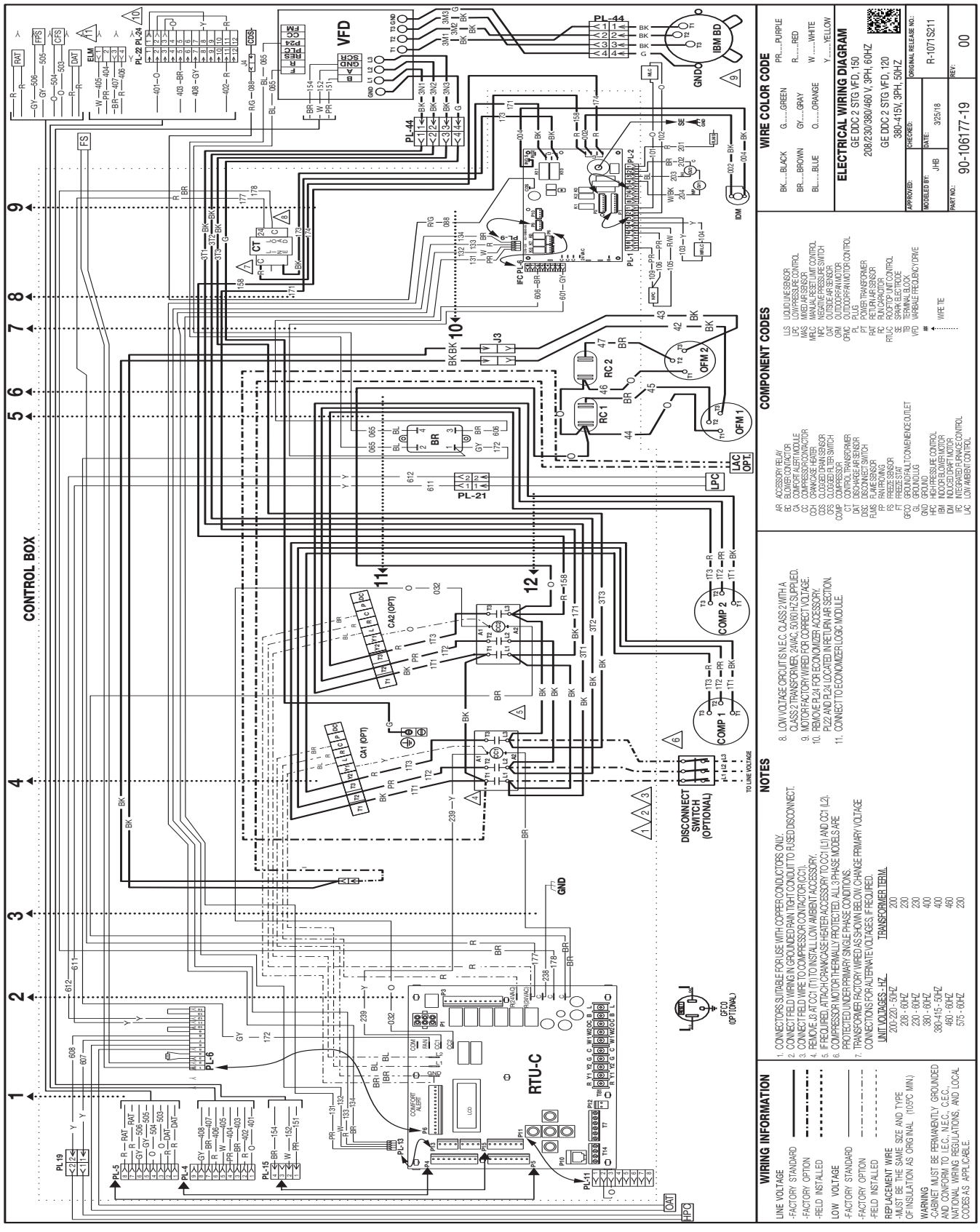

Appendix G. Wiring Diagrams & Schematics (Cont.)

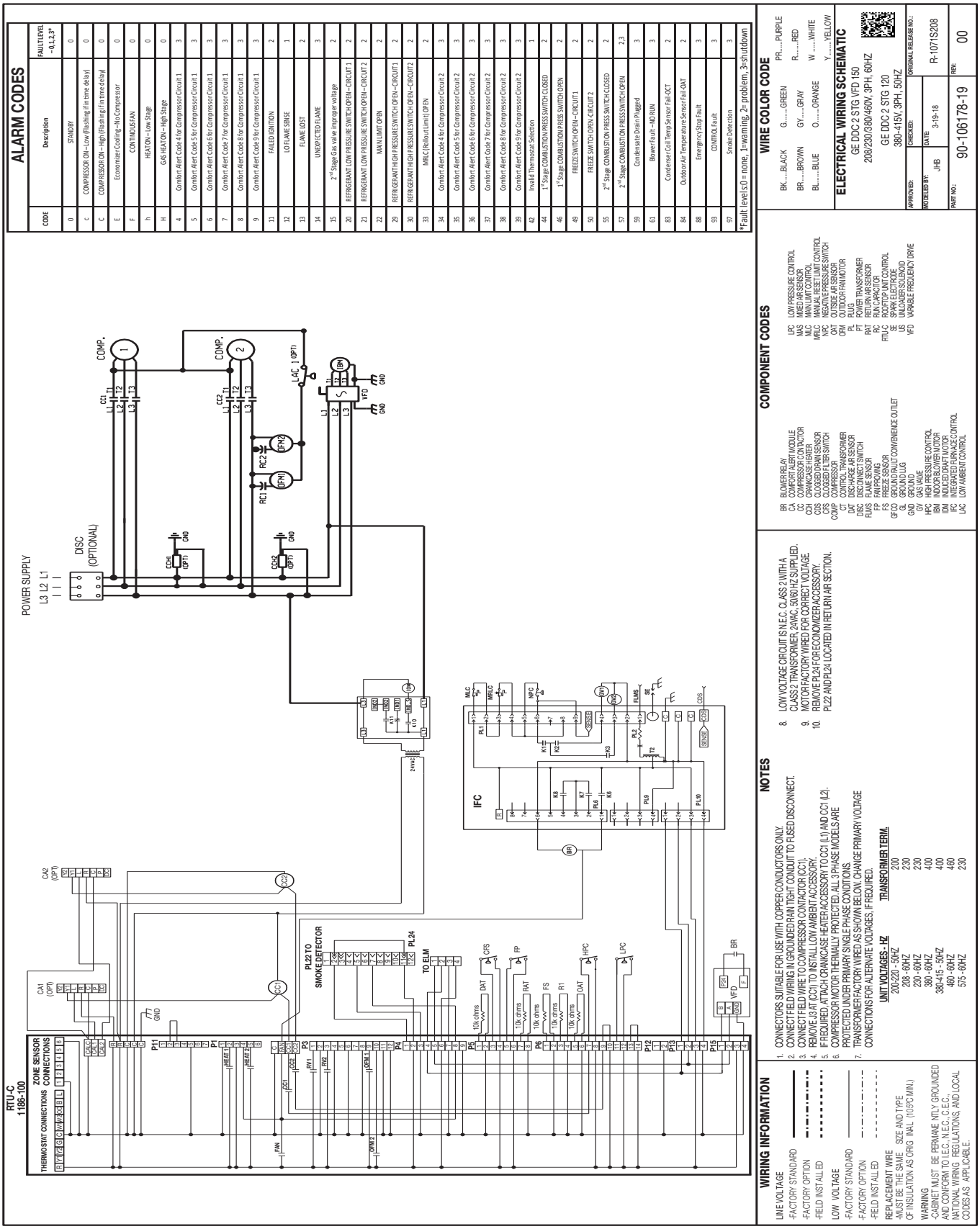

R. INFORMATION FOR THE OWNER

R.1. Information for the Owner: Maintenance and service

For routine maintenance, general diagnostics for cooling and heating, and other generalized information regarding filter c h anging, cleaning the condensate pan, cleaning the coils, and general inspections, refer to the included User's Information Manual for the owner.

Manufacturer Part number: 92-106167-01

R.2. Product Model and Serial Number

The product model and serial number are both located on the rating plate found on the supply/ return panel of the unit.

S. INSTALLATION CHECK LIST AND JOB SITE SHEET

Commercial Job Site Information

Site Information and Application Details:

Business Name : _____

Address : _____

City : _____ State : _____ Zip : _____

Site Contact : _____

Phone : _____ Mobile : _____

Email : _____

Model Number : _____

(Please include all letters and digits of the model number)

Serial Number : _____

(Please include all letters and digits of the serial number)

Date of Install : _____

(When was the unit installed, month, day, and year)

Business Name : _____

Address : _____

City : _____ State : _____ Zip : _____

Site Contact : _____

Phone : _____ Mobile : _____

Email : _____

Technician Name : _____

Visit Date: _____

Technician Name : _____

Visit Date: _____

Technician Name : _____

Visit Date: _____

Distributor and Support Details:

Distributor Name : _____

City : _____ State : _____

Rep Name : _____

Visit Date: _____

Unit Setup and Operational Information

Voltage and Amperage Information :

Line Voltage Measurements :

Base Voltage : 208 240 460 (Circle one) Phase : 1 3 (Circle one)

Measured Line Voltage :

Phase A to B : _____ Phase A to Ground : _____

Phase B to C : _____ Phase B to Ground : _____

Phase C to A : _____ Phase C to Ground : _____

Breaker Size : _____ Conductor Size: _____

24VAC Low Voltage Measurements :

Transformer Tap : 208 240 460 (Circle one)

24VAC Measured Voltage : R to C : _____

24VAC Measured Amp Load :

Transformer Load: _____

T-stat Load: _____

Amperage and Power Measurements :

	Full Running Load	Blower	Compressor 1	Compressor 2	Outdoor Fans
Phase A :					
Phase B :					
Phase C :					

Circuit 1 :

Suction Line	Liquid Line
Pressure (PSI) :	Pressure (PSI) :
Temperature (°F) :	Temperature (°F) :
Superheat (°F) :	Sub-cooling (°F) :

Circuit 2 :

Suction Line	Liquid Line
Pressure (PSI) :	Pressure (PSI) :
Temperature (°F) :	Temperature (°F) :
Sub-cooling (°F) :	Sub-cooling (°F) :

Outdoor Air Temperature (°F) : _____ Return Air Temperature (°F) : _____ Supply Air Temperature (°F) : _____

Outdoor Air Wet Bulb (°F) : _____ Return Air Wet Bulb (°F) : _____ Supply Air Wet Bulb (°F) : _____

S. INSTALLATION CHECK LIST AND JOB SITE SHEET

Commercial Job Site Information

Air Flow CFM :

Building Design CFM : _____

Operating System CFM : _____

Blower Speed :

Motor RPM : _____

Blower RPM : _____

Blower Sheave Turns : _____

(Turns are measured from a fully closed position)

Static Pressure :

Return Static Pressure : _____

Supply Static Pressure : _____

Total Static Pressure : _____

Variable Frequency Drive (VFD) : (low fan speed settings are located in DDC Control)

Factory Equiped: Yes No (Circle one)

Active VFD Display (Hz) : _____

LOC/REM Light On?: Yes No (Circle one)

Power Setting (uLu) : _____

Runs to 45hz on Start?: Yes No (Circle one)

Runs to 60hz 2nd Stage?: Yes No (Circle one)

Low Fan Speed % : _____

1stg Cooling Speed % : _____

Low Economizer % : _____

Economizer Setup and Information :

Outdoor Air:

Design CFM : _____

Design % : _____

Measured CFM : _____

Measured % : _____

Blade Position and Settings:

Minimum Position - Low : _____

Minimum Position - High : _____

Min Position Shaft Angle : _____

Measured % : _____

Program Settings:

Enthalpy Zone Setting : A B C D E (Circle one)

Mixed Air Temperature : _____

Min Position Shaft Angle : _____

Measured % : _____

Heat or Furnace Information :

Gas Heat :

Fuel Type : Natural LP (Circle one)

Input BTU : _____

Measured BTU : _____

Line Gas Pressure : _____

Manifold Pressure - Low : _____

Manifold Pressure - High : _____

Number of Orifices : _____

Orifice Size : _____

Flame Signal - microamp (s) : _____

	Voltage: Line 1	Voltage: Line 2	Amperage: Line 1	Amperage: Line 2	RPM	Pressure Switches (measured in inches w.c.) Low	High	Close	Open
Inducer 1:									
Inducer 2:									
Inducer 3:									
Inducer 4:									

Main Limit Closed: Yes No (Circle one)

Over Temp Limit Closed: Yes No (Circle one)

Spark Visible at Igniter : Yes No (Circle one)

Burner Flames Blue : Yes No (Circle one)

Electric Heat :

System Voltage : 208 240 460 (Circle one)

Total Kw input Rating : _____

	Stage 1 Amps:	Stage 2 Amps:	Stage 1 Watts:	Stage 2 Watts:
Phase A :				
Phase B :				
Phase C :				

Notes and Comments :



A NIBE GROUP MEMBER

7300 S.W. 44th Street
Oklahoma City, OK 73179
Phone: 405-745-6000
Fax: 405-745-6058
climatemaster.com

97B0055N16 | CM 0522

ClimateMaster works continually to improve its products. As a result, the design and specifications of each product at the time for order may be changed without notice and may not be as described herein. Please contact ClimateMaster's Customer Service Department at 1-405-745-6000 for specific information on the current design and specifications. Statements and other information contained herein are not express warranties and do not form the basis of any bargain between the parties, but are merely ClimateMaster's opinion or commendation of its products.